DIST	COUNTY	ROUTE	KILOMETER POST TOTAL PROJECT	SHEET NO.	TOTAL SHEETS

Caltrans Metric

REGISTERED CIVIL ENGINEER

July 1, 1999
PLANS APPROVAL DATE

REGISTERED PROFESSIONAL ENGINEER Glenn DeCou No. C34547 Exp. 9-30-99 CIVIL STATE OF CALIFORNIA

The State of California or its officers or agents shall not be responsible for the accuracy or completeness of electronic copies of this plan sheet.

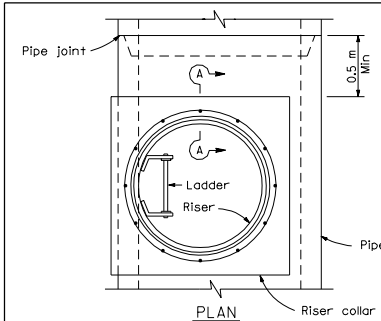

PLAN

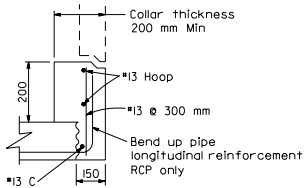

SECTION A-A

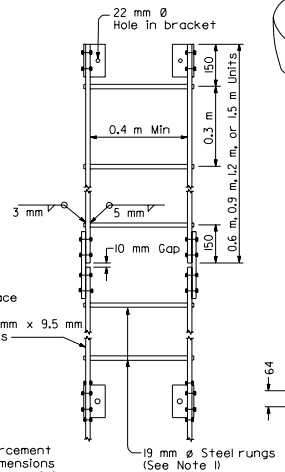

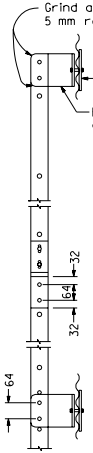

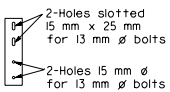

LADDER SPLICE PLATE
64 mm x 9.5 mm x 0.25 m
See Note 4

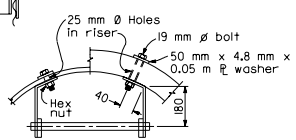

LADDER CONNECTION TO RISER

LADDER DETAILS
See Notes 2, 3 and 7

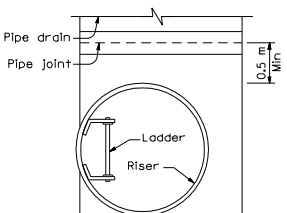

PLAN

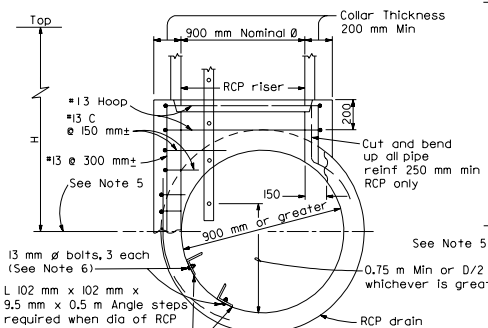

WITH 900 mm RCP RISER

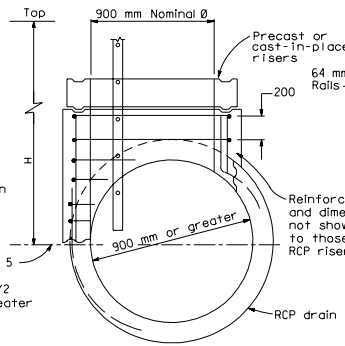

WITH 900 mm PRECAST RISERS

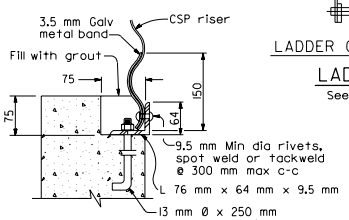

DETAIL A

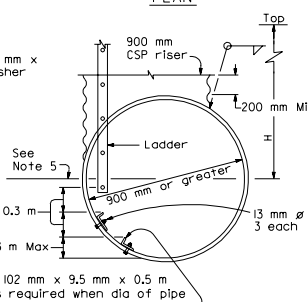

WITH 900 mm CSP RISER

CORRUGATED STEEL PIPE OR STRUCTURAL PLATE PIPE DRAIN

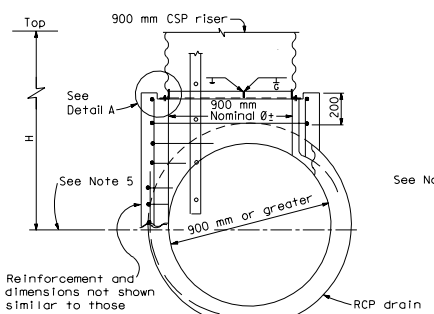

WITH 900 mm CSP RISER

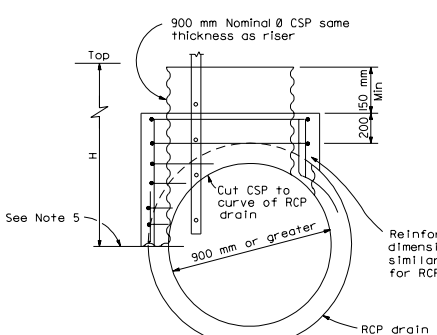

WITH 900 mm CSP RISER
ALTERNATIVE COLLAR DETAIL

REINFORCED CONCRETE PIPE DRAIN

NOTES

1. Galvanizing: See Standard Specifications or Special Provisions. All hardware to be galvanized after fabrication.
2. Ladder may be constructed in one length at contractor's option on reinforced concrete pipe risers.
3. On corrugated steel pipe riser, connect ladder splice plate so joint can compress 10 mm.
4. Ladder splice plate to be connected with 13 mm ø bolts with double nuts.
5. Pay limit for 900 mm risers to centerline of cross pipe.
6. Where angle steps are required, the lowest angle shall not be more than 0.3 m above the flowline of the drain. The distance between angle steps and between the uppermost angle step and the lowest rung of the ladder shall not exceed 0.3 m. Power driven fasteners, equivalent to the 13 mm ø bolts shown, may be used for fixing the angle steps to the wall of the reinforced concrete pipe drain.
7. Install ladder so that the highest rung is not more than 0.3 m below the top of the riser.

STATE OF CALIFORNIA
DEPARTMENT OF TRANSPORTATION

PIPE RISER CONNECTIONS

NO SCALE

ALL DIMENSIONS ARE IN MILLIMETERS UNLESS OTHERWISE SHOWN

D93A

1999 STD. PLAN D93A