DIST	COUNTY	ROUTE	KILOMETER POST TOTAL PROJECT	SHEET NO.	TOTAL SHEETS

Caltrans Metric

Paul Cotter
REGISTERED CIVIL ENGINEER

July 1, 1999
PLANS APPROVAL DATE

REGISTERED PROFESSIONAL ENGINEER Paul Cotter No. 34509 Exp. 9-30-99 CIVIL STATE OF CALIFORNIA

The State of California or its officers or agents shall not be responsible for the accuracy or completeness of electronic copies of this plan sheet.

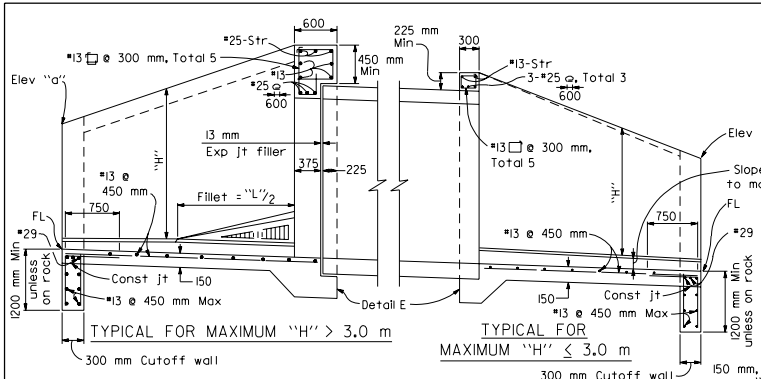

TYPICAL FOR MAXIMUM "H" > 3.0 m

TYPICAL FOR MAXIMUM "H" ≤ 3.0 m

PART LONGITUDINAL SECTION

NOTE

RCP shown. Metal pipe similar except eliminate the expansion joint and use hook bolts @ 480 mm± spacing. Size and length provided by manufacturer.

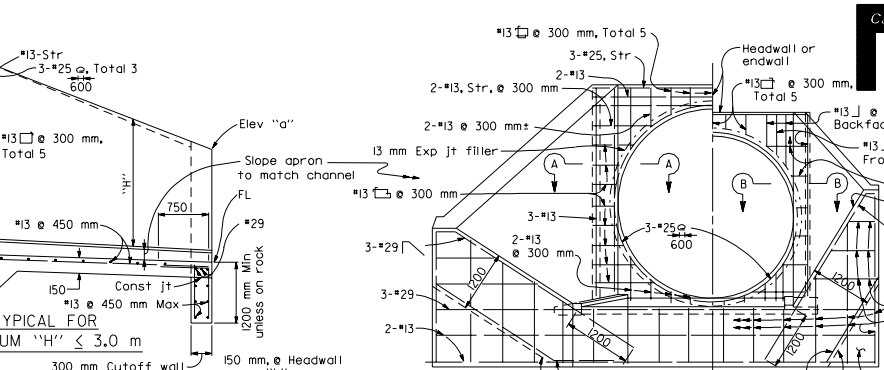

TYPICAL FOR MAXIMUM "H" > 3 m

TYPICAL FOR MAXIMUM "H" ≤ 3 m

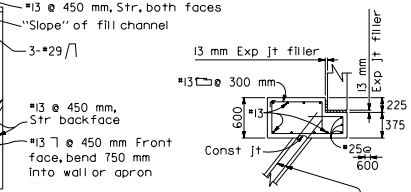

SECTION A-A

END ELEVATION

If at upstream end, fillet is not shown

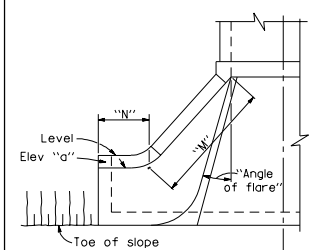

ALTERNATIVE WARPED WINGWALL

Use where additional protection to toe of embankment is required. If at upstream end, fillet is not shown.

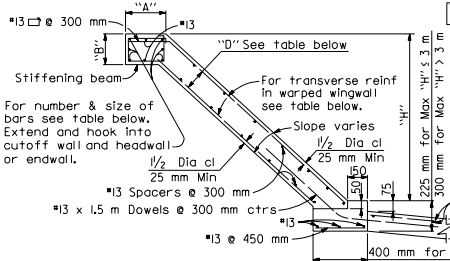

SECTION C-C

Where abrasion is anticipated, increase apron thickness to 175 mm minimum to provide 50 mm minimum reinforcement coverage.

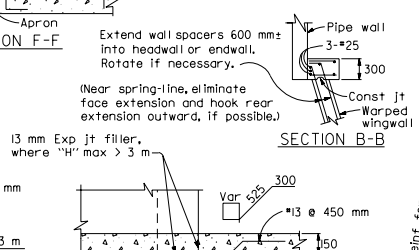

SECTION F-F

SECTION B-B

DETAIL E

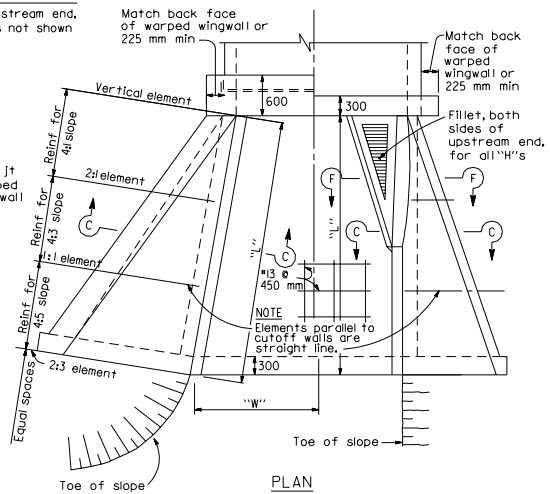

PLAN

STATE OF CALIFORNIA
DEPARTMENT OF TRANSPORTATION

PIPE CULVERT HEADWALLS, ENDWALLS AND WARPED WINGWALLS

NO SCALE

ALL DIMENSIONS ARE IN MILLIMETERS UNLESS OTHERWISE SHOWN

D86B

1999 STD. PLAN D86B

WARPED WINGWALLS

WALL DIMENSIONS AND REINFORCING								
Element Slope	"H"	2.4 m or less	3.0 m	3.7 m	4.3 m	4.9 m	5.5 m	6.1 m
4:1	Front face reinf	#13@300	#13@175	#16@175	#16@125	#19@150	#22@175	#22@150
	Rear face reinf	#13@300	#13@300	#13@300	#13@300	#13@300	#13@300	#13@300
4:3	Front face reinf	#13@300	#13@300	#13@300	#13@300	#13@250	#13@200	#13@150
	Rear face reinf	#13@300	#13@300	#13@300	#13@250	#13@175	#13@150	#16@200
4:5	Front face reinf	#13@300	#13@300	#13@300	#13@300	#13@300	#13@300	#13@300
	Rear face reinf	#13@200	#13@200	#13@125	#16@150	#19@175	#19@150	#22@150
"D" at Cutoff Wall (mm)		150	150	150	190	200	240	280
"D" at Culvert (mm)		150	150	150	200	240	280	330

STIFFENING BEAM DIMENSIONS AND REINFORCING									
"H" Max \ "L"	3.7 m	4.3 m	4.9 m	5.5 m	6.1 m	7.6 m	9.1 m	10.7 m	12.2 m or more
1.8 m	No beam. Place 2-#19 in each face along top of wall.								
2.4 m				"A" = 300					
3.0 m				"B" = 225					
3.7 m						"A" = 450			
4.3 m	Total 6-#19				"B" = 300			"A" = 560	
4.9 m				Total 6-#22			"B" = 300		"A" = 600
5.5 m						Total 6-#25		"B" = 450	
6.1 m							Total 8-#29		

NOTES Walls designed for 600 mm surcharge; earth density = 1900 kg/m³ ; equivalent fluid pressure = 5.66 kPa/m.
Vary "D" of warped wall uniformly from that at cutoff wall to that at headwall or endwall, for maximum "H" > 3.7m.
Dimensions "L", "W", "H", "M", "N", Elevation "a", "Angle of flare", and end "Slope" (as apply) are shown on the plans.