DIST	COUNTY	ROUTE	KILOMETER POST TOTAL PROJECT	SHEET NO.	TOTAL SHEETS

Caltrans Metric

Paul Cotter
REGISTERED CIVIL ENGINEER

July 1, 1999
PLANS APPROVAL DATE

REGISTERED PROFESSIONAL ENGINEER — Paul Cotter — No. 34509 — Exp. 9-30-99 — CIVIL — STATE OF CALIFORNIA

The State of California or its officers or agents shall not be responsible for the accuracy or completeness of electronic copies of this plan sheet.

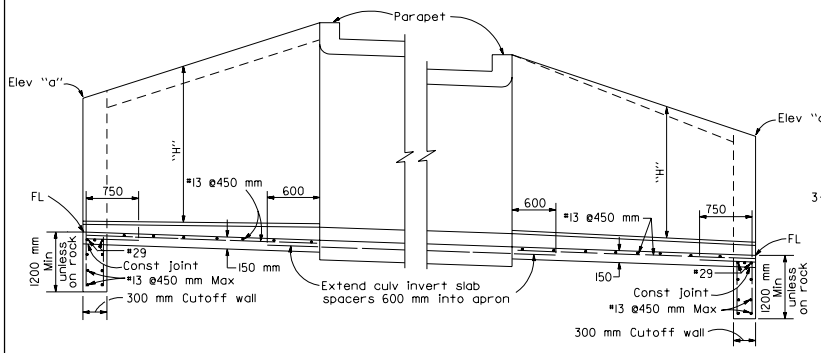

TYPICAL WITH STIFFENING BEAM TYPICAL WITHOUT STIFFENING BEAM

PART LONGITUDAL SECTION

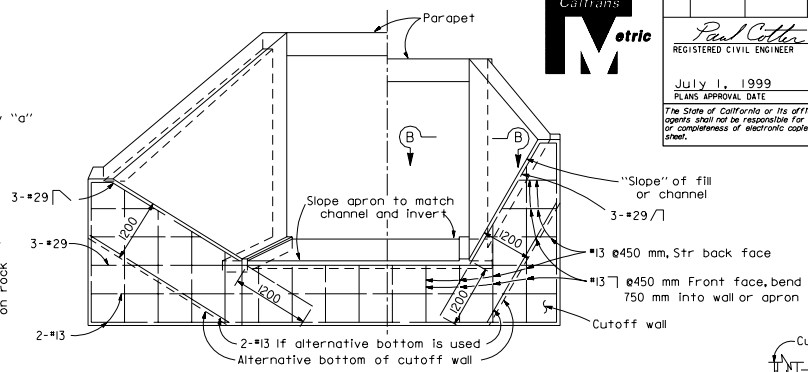

END ELEVATION

WITHOUT STIFFENING BEAM

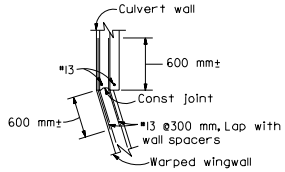

SECTION B-B

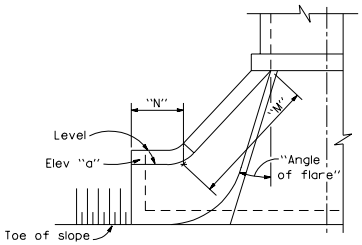

ALTERNATIVE WARPED WINGWALL

Use where additional protection to toe of embankment is required.

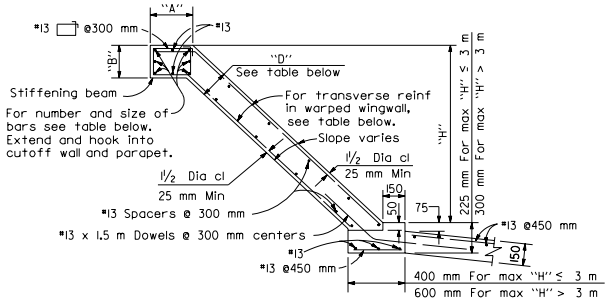

SECTION C-C

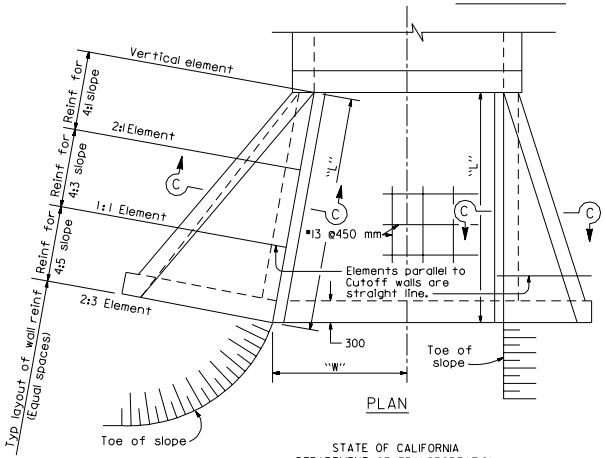

PLAN

WARPED WINGWALLS

WALL DIMENSIONS AND REINFORCING								
Element Slope	"H"	2.4 m or less	3.0 m	3.7 m	4.3 m	4.9 m	5.5 m	6.1 m
4:1	Front face reinf	#13@300	#13@175	#16@175	#16@125	#19@150	#22@175	#22@150
	Rear face reinf	#13@300	#13@300	#13@300	#13@300	#13@300	#13@300	#13@300
4:3	Front face reinf	#13@300	#13@300	#13@300	#13@300	#13@250	#13@200	#13@150
	Rear face reinf	#13@300	#13@300	#13@300	#13@250	#13@175	#13@150	#16@200
4:5	Front face reinf	#13@300	#13@300	#13@300	#13@300	#13@300	#13@300	#13@300
	Rear face reinf	#13@200	#13@200	#13@125	#16@150	#19@175	#19@150	#22@150
"D" at Cutoff Wall (mm)		150	150	150	190	200	240	280
"D" at Culvert (mm)		150	150	150	200	240	280	330

STIFFENING BEAM DIMENSIONS AND REINFORCING										
"H" Max \ "L"	3.7 m	4.3 m	4.9 m	5.5 m	6.1 m	7.6 m	9.1 m	10.7 m	12.2 m or more
1.8 m	No beam. Place 2-#19 in each face along top of wall.								
2.4 m									
3.0 m			"A"= 300						
3.7 m			"B"= 225			"A"= 450			
4.3 m	Total 6-#19			"B"= 300				"A"= 560	
4.9 m							"B"= 300	"A"= 600	
5.5 m			Total 6-#22			Total 6-#25	"B"= 450		
6.1 m						Total 8-#29			

NOTES
Walls designed for 600 mm surcharge; earth density = 1900 kg/m³ ; equivalent fluid pressure = 5.66 KPa/m.
Vary "D" of warped wall uniformly from that at cutoff wall to that at culvert, for maximum "H" > 3.7m.
Where abrasion is anticipated increase apron thickness to 175 mm minimum to provide 50 mm minimum reinforcement coverage.
Dimensions "L", "W", "H", "M", "N", Elevation "a", "Angle of flare", and end "Slope" (as apply) are shown on the plans.

STATE OF CALIFORNIA
DEPARTMENT OF TRANSPORTATION

BOX CULVERT WARPED WINGWALLS

NO SCALE

ALL DIMENSIONS ARE IN MILLIMETERS UNLESS OTHERWISE SHOWN

D86A

1999 STD. PLAN D86A