DIST	COUNTY	ROUTE	KILOMETER POST TOTAL PROJECT	SHEET NO.	TOTAL SHEETS

Caltrans Metric

REGISTERED CIVIL ENGINEER

July 1, 1999
PLANS APPROVAL DATE

REGISTERED PROFESSIONAL ENGINEER R. C. Anderson No. 17180 Exp. 6-30-01 CIVIL STATE OF CALIFORNIA

The State of California or its officers or agents shall not be responsible for the accuracy or completeness of electronic copies of this plan sheet.

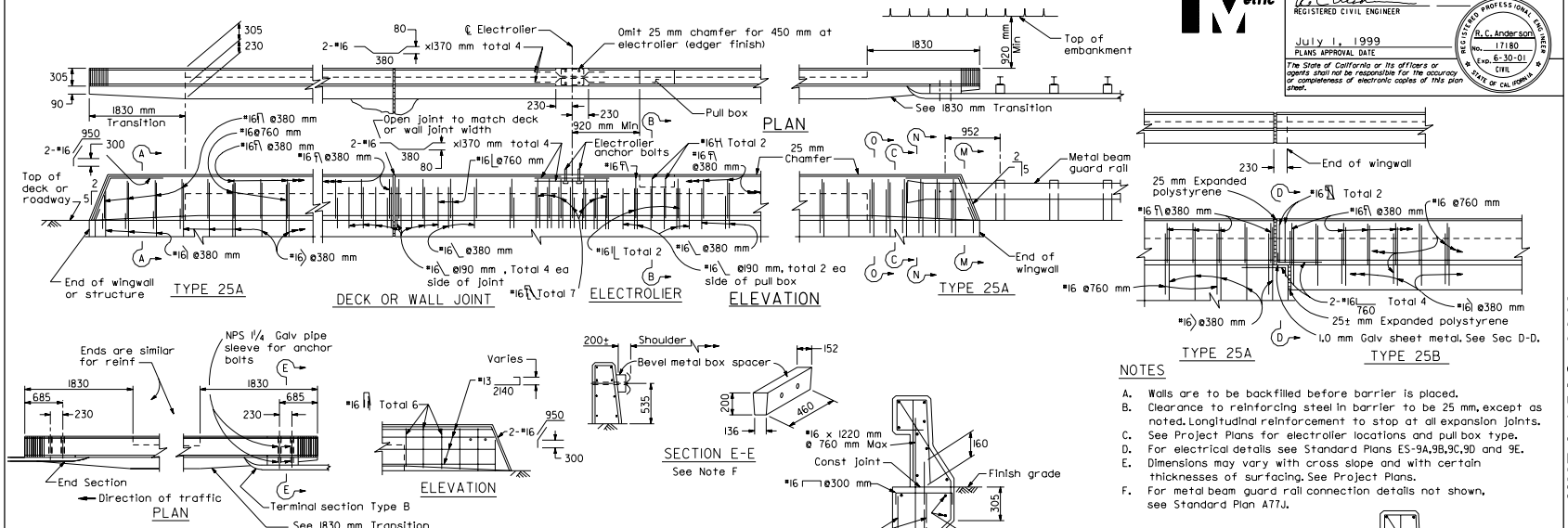

NOTES

A. Walls are to be backfilled before barrier is placed.
B. Clearance to reinforcing steel in barrier to be 25 mm, except as noted. Longitudinal reinforcement to stop at all expansion joints.
C. See Project Plans for electrolier locations and pull box type.
D. For electrical details see Standard Plans ES-9A,9B,9C,9D and 9E.
E. Dimensions may vary with cross slope and with certain thicknesses of surfacing. See Project Plans.
F. For metal beam guard rail connection details not shown, see Standard Plan A77J.

STATE OF CALIFORNIA
DEPARTMENT OF TRANSPORTATION

CONCRETE BARRIER TYPE 25

NO SCALE

ALL DIMENSIONS ARE IN MILLIMETERS UNLESS OTHERWISE SHOWN

B11-53

1999 STD. PLAN B11-53