DIST	COUNTY	ROUTE	KILOMETER POST TOTAL PROJECT	SHEET NO.	TOTAL SHEETS

Caltrans Metric

REGISTERED CIVIL ENGINEER

July 1, 1999
PLANS APPROVAL DATE

REGISTERED PROFESSIONAL ENGINEER
Glenn DeCou
No. C34547
Exp. 9-30-99
CIVIL
STATE OF CALIFORNIA

The State of California or its officers or agents shall not be responsible for the accuracy or completeness of electronic copies of this plan sheet.

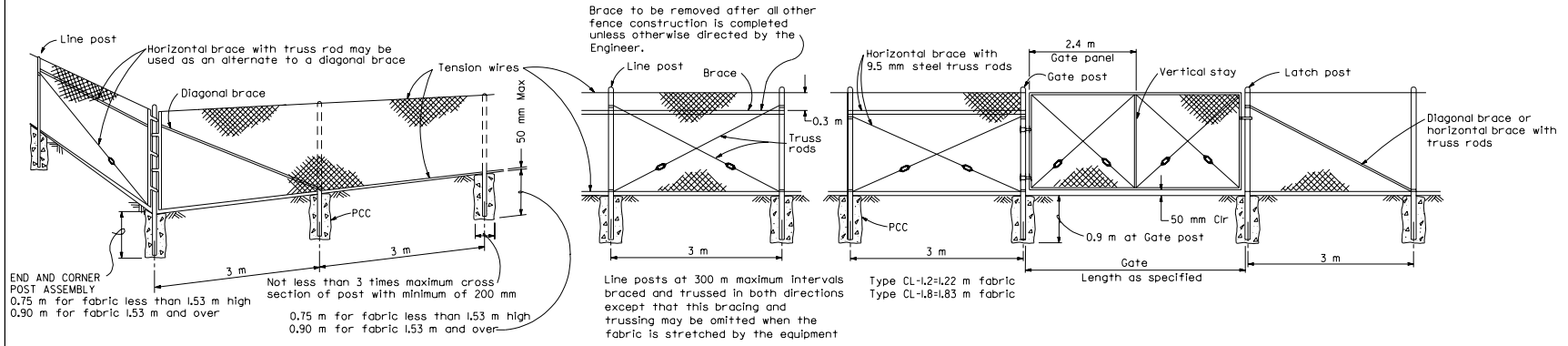

GATE POST			
FENCE HEIGHT	GATE WIDTHS (m)	NOMINAL ID (mm)	MASS PER METER (kg)
1.83 m and Less	Up thru 1.83	65	7.37
	Over 1.83 thru 3.66	100	16.06
	Over 3.66 thru 5.49	125	21.76
	Over 5.49 to 7.32 max	150	28.23
Over 1.83 m	Up thru 1.83	80	11.28
	Over 1.83 thru 3.66	125	21.76
	Over 3.66 thru 5.49	150	28.23
	Over 5.49 to 7.32 max	200	42.49

Above post dimensions and masses are minimums. Larger sizes may be used on approval of the Engineer.

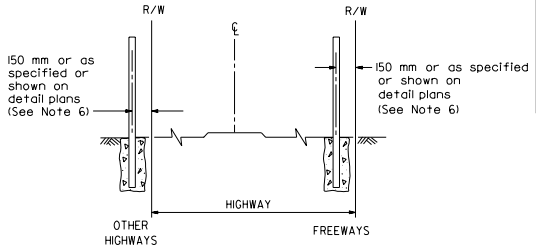

FENCE LOCATION

TYPICAL MEMBER DIMENSIONS (See Notes)										
FENCE HEIGHT	LINE POSTS			END, LATCH & CORNER POSTS			BRACES			
	ROUND ID	H	ROLL FORMED	ROUND ID	ROLL FORMED		ROUND ID	H	ROLL FORMED	
1.83 m & less	40	48 x 41	48 x 41	50	89 x 89	51 x 44	32	38 x 33	41 x 32	44 x 32
Over 1.83 m	50	57 x 51	51 x 44	63	89 x 89	63 x 63	32	38 x 33	41 x 32	44 x 32

NOTES

1. The above table shows examples of post and brace sections which may comply with the Specifications.
2. Sections shown in the tables must also comply with the strength requirements and other provisions of the Specifications.
3. Other sections which comply with the strength requirements and other provisions of the Specifications may be used on approval of the Engineer.
4. Options exercised shall be uniform on any one project.
5. Dimensions shown are nominal.
6. Offset to be 0.60 m at monument locations, measured at right angles to R/W lines. Taper to achieve offset to be at least 6 m long.

STATE OF CALIFORNIA
DEPARTMENT OF TRANSPORTATION

CHAIN LINK FENCE

NO SCALE

ALL DIMENSIONS ARE IN MILLIMETERS UNLESS OTHERWISE SHOWN

A85

1999 STD. PLAN A85