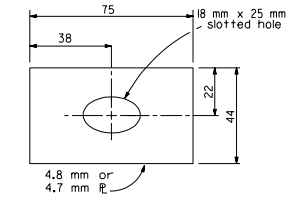


FLAT PLATE WASHER

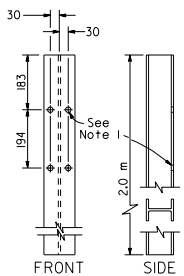


STEEL POST

MW 150 x 14 or MW 150 x 22

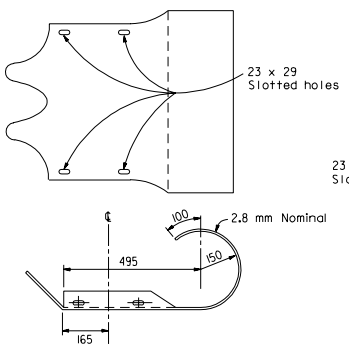


TERMINAL SECTION

See Note 2

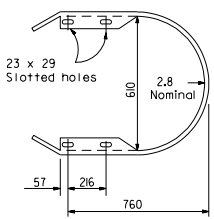


RETURN SECTION

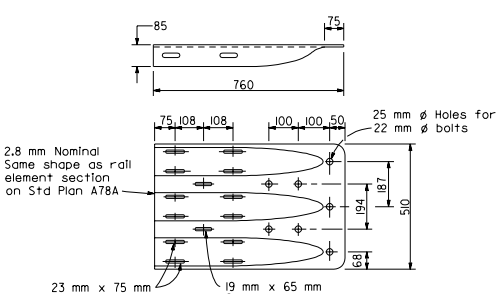


TERMINAL CONNECTOR

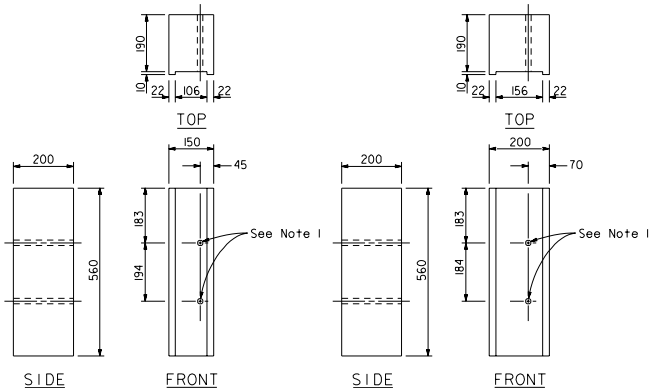


150 mm x 200 mm NOTCHED WOOD BLOCK

See Notes 4 and 6

200 mm x 200 mm NOTCHED WOOD BLOCK

See Notes 5 and 6

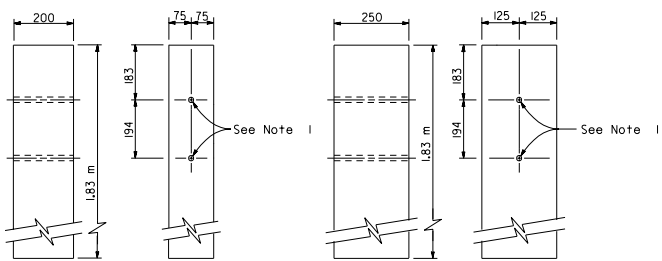


150 mm x 200 mm WOOD POST

250 mm x 250 mm WOOD POST

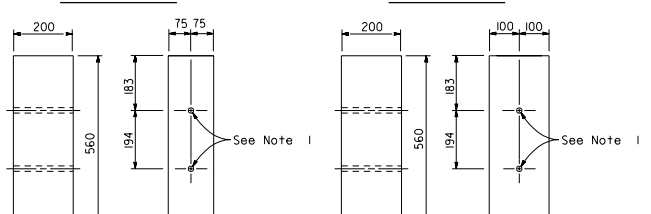


150 mm x 200 mm WOOD BLOCK

200 mm x 200 mm WOOD BLOCK

Caltrans Metric

| DIST | COUNTY | ROUTE | KILOMETER POST TOTAL PROJECT | SHEET NO. | TOTAL SHEETS |
|---|---|---|---|---|---|
| | | | | | |

REGISTERED CIVIL ENGINEER

July 1, 1999

PLANS APPROVAL DATE

REGISTERED PROFESSIONAL ENGINEER Ellis K. Hirst No. C17926 Exp. 6-30-01 CIVIL STATE OF CALIFORNIA

*The State of California or its officers or agents shall not be responsible for the accuracy or completeness of electronic copies of this plan sheet.*

## NOTES

1. All holes in steel post to be 21 mm dia maximum. Holes in wood posts and wood blocks to be 20 mm ø ±1.6 mm.
2. Terminal sections not to be installed on the trailing end of single thrie beam barrier constructed adjacent to one-way roadways.
3. Dimensions shown for wood post are nominal.
4. For use with MW 150 x 14 steel post.
5. For use with MW 150 x 22 steel post.
6. Notched face of wood block faces steel post.
7. Direction of traffic indicated by →

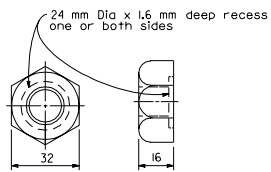


16 mm ø RECESS NUT

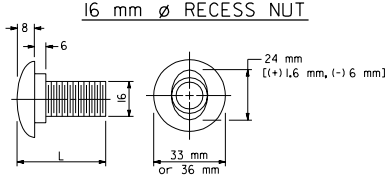


16 mm ø BUTTON HEAD BOLT

| L | THREAD LENGTH |
|---|---|
| 35 mm | full thread length |
| 50 mm | full thread length |
| 255 mm | 100 mm Min thread length |
| 460 mm | 100 mm Min thread length |

STATE OF CALIFORNIA
DEPARTMENT OF TRANSPORTATION

# THRIE BEAM BARRIER POSTS, BLOCKS AND STANDARD HARDWARE DETAILS

NO SCALE

ALL DIMENSIONS ARE IN MILLIMETERS UNLESS OTHERWISE SHOWN

**A78C**

**1999 STD. PLAN A78C**