The State of California or its officers or agents shall not be responsible for the accuracy or completeness of electronic copies of this plan sheet.

Caltrans Metric

DIST	COUNTY	ROUTE	KILOMETER POST TOTAL PROJECT	SHEET NO.	TOTAL SHEETS

REGISTERED CIVIL ENGINEER

July 1, 1999
PLANS APPROVAL DATE

REGISTERED PROFESSIONAL ENGINEER G.W. Edwards No. C36386 Exp. 6-30-00 CIVIL STATE OF CALIFORNIA

CENTERLINES
(2 LANE HIGHWAYS)

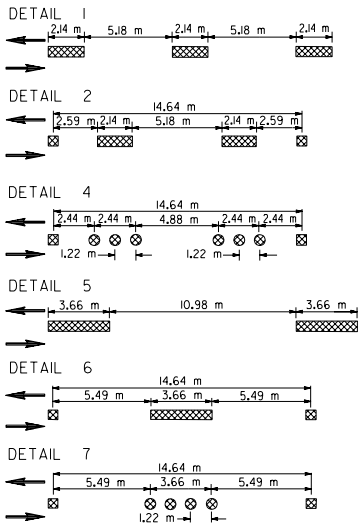

LANELINES
(MULTILANE HIGHWAYS)

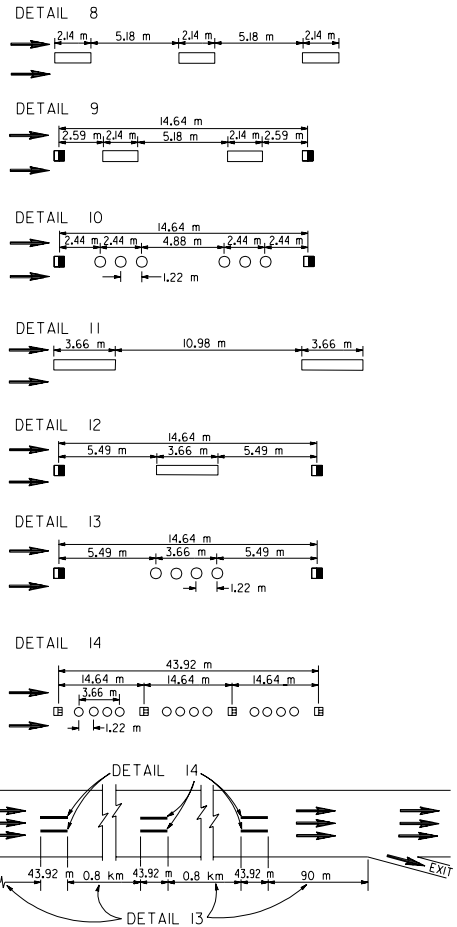

NO PASSING ZONES-ONE DIRECTION

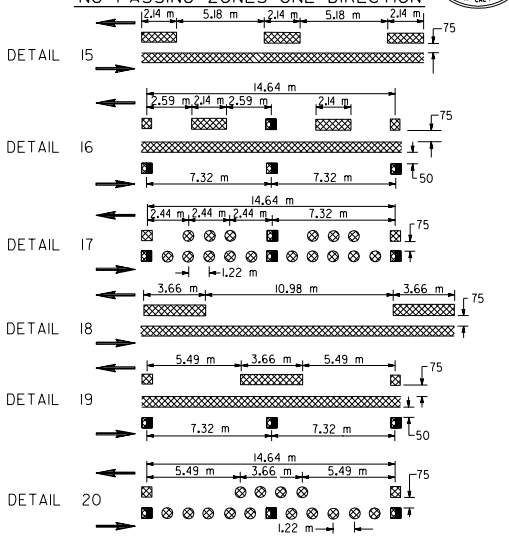

NO PASSING ZONES-TWO DIRECTIONS

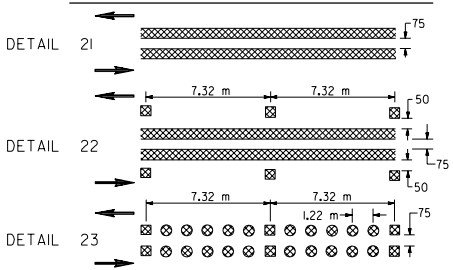

MARKER DETAILS

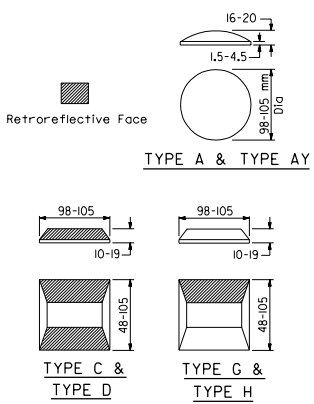

LEGEND

MARKERS

- TYPE A White Non-reflective
- TYPE AY Yellow Non-reflective
- TYPE C Red-clear Retroreflective
- TYPE D Two-way Yellow Retroreflective
- TYPE G One-way Clear Retroreflective
- TYPE H One-way Yellow Retroreflective

LINES

- 100 mm White
- 100 mm Yellow
- Direction of Travel

NOTE

Detail 3 deleted

STATE OF CALIFORNIA
DEPARTMENT OF TRANSPORTATION

PAVEMENT MARKERS AND TRAFFIC LINES TYPICAL DETAILS

NO SCALE

ALL DIMENSIONS ARE IN MILLIMETERS UNLESS OTHERWISE SHOWN

A20A

1999 STD. PLAN A20A