DIST	COUNTY	ROUTE	KILOMETER POST TOTAL PROJECT	SHEET NO.	TOTAL SHEETS

REGISTERED CIVIL ENGINEER

July 1, 2004
PLANS APPROVAL DATE

REGISTERED PROFESSIONAL ENGINEER
Tiliat Sattar
No. C42892
Exp. 03-31-2006
CIVIL
STATE OF CALIFORNIA

The State of California or its officers or agents shall not be responsible for the accuracy or completeness of electronic copies of this plan sheet.

To get to the Caltrans web site, go to: http://www.dot.ca.gov

Caltrans Metric

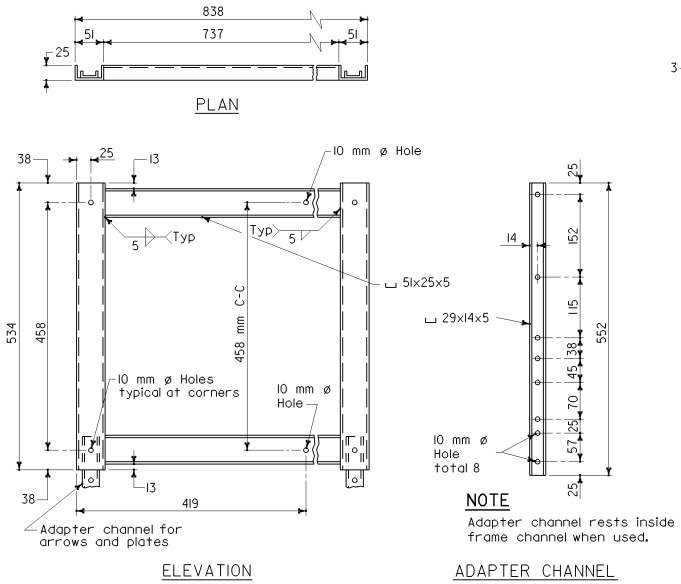

GALVANIZED STEEL FRAME

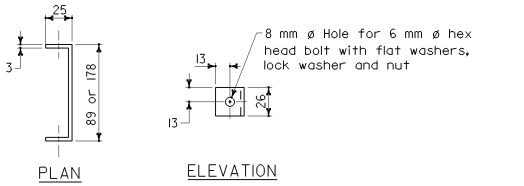

SPECIAL BRACKET

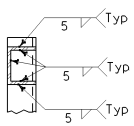

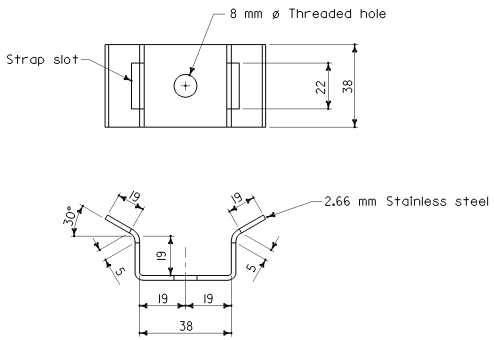

SADDLE BRACKET

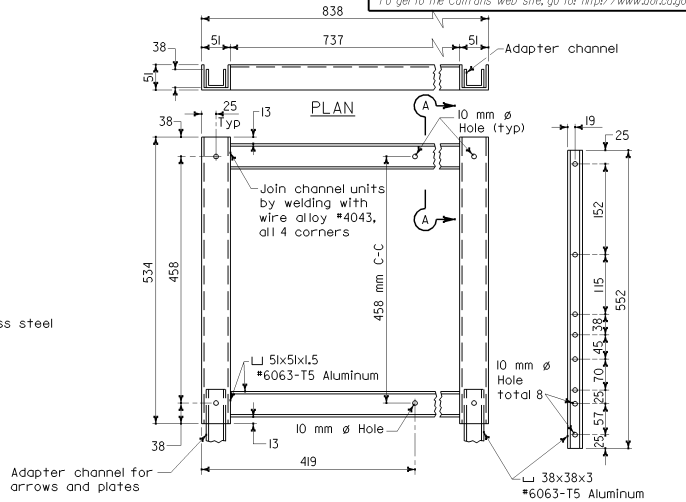

ALUMINUM FRAME

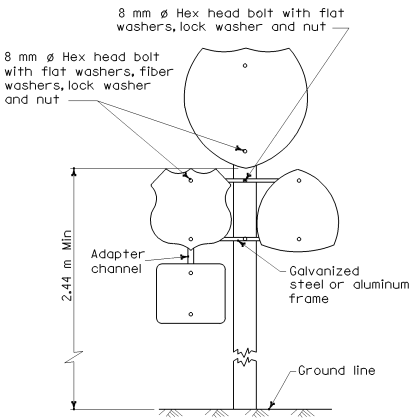

MULTIPLE SIGN INSTALLATION

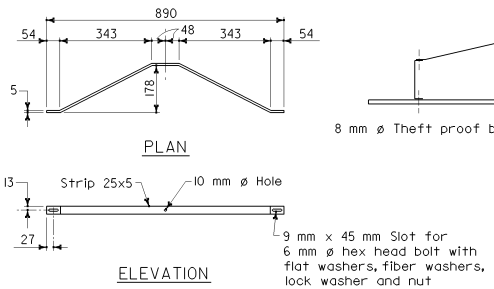

BACK BRACE DETAILS

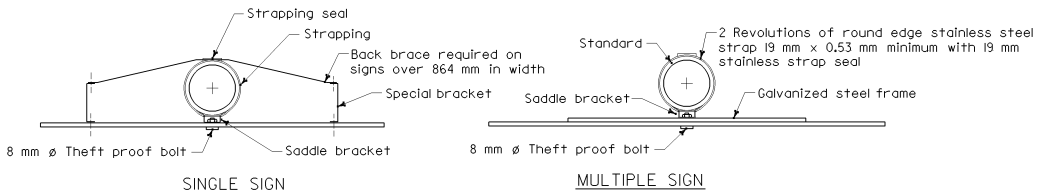

INSTALLATION ON ELECTROLIER, SIGNAL STANDARD OR SIGN STRUCTURE POST

STATE OF CALIFORNIA
DEPARTMENT OF TRANSPORTATION

ROADSIDE SIGNS TYPICAL INSTALLATION DETAILS No. 4

NO SCALE

ALL DIMENSIONS ARE IN MILLIMETERS UNLESS OTHERWISE SHOWN

RS4

2004 Std PLAN RS4

06-22-04