DIST	COUNTY	ROUTE	KILOMETER POST TOTAL PROJECT	SHEET NO.	TOTAL SHEETS

Caltrans Metric

REGISTERED CIVIL ENGINEER

July 1, 2004
PLANS APPROVAL DATE

REGISTERED PROFESSIONAL ENGINEER Greg W. Edwards No. C36386 Exp. 6-30-06 CIVIL STATE OF CALIFORNIA

The State of California or its officers or agents shall not be responsible for the accuracy or completeness of electronic copies of this plan sheet.

To get to the Caltrans web site, go to: http://www.dot.ca.gov

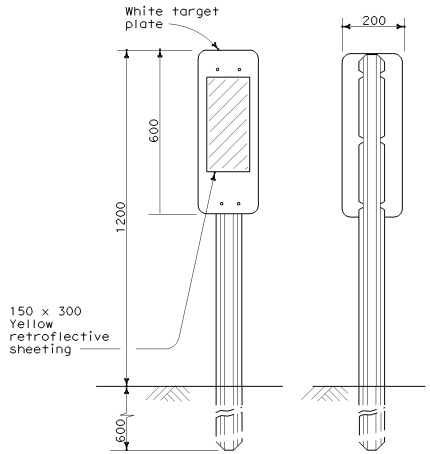

FRONT BACK

TYPE L-1
See Note 1

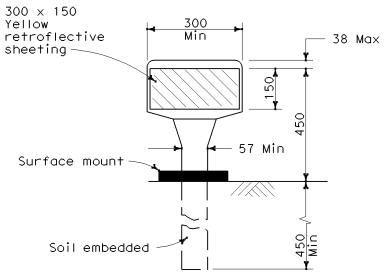

TYPE K-1
(Flexible post with horizonal orientation of sheeting)

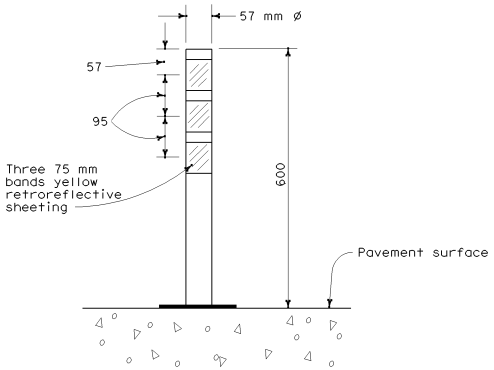

TYPE Q
(Tubular flexible post surface mount)

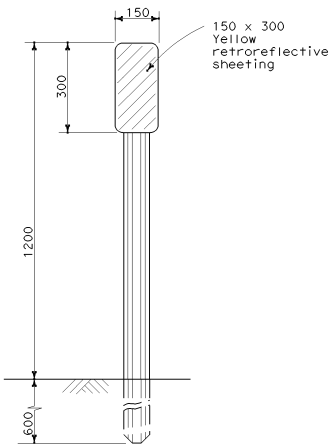

TYPE L-2
See Note 1

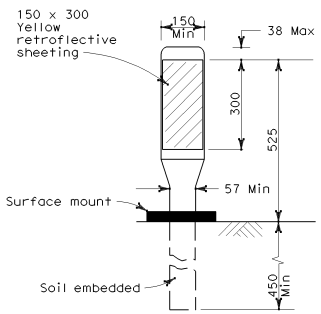

TYPE K-2
(Flexible post with vertical orientation of sheeting)

NOTE

1. See Standard Plan A73B for metal post details and additional markers.

STATE OF CALIFORNIA
DEPARTMENT OF TRANSPORTATION

OBJECT MARKERS

NO SCALE

ALL DIMENSIONS ARE IN MILLIMETERS UNLESS OTHERWISE SHOWN

A73A

2004 Std PLAN A73A

04-09-04