DIST	COUNTY	ROUTE	KILOMETER POST TOTAL PROJECT	SHEET NO.	TOTAL SHEETS

REGISTERED CIVIL ENGINEER

July 1, 2002
PLANS APPROVAL DATE

REGISTERED PROFESSIONAL ENGINEER Jeffrey B. Woody No. C41260 Exp. 3-31-03 CIVIL STATE OF CALIFORNIA

The State of California or its officers or agents shall not be responsible for the accuracy or completeness of electronic copies of this plan sheet.

Caltrans now has a web site! To get to the web site, go to: http://www.dot.ca.gov

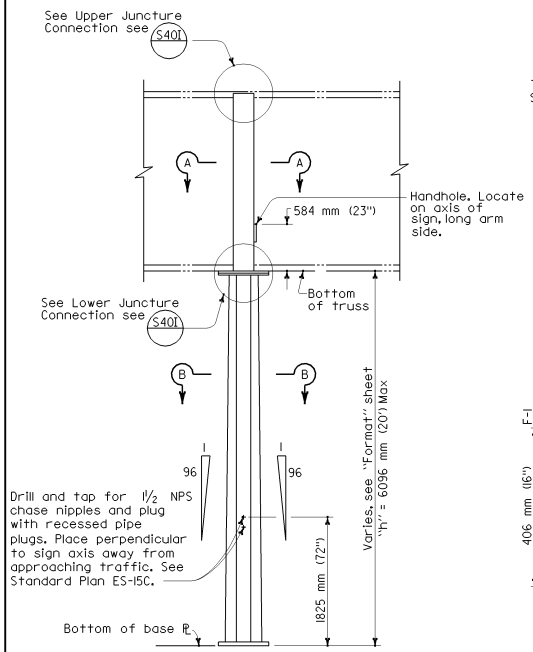

ELEVATION

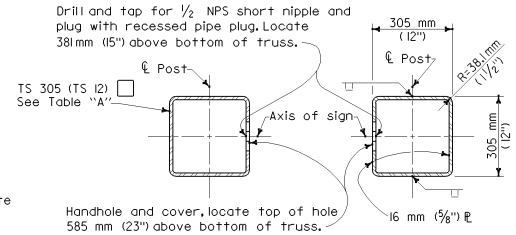

TYPE F-1 THRU F-3 TYPE F-4 AND F-5

SECTION A-A

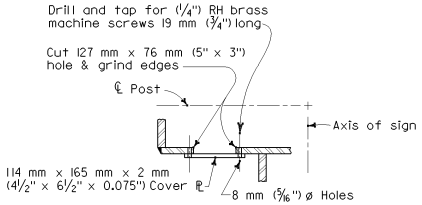

NOTE:

Face handhole away from traveled way. On F-1 type post locate handhole on centerline post in Plate "A".

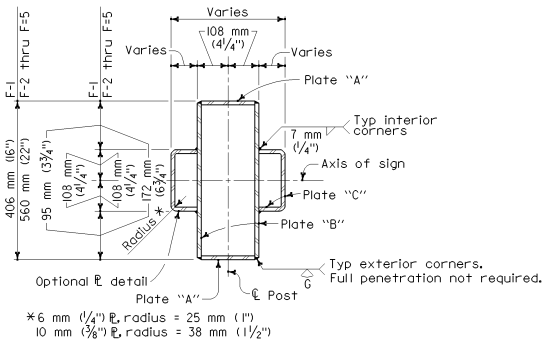

SECTION B-B

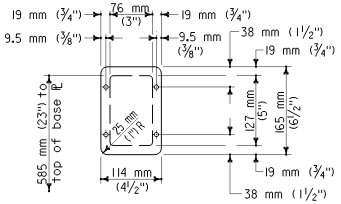

NOTE

For foundation details see S39

HANDHOLE AND COVER DETAIL

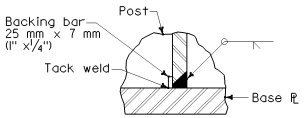

PLATES A, B AND C POST TO BASE PLATE WELDING DETAILS

TABLE "A"						
Post Type	Plate "A"	Plate "B"	Plate "C"	Base Plate	*Anchor Bolts No & Dia	Structural Tube
F-1	6.4 mm×204 mm (¼"×8")	6.4 mm (¼")	6.4 mm (¼")	51 mm×762 mm×915 mm (2"×30"×36")	8-51 mm (2") ø	305 mm×305 mm×7.9 mm (12"×12"×5/16")
F-2	12.7 mm×204 mm (½"×8")	6.4 mm (¼")	6.4 mm (¼")	51 mm×762 mm×915 mm (2"×30"×36")	12-45 mm (1¾") ø	305 mm×305 mm×9.5 mm (12"×12"×⅜")
F-3	38.1 mm×204 mm (1½"×8")	6.4 mm (¼")	6.4 mm (¼")	51 mm×762 mm×915 mm (2"×30"×36")	12-51 mm (2") ø	305 mm×305 mm×12.7 mm (12"×12"×½")
F-4	38.1 mm×197 mm (1½"×7¾")	9.5 mm (⅜")	9.5 mm (⅜")	64 mm×762 mm×915 mm (2½"×30"×36")	12-57 mm (2¼") ø	See Section A-A
F-5	38.1 mm×178 mm (1½"×7")	19.1 mm (¾")	19.1 mm (¾")	70 mm×762 mm×915 mm (2¾"×30"×36")	12-57 mm (2¼") ø	

* 51 mm (2") ø Anchor bolts may be substituted for 45 mm (1¾") ø bolts.

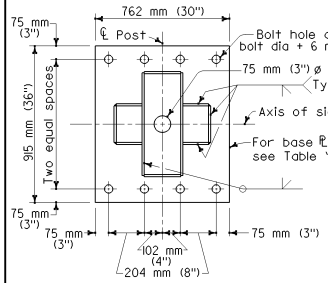

TYPE F-1

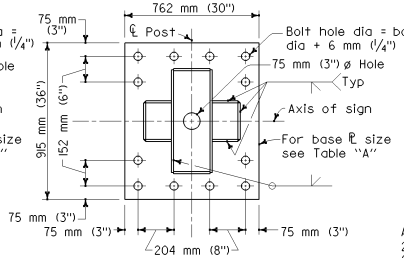

TYPE F-2 THRU F-5

BASE PLATE DETAILS

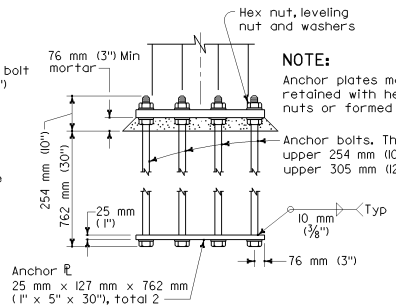

NOTE:

Anchor plates may be retained with hexagon nuts or formed heads.

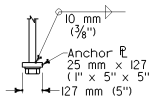

SINGLE SIDE BOLT

ANCHORAGE DETAILS

STATE OF CALIFORNIA
DEPARTMENT OF TRANSPORTATION

OVERHEAD SIGNS-BOX BEAM CLOSED TRUSS SINGLE POST BUTTERFLY POST DETAILS

These "Standard Plans for Construction of Local Streets and Roads" contain units in two systems of measurement: International System of Units (SI or "metric") and United States Standard Measures shown in the parentheses ( ). The measurements expressed in the two systems are not necessarily equal or interchangeable. See the "Foreword" at the beginning of this publication.

NO SCALE

S40M

2002 DUAL UNITS STD PLAN S40M

THIS STANDARD PLAN S40M INCLUDES CHANGES THAT WERE INCORPORATED IN REVISED STANDARD PLAN RSP S40M, DATED OCTOBER 26, 2000, AND ISSUED AS A PART OF ERRATUM NO. 99-1 FOR THE 1999 METRIC STANDARD PLANS.