DIST	COUNTY	ROUTE	KILOMETER POST TOTAL PROJECT	SHEET NO.	TOTAL SHEETS

REGISTERED CIVIL ENGINEER

July 1, 2002
PLANS APPROVAL DATE

REGISTERED PROFESSIONAL ENGINEER Jeffrey B. Woody No. C41260 EXP. 3-31-03 CIVIL STATE OF CALIFORNIA

The State of California or its officers or agents shall not be responsible for the accuracy or completeness of electronic copies of this plan sheet.

Caltrans now has a web site! To get to the web site, go to: http://www.dot.ca.gov

NOTE:
Left arm length may be shorter, longer or equal to right arm length.

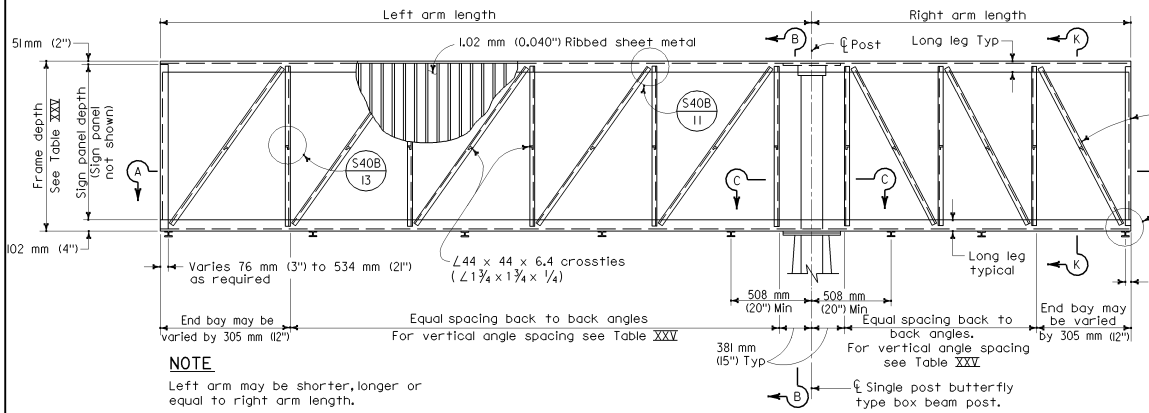

NOTE
Left arm may be shorter, longer or equal to right arm length.

ELEVATION

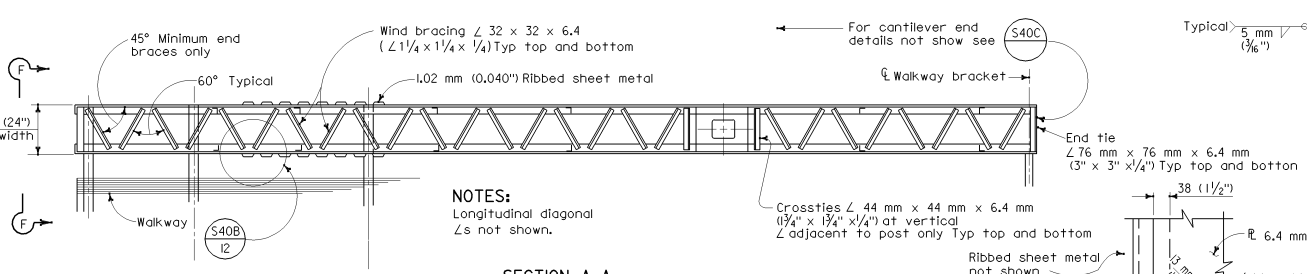

NOTES:
Longitudinal diagonal ∠s not shown.

SECTION A-A

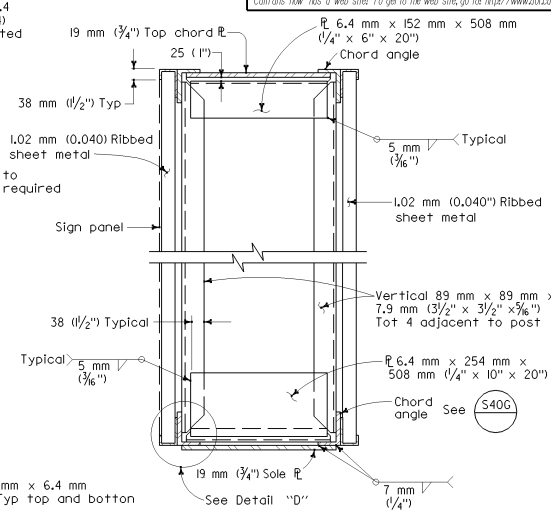

SECTION B-B

TABLE XXV

Sign Panel Depth	Frame Depth	Maximum Vertical Angle Spacing	Arm Length	
1778 mm (70")	1931 mm (76")	1677 mm (66")	1219 mm (48")	Spool required
2032 mm (80")	2185 mm (86")	1829 mm (72")	1524 mm (60")	
2286 mm (90")	2439 mm (96")	2134 mm (84")	1524 mm (60")	
2540 mm (100")	2693 mm (106")	2134 mm (84")	1829 mm (72")	
2794 mm (110")	2947 mm (116")	2286 mm (90")	1829 mm (72")	
3048 mm (120")	3201 mm (126")	2286 mm (90")	1829 mm (72")	

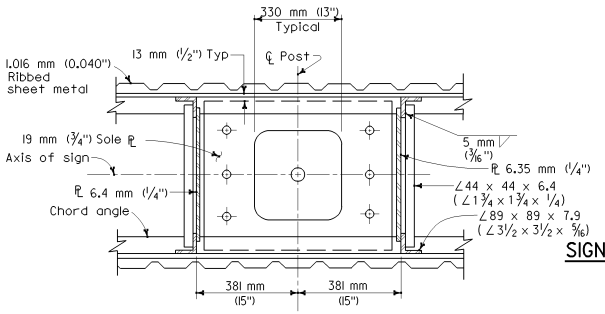

SECTION C-C

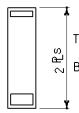

Top = 6.4 mm x 152 mm x 508 mm (¼" x 6" x 20")
Bottom = 6.4 mm x 254 mm x 508 mm (¼" x 10" x 20")

SIGN DEPTH 1778 (70")-2286 (90")

Top = 6.4 mm x 152 mm x 508 mm (¼" x 6" x 20")
Middle = 6.4 mm x 254 mm x 508 mm (¼" x 10" x 20")
Bottom = 6.4 mm x 254 mm x 508 mm (¼" x 10" x 20")

SIGN DEPTH 2540 (100")-3048 (120")

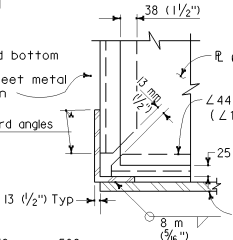

DETAIL D

NOTES:

1. For Detail (11) thru (14) and Section K-K, see (S40B)
2. For View F-F at cantilever end, see (S40D)

STATE OF CALIFORNIA
DEPARTMENT OF TRANSPORTATION

OVERHEAD SIGNS-BOX BEAM CLOSED TRUSS SINGLE POST BUTTERFLY FRAME DETAILS

These "Standard Plans for Construction of Local Streets and Roads" contain units in two systems of measurement: International System of Units (SI or "metric") and United States Standard Measures shown in the parentheses ( ). The measurements expressed in the two systems are not necessarily equal or interchangeable. See the "Foreword" at the beginning of this publication.

NO SCALE

S40K

2002 DUAL UNITS STD PLAN S40K