DIST	COUNTY	ROUTE	KILOMETER POST TOTAL PROJECT	SHEET NO.	TOTAL SHEETS

REGISTERED CIVIL ENGINEER

July 1, 2002
PLANS APPROVAL DATE

REGISTERED PROFESSIONAL ENGINEER
Jeffrey B. Woody
No. C41260
EXP. 3-31-03
CIVIL
STATE OF CALIFORNIA

The State of California or its officers or agents shall not be responsible for the accuracy or completeness of electronic copies of this plan sheet.

Caltrans now has a web site! To get to the web site, go to: http://www.dot.ca.gov

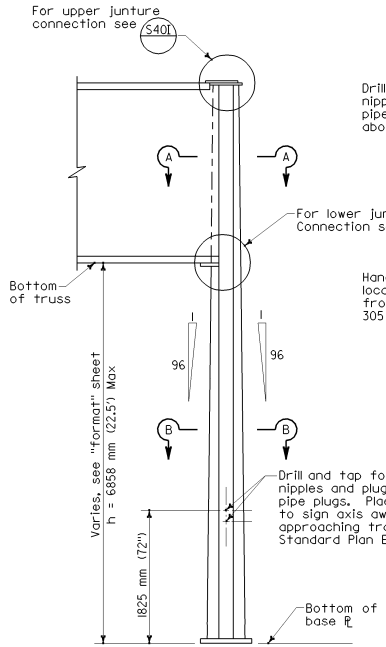

ELEVATION

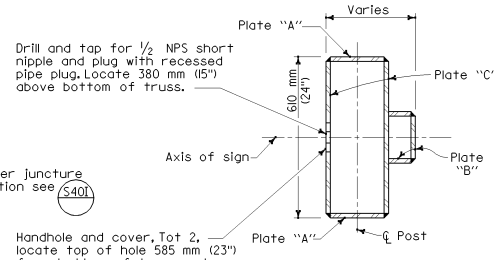

SECTION A-A

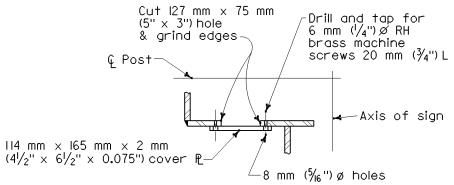

NOTE:
Face handhole and cover ℙ away from traveled way except as shown. See "Section A-A".

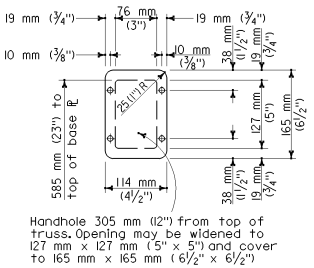

HANDHOLE AND COVER DETAIL

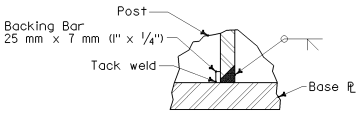

POST TO BASE PLATE WELDING DETAILS

NOTE:
1. For foundation details see S39

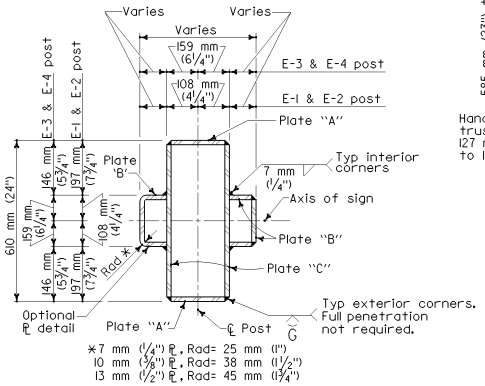

SECTION B-B

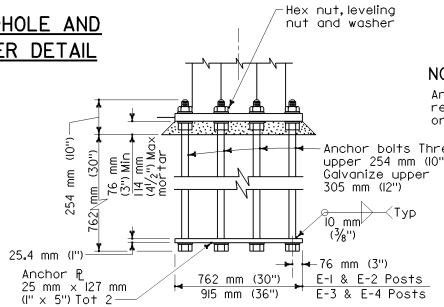

NOTE:
Anchor ℙs may be retained with hex nuts or formed heads.

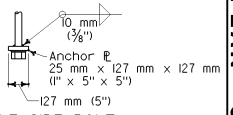

SINGLE SIDE BOLT

ANCHORAGE DETAILS

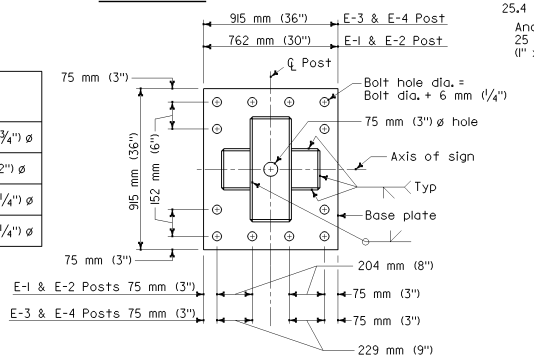

BASE PLATE

Post Type	Base Plate	Plate "A"	Plate "B"	Plate "C"	* Anchor Bolts
E-1	51 mm x 762 mm x 915 mm (2" x 30" x 36")	12.7 mm (1/2")	6.4 mm (1/4")	9.5 mm (3/8")	12-45 mm (1 3/4") ø
E-2	64 mm x 762 mm x 915 mm (2 1/2" x 30" x 36")	25.4 mm (1")	9.5 mm (3/8")	12.7 mm (1/2")	12-51 mm (2") ø
E-3	64 mm x 915 mm x 915 mm (2 1/2" x 36" x 36")	25.4 mm (1")	9.5 mm (3/8")	12.7 mm (1/2")	12-57 mm (2 1/4") ø
E-4	64 mm x 915 mm x 915 mm (2 1/2" x 36" x 36")	25.4 mm (1")	12.7 mm (1/2")	15.9 mm (5/8")	12-57 mm (2 1/4") ø

* 51 mm (2") ø Anchor bolts may be substituted for 45 mm (1 3/4") ø bolts.

STATE OF CALIFORNIA
DEPARTMENT OF TRANSPORTATION

OVERHEAD SIGNS-BOX BEAM CLOSED TRUSS SINGLE POST CANTILEVER POST DETAILS

These "Standard Plans for Construction of Local Streets and Roads" contain units in two systems of measurement: International System of Units (SI or "metric") and United States Standard Measures shown in the parentheses ( ). The measurements expressed in the two systems are not necessarily equal or interchangeable. See the "Foreword" at the beginning of this publication.

NO SCALE

S40J

2002 DUAL UNITS STD PLAN S40J

THIS STANDARD PLAN S40J INCLUDES CHANGES THAT WERE INCORPORATED IN REVISED STANDARD PLAN RSP S40J, DATED OCTOBER 26, 2000, AND ISSUED AS A PART OF ERRATUM NO. 99-1 FOR THE 1999 METRIC STANDARD PLANS.