DIST	COUNTY	ROUTE	KILOMETER POST TOTAL PROJECT	SHEET NO.	TOTAL SHEETS

REGISTERED CIVIL ENGINEER

July 1, 2002
PLANS APPROVAL DATE

REGISTERED PROFESSIONAL ENGINEER Jeffrey B. Woody No. C41260 Exp. 3-31-03 CIVIL STATE OF CALIFORNIA

The State of California or its officers or agents shall not be responsible for the accuracy or completeness of electronic copies of this plan sheet.

Caltrans now has a web site! To get to the web site, go to: http://www.dot.ca.gov

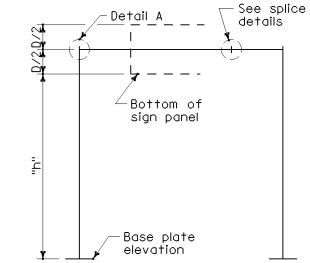

SINGLE CROSS BEAM SERIES TYPE A-1

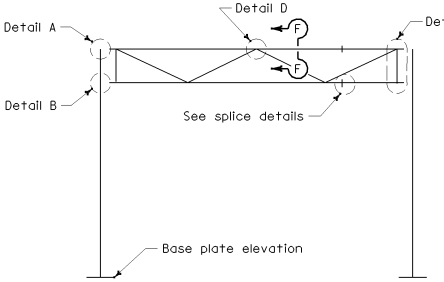

TRUSS CROSS BEAM SERIES TYPE A-2

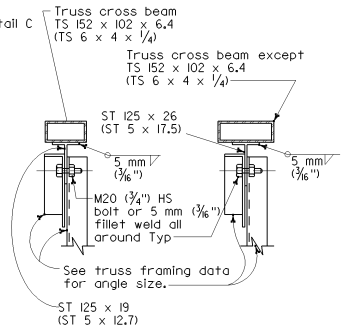

SECTION F-F

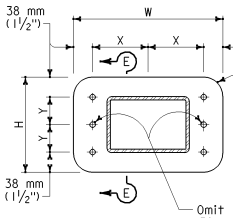

END VIEW

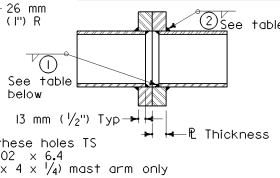

SECTION E-E

SPLICE DETAILS

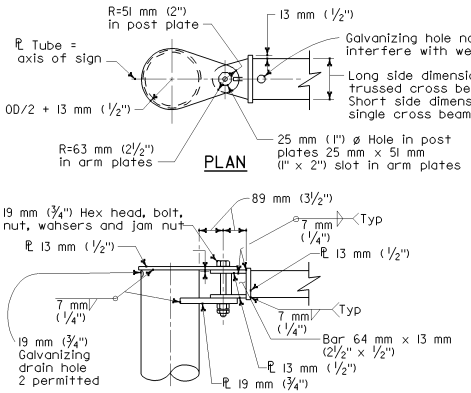

DETAIL A

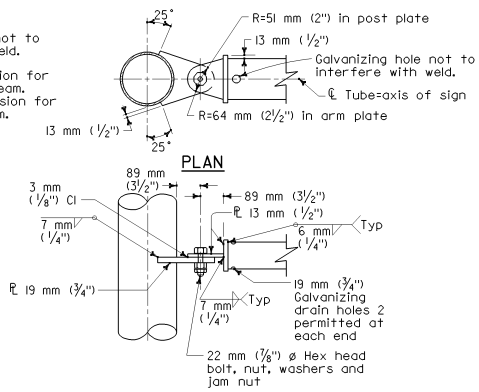

DETAIL B

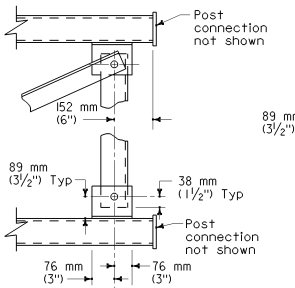

DETAIL C

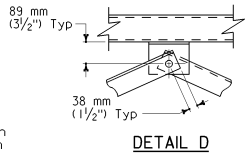

DETAIL D

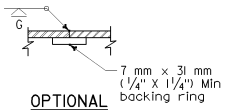

OPTIONAL WELDED SPLICE

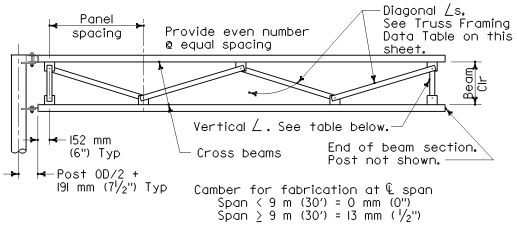

Camber for fabrication at ℄ span
Span < 9 m (30') = 0 mm (0")
Span ≥ 9 m (30') = 13 mm (1/2")

TRUSS FRAMING DATA				
Sign Depth	Beam Clearance	Maximum Panel Spacing	Vertical Angle	Diagonal Angle
1016 mm-1778 mm (40"-70")	610 mm (24")	1676 mm (66")	∠89 mm x 64 mm x 6.4 mm * (3 1/2" x 2 1/2" x 1/4")	∠89 mm x 64 mm x 6.4 mm * (3 1/2" x 2 1/2" x 1/4")
2032 mm-2540 mm (80"-100")	1372 mm (54")	1981 mm (78")		

* Short leg outstanding.

NOTES

For post connection to base ℄, see S20A/A

For cross beam to sign panel connections, see S18A

See Format sheet for:

1. Sign type and location.
2. Panel type and location on structure.
3. Post size and dimension "h".
4. Cross beam size.
5. Foundation type.
6. Illumination if required.

SPLICE DATA									
Tubular Cross Beam Size	High Strength Bolts				A-36 Plates			Welding	
	No.	Size	X	Y	W	H	Thick-ness	1	2
TS 152 mm 102 mm 6.4 mm (6" x 4" x 1/4")	4	M20 (3/4")	108 mm (4 1/4")	51 mm	292 mm (11 1/2")	178 mm (7")	25.4 mm (1")	5 mm (3/16")	8 mm (5/16")
TS 203 mm x 102 mm x 6.4 mm (8" x 4" x 1/4")	6		133 mm (5 1/4")	(2")	343 mm (13 1/2")	(7")			
TS 203 mm 152 mm x 6.4 mm (8" x 6" x 1/4")	6			64 mm (2 1/2")		203 mm (8")	29 mm		10 mm (3/8")
TS 203 mm x 152 mm x 9.5 mm (8" x 6" x 3/8")	6		108 mm (4 1/4")	89 mm (3 1/2")	292 mm (11 1/2")	254 mm (10")	(1 1/8")	7 mm (1/4")	8 mm (5/16")
TS 254 mm x 152 mm x 6.4 mm (10" x 6" x 1/4")	6		165 mm (6 1/2")	64 mm (2 1/2")	406 mm (16")	203 mm (8")	35 mm (1 3/8")	5 mm (3/16")	10 mm (3/8")
TS 254 mm x 152 mm x 9.5 mm (10" x 6" x 3/8")	6			76 mm (3")		229 mm (9")	41 mm (1 5/8")	8 mm (5/16")	13 mm (1/2")

STATE OF CALIFORNIA
DEPARTMENT OF TRANSPORTATION

OVERHEAD SIGNS-LIGHTWEIGHT TYPE A CONNECTION DETAILS

These "Standard Plans for Construction of Local Streets and Roads" contain units in two systems of measurement: International System of Units (SI or "metric") and United States Standard Measures shown in the parentheses ( ). The measurements expressed in the two systems are not necessarily equal or interchangeable. See the "Foreword" at the beginning of this publication.

NO SCALE

S15