DIST	COUNTY	ROUTE	KILOMETER POST TOTAL PROJECT	SHEET NO.	TOTAL SHEETS

REGISTERED CIVIL ENGINEER

July 1, 2002
PLANS APPROVAL DATE

REGISTERED PROFESSIONAL ENGINEER Jeffrey B. Woody No. C41260 Exp. 3-31-03 CIVIL STATE OF CALIFORNIA

The State of California or its officers or agents shall not be responsible for the accuracy or completeness of electronic copies of this plan sheet.

Caltrans now has a web site! To get to the web site, go to: http://www.dot.ca.gov

TABLE XIV

Post Type	Pipe Size NPS	Pipe Size Wall Thickness	Split	Base Plate Size (See Note 3)	Anchor Bolts	Pedestal Size (See Note 3)	Footing Size (See Note 3)	Longitudinal Footing Reinforcement Top Bars	Longitudinal Footing Reinforcement Bottom Bars	⌋ Bars
I-S	14	12.70 mm (1/2")	127 mm (5")	890 mm x 788 mm x 51 mm (35" x 31" x 2")	8-57 mm (2 1/4") ø	1075 mm x 975 mm (42" x 38")	2.5 m x 4.3 m (8' x 14')	8-#16 (#5)	8-#29 (#9)	#29 (#9)
II-S	16	12.70 mm (1/2")	152 mm (6")	890 mm x 788 mm x 51 mm (35" x 31" x 2")	8-57 mm (2 1/4") ø	1075 mm x 975 mm (42" x 38")	2.5 m x 4.3 m (8' x 14')	8-#16 (#5)	8-#29 (#9)	#29 (#9)
III-S	18	12.70 mm (1/2")	178 mm (7")	940 mm x 840 mm x 51 mm (37" x 33" x 2")	8-57 mm (2 1/4") ø	1125 mm x 1025 mm (43" x 40")	2.5 m x 4.9 m (8' x 16')	8-#16 (#5)	8-#29 (#9)	#29 (#9)
IV-S	20	12.70 mm (1/2")	204 mm (8")	1042 mm x 840 mm x 51 mm (41" x 33" x 2")	8-57 mm (2 1/4") ø	1225 mm x 1025 mm (48" x 40")	2.8 m x 5.2 m (9' x 17')	9-#16 (#5)	9-#32 (#10)	#32 (#10)
V-S	24	12.70 mm (1/2")	204 mm (8")	1143 mm x 991 mm x 51 mm (45" x 39" x 2")	8-57 mm (2 1/4") ø	1350 mm x 1200 mm (53" x 47")	3.1 m x 5.5 m (10' x 18')	10-#19 (#6)	10-#36 (#12)	#36 (#12)
VI-S or VII-S	24	24.60 mm (3/8")	204 mm (8")	1143 mm x 991 mm x 51 mm (45" x 39" x 2")	8-64 mm (2 1/2") ø	1350 mm x 1200 mm (53" x 47")	3.7 m x 6.1 m (12' x 20')	13-#36 (#12)	13-#36 (#12)	#36 (#12)

NOTES

1. For "General Notes" see Standard Plan S1.
2. Longer sides of base plates, pedestals and footings; shall be normal to axis of sign.
3. Backfill shall be in place prior to erection of post.
4. Thread upper 200 (8") of anchor bolts and galvanize upper 300 mm (12").
5. Spread footing shown, use pile foundation when shown on the Project Plans.
6. Anchor plates may be retained with hex nut or formed head as an alternative to details shown.
7. When foundation is located on a steep slope with exposed face of concrete adjacent to traffic, see "Detail C" on Standard Plan S13.
8. Slope protection required when indicated on Project Plans.

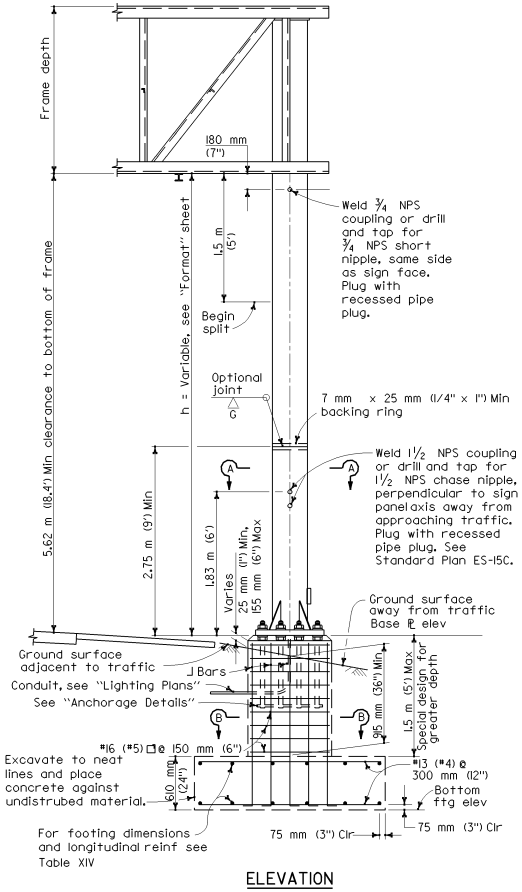

ELEVATION

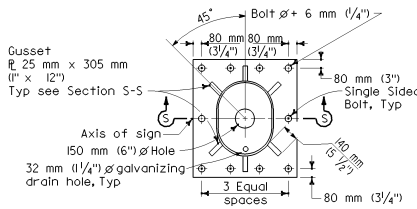

8 BOLT TYPE

TYPICAL BASE PLATE

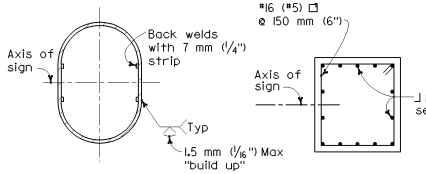

SECTION A-A

SECTION B-B

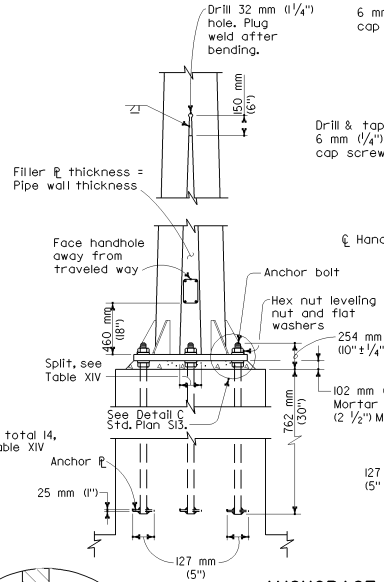

ANCHORAGE DETAILS

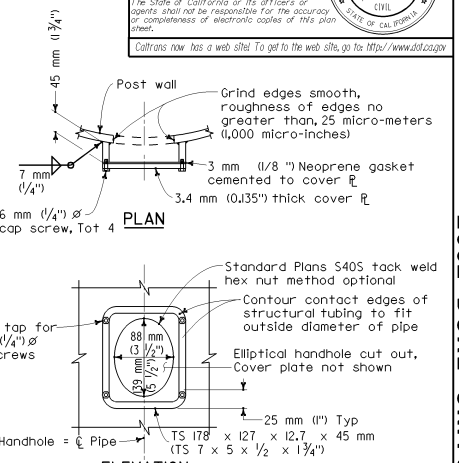

PLAN

ELEVATION

TYPICAL DETAILS OF HANDHOLE AND COVER

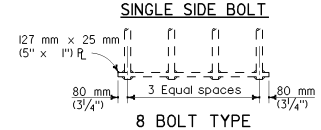

SINGLE SIDE BOLT

8 BOLT TYPE

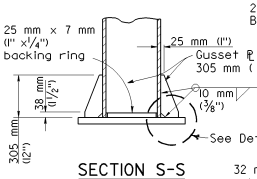

SECTION S-S

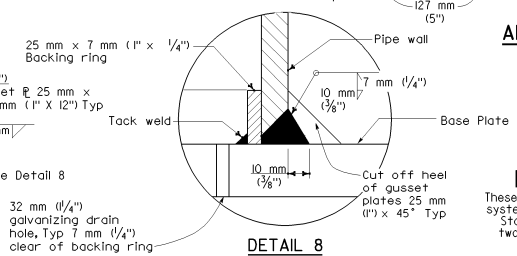

DETAIL 8

STATE OF CALIFORNIA
DEPARTMENT OF TRANSPORTATION

OVERHEAD SIGNS-TRUSS TWO POST TYPE POST TYPES I-S THROUGH VII-S

These "Standard Plans for Construction of Local Streets and Roads" contain units in two systems of measurement: International System of Units (SI or "metric") and United States Standard Measures shown in the parentheses ( ). The measurements expressed in the two systems are not necessarily equal or interchangeable. See the "Foreword" at the beginning of this publication.

NO SCALE

S3

2002 DUAL UNITS STD PLAN S3

THIS STANDARD PLAN S3 INCLUDES CHANGES THAT WERE INCORPORATED IN REVISED STANDARD PLAN RSP S3, DATED OCTOBER 26, 2000, AND ISSUED AS A PART OF ERRATUM NO. 99-1 FOR THE 1999 METRIC STANDARD PLANS.