DIST	COUNTY	ROUTE	KILOMETER POST TOTAL PROJECT	SHEET NO.	TOTAL SHEETS

REGISTERED CIVIL ENGINEER

July 1, 2002
PLANS APPROVAL DATE

REGISTERED PROFESSIONAL ENGINEER Jeffrey B. Woody No. C41260 Exp. 3-31-03 CIVIL STATE OF CALIFORNIA

The State of California or its officers or agents shall not be responsible for the accuracy or completeness of electronic copies of this plan sheet.

Caltrans now has a web site! To get to the web site, go to: http://www.dot.ca.gov

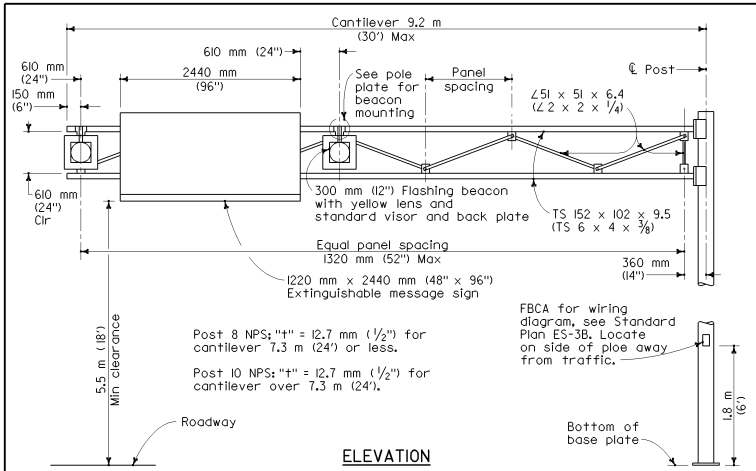

Post 8 NPS: "t" = 12.7 mm (1/2") for cantilever 7.3 m (24') or less.

Post 10 NPS: "t" = 12.7 mm (1/2") for cantilever over 7.3 m (24').

ELEVATION

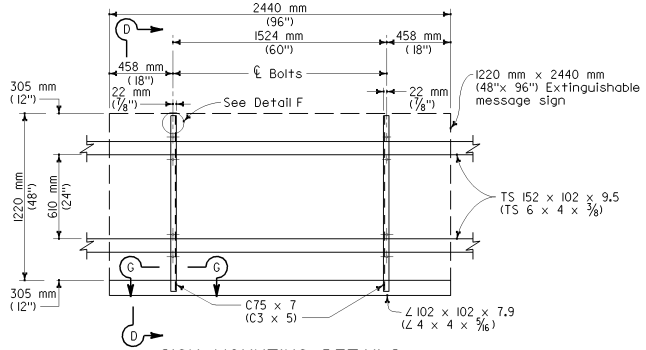

SIGN MOUNTING DETAILS

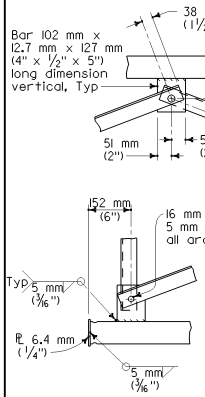

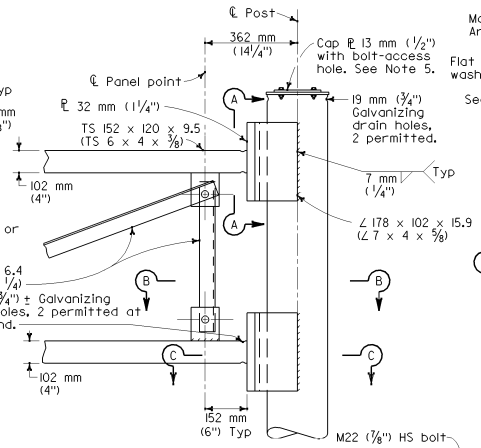

TRUSS FRAME CONNECTION DETAILS

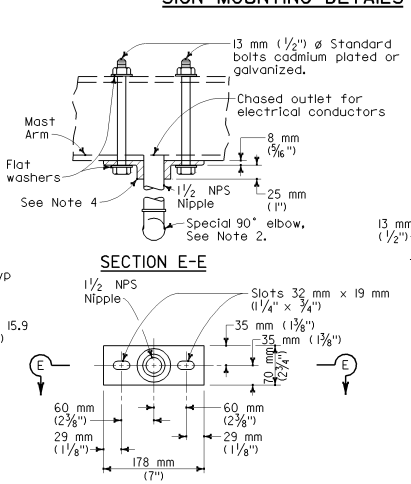

SECTION E-E

ELEVATION

POLE PLATE FOR BEACON MOUNTING

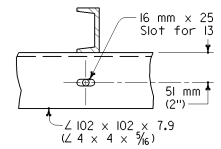

SECTION G-G

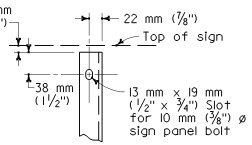

DETAIL F

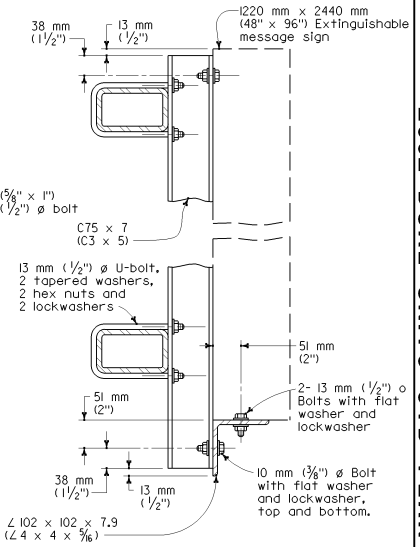

SECTION D-D

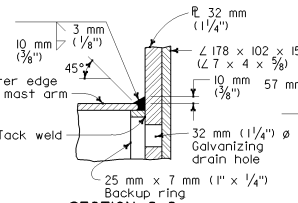

SECTION C-C

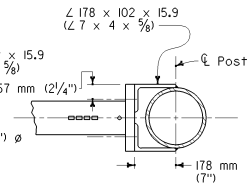

SECTION B-B

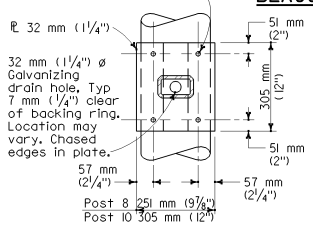

SECTION A-A

NOTES

1. For general notes, base plates, anchor bolts and foundations refer to Lightweight Signs, Post Details and Foundation Details sheets of the Standard Plans.
2. For details of special 90° elbow, see Standard Plan ES-4D.
3. For sign structure dimensions, see Project Plans.
4. Pole plate shall be bronze, aluminum or ductile iron as specified in the Standard Specifications.
5. For Bolt-Access Hole Details, see Overhead Signs-Truss Frame Juncture Details.

STATE OF CALIFORNIA
DEPARTMENT OF TRANSPORTATION

SIGNAL, LIGHTING AND ELECTRICAL SYSTEMS EXTINGUISHABLE MESSAGE SIGN AND FLASHING BEACONS

These "Standard Plans for Construction of Local Streets and Roads" contain units in two systems of measurement: International System of Units (SI or "metric") and United States Standard Measures shown in the parentheses ( ). The measurements expressed in the two systems are not necessarily equal or interchangeable. See the "Foreword" at the beginning of this publication.

NO SCALE

ES-14C

2002 DUAL UNITS STD PLAN ES-14C