DIST	COUNTY	ROUTE	KILOMETER POST TOTAL PROJECT	SHEET NO.	TOTAL SHEETS

REGISTERED CIVIL ENGINEER

July 1, 2002
PLANS APPROVAL DATE

REGISTERED PROFESSIONAL ENGINEER Jeffrey B. Woody No. C41260 Exp. 3-31-03 CIVIL STATE OF CALIFORNIA

The State of California or its officers or agents shall not be responsible for the accuracy or completeness of electronic copies of this plan sheet.

Caltrans now has a web site! To get to the web site, go to: http://www.dot.ca.gov

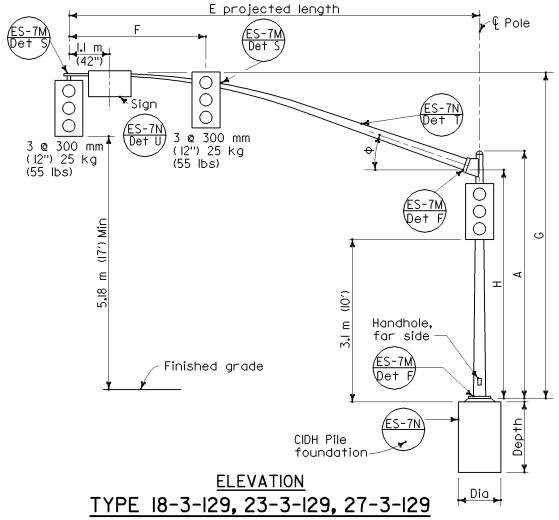

ELEVATION

TYPE 18-3-129, 23-3-129, 27-3-129

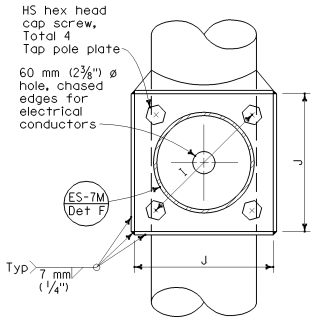

SECTION A-A

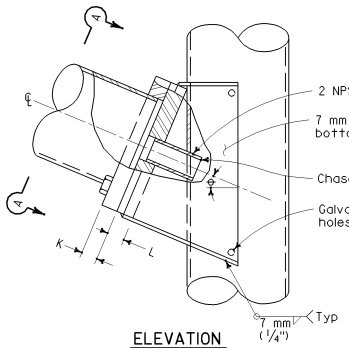

ELEVATION

SIGNAL ARM CONNECTION DETAILS

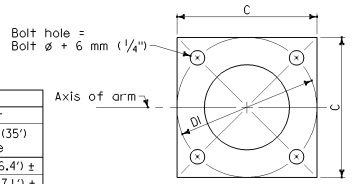

BASE PLATE

HIGH STRENGTH CAP SCREWS

16 mm (5/8") - 11NC - 45 mm (1 3/4")

- Length, mm (inches)
- Threads per inch
- Size, mm (inches)

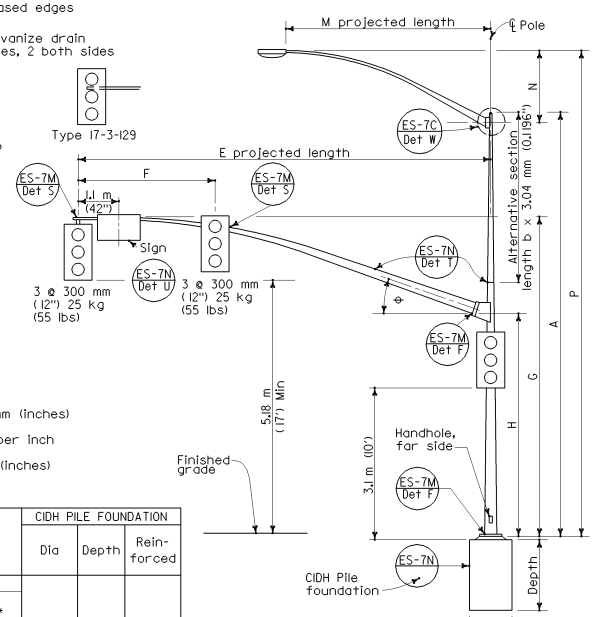

ELEVATION

TYPE 17-3-129, 24A-3-129, 19-3-129, 26-3-129, 19A-3-129, 26A-3-129, 24-3-129

LUMINAIRE ARM DATA					
M Projected Length	N Rise	Min OD at Pole	Thickness	P Mounting Height: 9.1 m (30') Pole	P Mounting Height: 10.7 m (35') Pole
1.8 m (6')	610 mm (24") ±	83 mm (3 1/4")	3.04 mm (0.1196")	9.6 m (31.5') ±	11.1 m (36.4') ±
2.4 m (8')	760 mm (30") ±	89 mm (3 1/2")		9.8 m (32.2') ±	11.3 m (37.1') ±
3.1 m (10')	990 mm (39") ±	98 mm (3 7/8")		10.0 m (32.8') ±	11.5 m (37.7') ±
3.7 m (12')	1290 mm (51") ±			10.3 m (33.8') +	11.9 m (38.7') +
4.6 m (15')	1450 mm (57") ±	108 mm (4 1/4")		10.5 m (34.4') ±	12.0 m (39.4') ±

Pole Type	Load Case	Wind Velocity	POLE DATA: A Height	Min OD: Base	Min OD: Top	Thickness	Alternative Section: B Length	Alternative Section: Bottom	Alternative Section: Top	BASE PLATE DATA: C	DI Bolt Circle	Thickness	Anchor Bolts: Size	Luminaire Arm (See Luminaire Arm Data)	Signal Arm (See Signal Arm Data)	CIDH PILE FOUNDATION: Dia	Depth	Reinforced
17-3-129	3	129 km/h (80 mph)	9.1 m (30')	273 mm (10 3/4")	168 mm (6 5/8")	4.55 mm (0.179")	3.1 m (10')	203 mm (8")	203 mm (8")	457 mm (18")	445 mm (17 1/2")	38 mm (1 1/2")	51 mm ø x 1067 mm x 152 mm (2" ø x 42" x 6")	3.7 m (12') •	6.1 m (20')	914 mm (36")	2.7 m (7')	Yes
18-3-129			5.2 m (17')		214 mm (8 7/16")	6.07 mm (0.2391")	None							None	9.1 m (30')*			
19-3-129			9.1 m (30')		168 mm (6 5/8")		3.1 m (10')	203 mm (8")	203 mm (8")					3.7 m (12') •				
19A-3-129			10.7 m (35')		151 mm (5 15/16")		4.6 m (15')		151 mm (5 15/16")					4.6 m (15') •				
23-3-129			5.2 m (17')	305 mm (12")	229 mm (9")		None							None	10.7 m (35')			
24-3-129			9.1 m (30')		203 mm (8")		3.1 m (10')	238 mm (9 3/8")	184 mm (7 1/4")					3.7 m (12') •				
24A-3-129			10.7 m (35')		186 mm (7 5/16")		4.6 m (15')		168 mm (6 5/8")					4.6 m (15') •				
26-3-129			9.1 m (30')	308 mm (12 1/8")	203 mm (8")	7.94 mm (0.3125")	3.1 m (10')		203 mm (8")					3.7 m (12') •	13.7 m (40')*			
26A-3-129			10.7 m (35')		186 mm (7 5/16")		4.6 m (15')		186 mm (7 5/16")					4.6 m (15') •				
27-3-129			5.2 m (17')		248 mm (9 3/4")		None							None				

*Indicates arm length to be used unless otherwise noted on plans.

SIGNAL ARM DATA										
E Projected Height	F Min Spacing	G Mounting Height	H	Min OD at Pole	Thickness	I Bolt Circle	HS Cap Screws	J Plate Size	K Arm ℙ Thickness	L Pole ℙ Thickness	⊖
4.6 m (15')	2.5 m (8')	6.8 m (22.3') ±	4.9 m (16')	168 mm (6 5/8")	4.55 mm (0.1793")	305 mm (12")	32 mm-7NC-76 mm (1 1/4"-7NC-3")	305 mm (12")	32 mm (1 1/4")	38 mm (1 1/2")	23°
6.1 m (20')		6.6 m (21.7') ±									
7.6 m (25')	3.7 m (12')	6.9 m (22.6') ±		186 mm (7 5/16")	6.07 mm (0.2391")						
9.1 m (30')				203 mm (8")							
10.7 m (35')	4.3 m (14')	7.0 m (23.0') ±		222 mm (8 3/4")		330 mm (13")		305 mm (12")	38 mm (1 1/2")	45 mm (1 3/4")	21°
12.2 m (40')	4.6 m (15')			238 mm (9 3/8")							15°
13.7 m (45')		7.2 m (23.6') ±		256 mm (10 1/16")							

STATE OF CALIFORNIA
DEPARTMENT OF TRANSPORTATION

SIGNAL AND LIGHTING STANDARDS
CASE 3 ARM LOADING
WIND VELOCITY=129 km/h (80 mph)
ARM LENGTHS 4.6 m-13.7 m (15'-45')

These "Standard Plans for Construction of Local Streets and Roads" contain units in two systems of measurement: International System of Units (SI or "metric") and United States Standard Measures shown in the parentheses (). The measurements expressed in the two systems are not necessarily equal or interchangeable. See the "Foreword" at the beginning of this publication.

NO SCALE

ES-7E

2002 DUAL UNITS STD PLAN ES-7E

THIS STANDARD PLAN ES-7E INCLUDES CHANGES THAT WERE INCORPORATED IN REVISED STANDARD PLAN RSP ES-7E, DATED OCTOBER 26, 2000, AND ISSUED AS A PART OF ERRATUM NO. 99-1 FOR THE 1999 METRIC STANDARD PLANS.