SIGNAL ARM DATA										
E Projected Height	G Mounting Height	H	Min OD at Pole	Thickness	I Bolt Circle	HS Cap Screws	J Plate Size	K Arm ℄ Thickness	L Pole ℄ Thickness	Φ
4.6 m (15′)	6.8 m (22.3′) ±	4.9 m (16′)	178 mm (7″)	3.04 mm (0.1196″)	305 mm (12″)	32 mm-7NC-76 mm (1¼″-7NC-3″)	305 mm (12″)	32 mm (1¼″)	38 mm (1½″)	23°
6.1 m (20′)	6.6 m (21.7′) ±		181 mm (7 1/8″)							
7.6 m (25′)	6.9 m (22.6′) ±		186 mm (7 5/16″)							
9.1 m (30′)	7.0 m (23.0′) ±		203 mm (8″)							

LUMINAIRE ARM DATA					
M Projected Length	N Rise	Min OD at Pole	Thickness	P Mounting Height 9.1 m (30′) Pole	P Mounting Height 10.7 m (35′) Pole
1.8 m (6′)	610 mm (24″) ±	83 mm (3¼″)	3.04 mm (0.120″)	9.6 m (31.5′) ±	11.1 m (36.4′) ±
2.4 m (8′)	760 mm (30″) ±	89 mm (3½″)		9.8 m (32.2′) ±	11.3 m (37.1′) ±
3.1 m (10′)	990 mm (39″) ±	98 mm (3⅞″)		10.0 m (32.8′) ±	11.5 m (37.7′) ±
3.7 m (12′)	1290 mm (51″) ±			10.3 m (33.8′) ±	11.8 m (38.7′) ±
4.6 m (15′)	1450 mm (57″) ±	108 mm (4¼″)		10.5 m (34.4′) ±	12.0 m (39.4′) ±

DIST	COUNTY	ROUTE	KILOMETER POST TOTAL PROJECT	SHEET NO.	TOTAL SHEETS

REGISTERED CIVIL ENGINEER

July 1, 2002
PLANS APPROVAL DATE

REGISTERED PROFESSIONAL ENGINEER Jeffrey B. Woody No. C41260 Exp. 3-31-03 CIVIL STATE OF CALIFORNIA

The State of California or its officers or agents shall not be responsible for the accuracy or completeness of electronic copies of this plan sheet.

Caltrans now has a web site! To get to the web site, go to: http://www.dot.ca.gov

Pole Type	Load Case	Wind Velocity	A Height	POLE DATA Min OD Base	POLE DATA Min OD Top	POLE DATA Thickness	Alternative Section B Length	Alternative Section Bottom	Alternative Section Top	BASE PLATE DATA C	BASE PLATE DATA DI Bolt Circle	BASE PLATE DATA Thickness	BASE PLATE DATA Anchor Bolts Size	Luminaire Arm (See Luminaire Arm Data)	Signal Arm (See Signal Arm Data)	CIDH PILE FOUNDATION Diameter	CIDH PILE FOUNDATION Depth	CIDH PILE FOUNDATION Reinforced
18-I-129	I	129 km/h (80 mph)	5.2 m (17′)	273 mm (10¾″)	214 mm (8 7/16″)	4.55 mm (0.1793″)	None	None	None	457 mm (18″)	445 mm (17½″)	32 mm (1¼″)	38 mm ø × 1067 mm × 152 mm (1½″ ø × 42″ × 6″)	None	7.6 m or 9.1 m (25′ or 30′)	760 mm (30″)	2.2 m (7′)	Yes
19-I-129			9.1 m (30′)		168 mm (6⅝″)		3.0 m (10′)	203 mm (8″)	168 mm (6⅝″)					3.7 m (12′) *				
19A-I-129			10.7 m (35′)		151 mm (5 15/16″)		4.6 m (15′)		151 mm (5 15/16″)					4.6 m (15′) *				

* Indicates arm length to be used unless otherwise noted on plans.

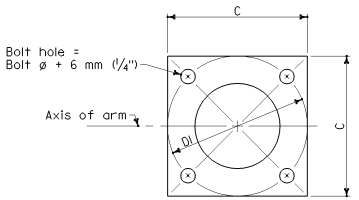

BASE PLATE

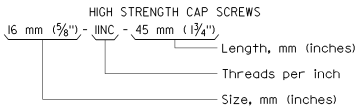

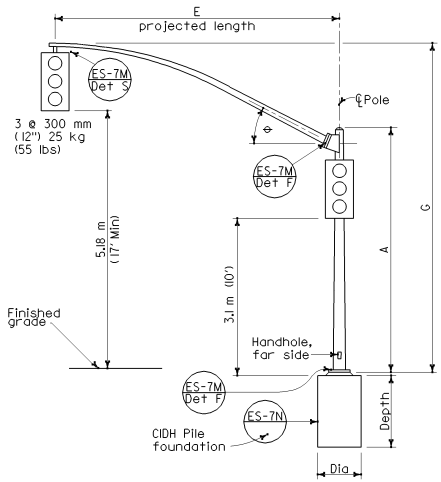

ELEVATION

TYPE 18-I-129

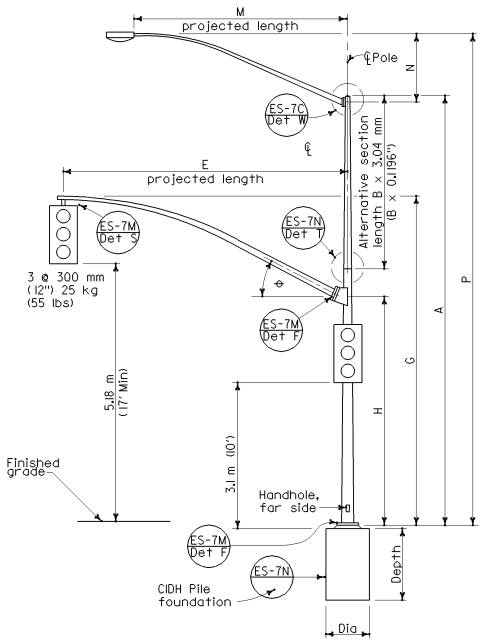

ELEVATION

TYPE 19-I-129, 19A-I-129

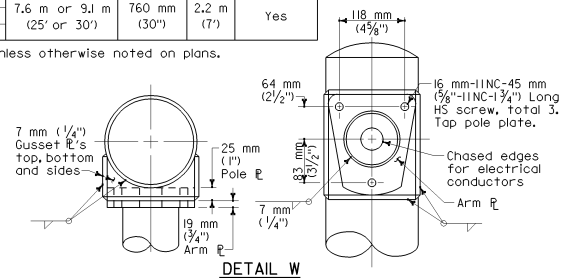

DETAIL W

LUMINAIRE ARM CONNECTION

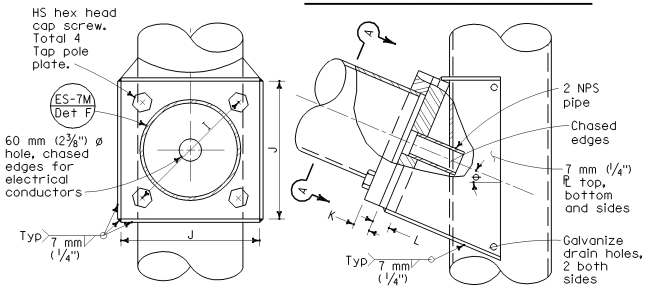

SECTION A-A

ELEVATION

SIGNAL ARM CONNECTION DETAILS

STATE OF CALIFORNIA
DEPARTMENT OF TRANSPORTATION

SIGNAL AND LIGHTING STANDARDS
CASE 1 ARM LOADING
WIND VELOCITY=129 km/h (80 mph)
ARM LENGTHS 4.6 m-9.1 m (15'-30')

These "Standard Plans for Construction of Local Streets and Roads" contain units in two systems of measurement: International System of Units (SI or "metric") and United States Standard Measures shown in the parentheses (). The measurements expressed in the two systems are not necessarily equal or interchangeable. See the "Foreword" at the beginning of this publication.

NO SCALE

ES-7C

2002 DUAL UNITS STD PLAN ES-7C

THIS STANDARD PLAN ES-7C INCLUDES CHANGES THAT WERE INCORPORATED IN REVISED STANDARD PLAN RSP ES-7C, DATED OCTOBER 26, 2000, AND ISSUED AS A PART OF ERRATUM NO. 99-1 FOR THE 1999 METRIC STANDARD PLANS.