DIST	COUNTY	ROUTE	KILOMETER POST TOTAL PROJECT	SHEET NO.	TOTAL SHEETS

REGISTERED CIVIL ENGINEER

July 1, 2002
PLANS APPROVAL DATE

REGISTERED PROFESSIONAL ENGINEER Jeffrey B. Woody No. C41260 Exp. 3-31-03 CIVIL STATE OF CALIFORNIA

The State of California or its officers or agents shall not be responsible for the accuracy or completeness of electronic copies of this plan sheet.

Caltrans now has a web site! To get to the web site, go to: http://www.dot.ca.gov

2002 DUAL UNITS STD PLAN ES-6D

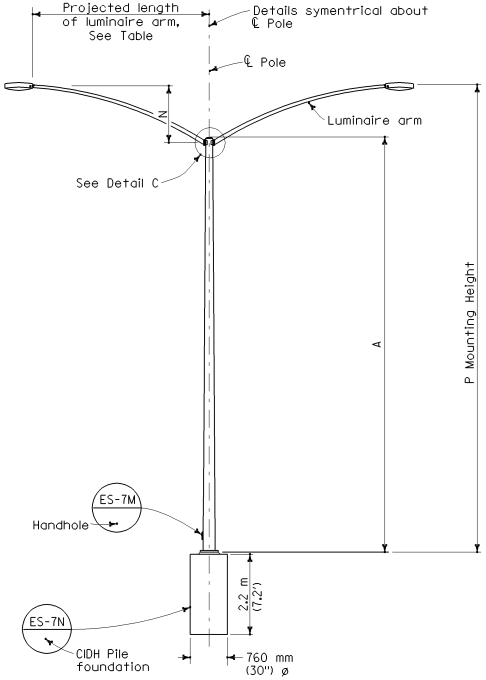

ELEVATION
TYPE 15D
TYPE 22D

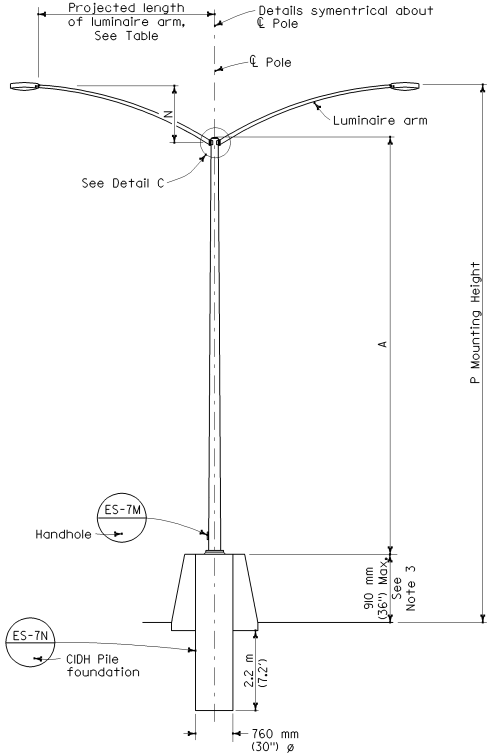

ELEVATION
TYPE 15D MEDIAN BARRIER MOUNTED
TYPE 21D MEDIAN BARRIER MOUNTED

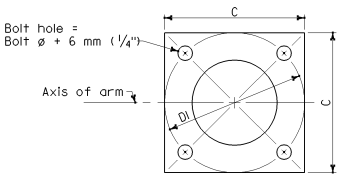

BASE PLATE

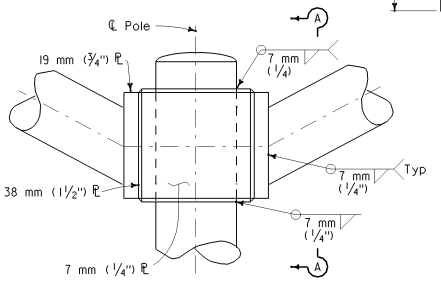

DETAIL C

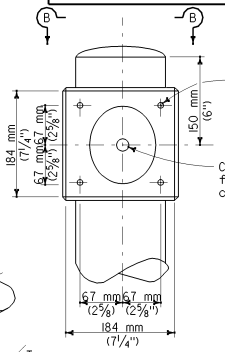

SECTION A-A

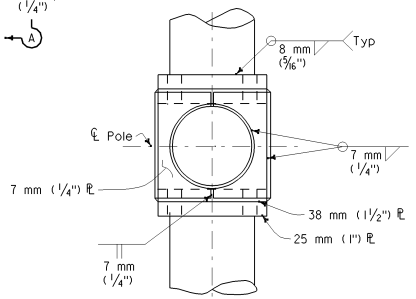

SECTION B-B

POLE TYPE	POLE DATA				BASE PLATE DATA				
	A Height	Min OD		Min Thickness	C	DI Bolt Circle	Thick-ness	Anchor Bolts	
		Base	Top					Size	Bolt Circle
15D	9.1 m (30')	203 mm (8")	98 mm (3 7/8")	4.55 mm (0.1793")	305 mm (12")	305 mm (12")	25 mm (1")	32 mm ø x 1067 mm x 152 mm (1 1/4" ø x 42" x 6")	305 mm (12")
21D	10.7 m (35')	219 mm (8 5/8")	98 mm (3 7/8")	4.55 mm (0.1793")					
22D	10.7 m (35')	219 mm (8 5/8")	98 mm (3 7/8")	4.55 mm (0.1793")					

HIGH STRENGTH CAP SCREWS
16 mm (5/8") - 11NC - 45 mm (1 3/4")
Length, mm (inches)
Threads per inch
Size, mm (inches)

NOTES

1. ☐ indicates arm length to be used unless otherwise noted on the plans.
2. For additional notes, see Standard Plan ES-7M.
3. See Concrete Barrier Details Type 50E, 60E and 60SE.

LUMINAIRE ARM DATA							
Projected Length	N Rise	Min OD at Pole	Nominal Thickness	P Mounting Height			
				Type 15D	Type 22D	Type 15D 910 mm (36") Barrier	Type 21D 910 mm (36") Barrier
1.8 m (6')	610 mm (24") ±	83 mm (3 1/4")	3.04 mm (0.1196")	9.6 m (31.5') ±	11.1 m (36.5') ±	10.5 m (34.5') ±	12.0 m (39.4') ±
2.4 m (8')	760 mm (30") ±	89 mm (3 1/2")	3.04 mm (0.1196")	9.8 m (32.0') ±	11.3 m (37.0') ±	10.7 m (35.1') ±	12.2 m (40.0') ±
3.1 m (10')	990 mm (39") ±	98 mm (3 7/8")	3.04 mm (0.1196")	10.0 m (32.75') ±	11.5 m (37.75') ±	10.9 m (35.8') ±	12.4 m (40.7') ±
3.7 m (12')	1290 mm (51") ±	98 mm (3 7/8")	3.04 mm (0.1196")	10.3 m (33.75') ±	11.8 m (38.75') ±	11.2 m (36.7') ±	12.7 m (41.7') ±

STATE OF CALIFORNIA
DEPARTMENT OF TRANSPORTATION

LIGHTING STANDARDS TYPE 15D, 21D AND 22D DOUBLE LUMINAIRE ARM

These "Standard Plans for Construction of Local Streets and Roads" contain units in two systems of measurement: International System of Units (SI or "metric") and United States Standard Measures shown in the parentheses ( ). The measurements expressed in the two systems are not necessarily equal or interchangeable. See the "Foreword" at the beginning of this publication.

NO SCALE

ES-6D