DIST	COUNTY	ROUTE	KILOMETER POST TOTAL PROJECT	SHEET NO.	TOTAL SHEETS

Theresa Gabriel
REGISTERED ELECTRICAL ENGINEER

July 1, 2002
PLANS APPROVAL DATE

REGISTERED PROFESSIONAL ENGINEER
Theresa A. Gabriel
No. E15129
Exp. 6-30-04
ELECTRICAL
STATE OF CALIFORNIA

The State of California or its officers or agents shall not be responsible for the accuracy or completeness of electronic copies of this plan sheet.

Caltrans now has a web site! To get to the web site, go to: http://www.dot.ca.gov

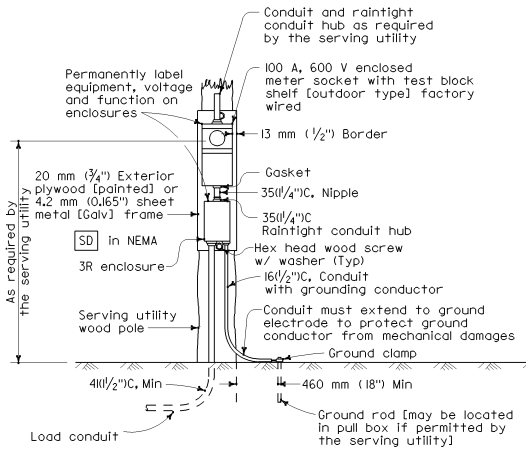

TYPE SCE-1 SERVICE

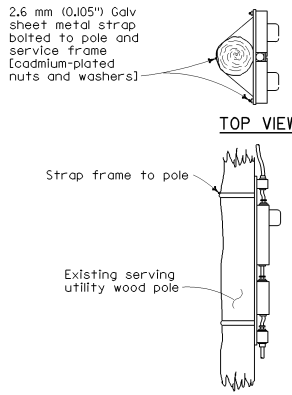

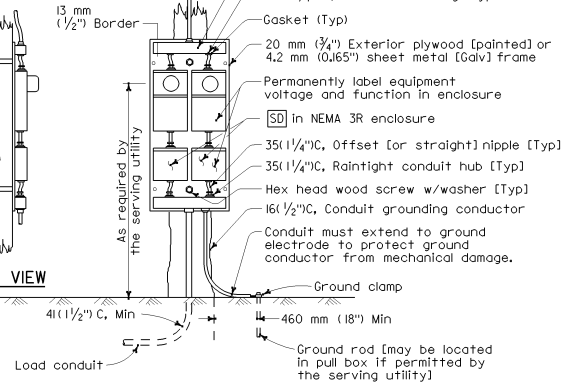

TYPE SCE-2 SERVICE

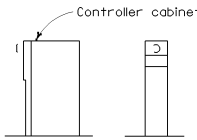

TYPE OF SERVICE (TYPICAL)

Type II service equipment enclosure mounted on a side of a controller cabinet. Type III complete free-standing service equipment enclosure.

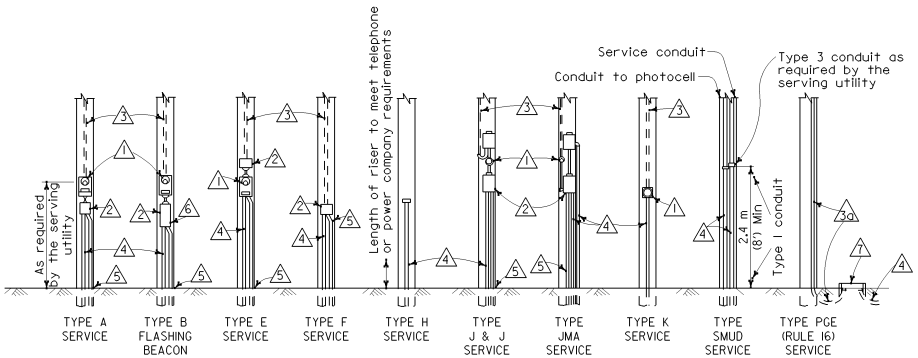

POLE MOUNTED SERVICE INSTALLATIONS

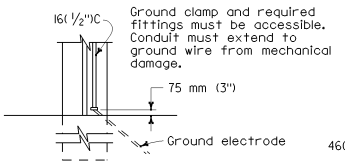

TYPE A

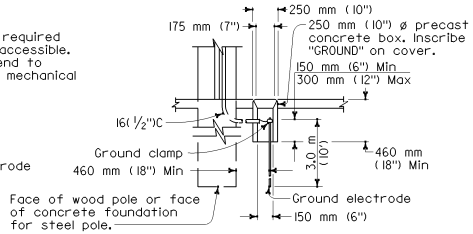

TYPE B

Use where serving utility requires 460 mm (18") clearance between ground rod and pole or service cabinet. Installation shown is for sidewalk or paved areas. In unpaved areas, omit special box and locate ground clamp above ground or loctate ground clamp in nearest pull box.

NOTES

1. Meter socket.
2. Service enclosure 60 A size minimum, unless otherwise shown.
3. (a) Utility owned pole. Service riser [and contractor with PEU where required] furnished and installed by the serving utility.

   (b) State owned pole. Service riser and all other required equipment furnished and installed by Contractor.
4. Conduit, length and size as required.
5. Ground conduit, 16(1/2")C, #6 AWG bare copper. See "Service Grounding" detail.
6. Flashing beacon control assembly.
7. Service pull box, No. 5 [E] unless otherwise noted, furnished and installed by Contractor. Exact location determined by the serving utility.

SERVICE GROUNDING

STATE OF CALIFORNIA
DEPARTMENT OF TRANSPORTATION

SIGNAL, LIGHTING AND ELECTRICAL SYSTEMS SERVICE EQUIPMENT

These "Standard Plans for Construction of Local Streets and Roads" contain units in two systems of measurement: International System of Units (SI or "metric") and United States Standard Measures shown in the parentheses ( ). The measurements expressed in the two systems are not necessarily equal or interchangeable. See the "Foreword" at the beginning of this publication.

NO SCALE

ES-2A

2002 DUAL UNITS STD PLAN ES-2A