DIST	COUNTY	ROUTE	KILOMETER POST TOTAL PROJECT	SHEET NO.	TOTAL SHEETS

Paul Cotter
REGISTERED CIVIL ENGINEER

July 1, 2002
PLANS APPROVAL DATE

REGISTERED PROFESSIONAL ENGINEER Paul Cotter No. C34509 Exp. 9-30-03 CIVIL STATE OF CALIFORNIA

The State of California or its officers or agents shall not be responsible for the accuracy or completeness of electronic copies of this plan sheet.

Caltrans now has a web site! To get to the web site, go to: http://www.dot.ca.gov

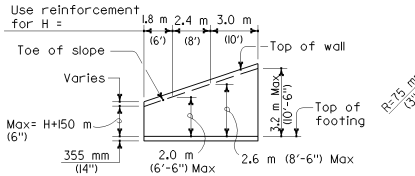

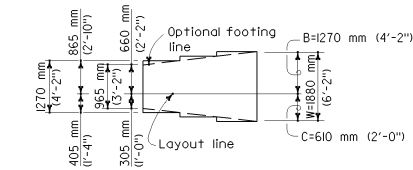

TYPICAL LAYOUT EXAMPLE

Number above "b" & "c" bars indicates distance from top of footing to upper end of bars. Bar cutoffs may be varied in increments of 150 mm (6").

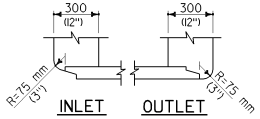

RC PIPE DETAILS

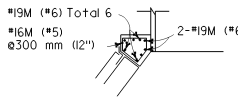

SECTION C-C

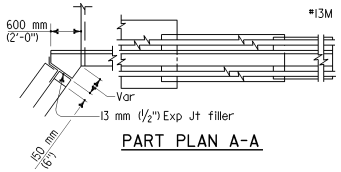

PART PLAN A-A

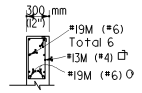

SECTION D-D

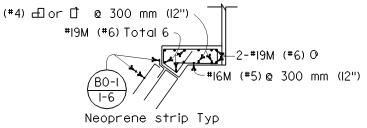

SECTION B-B

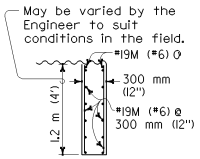

SECTION E-E

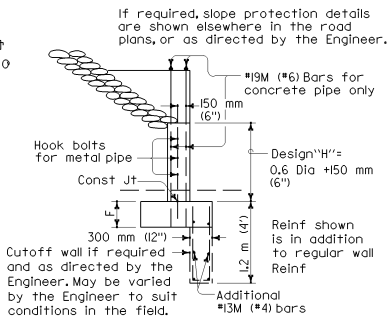

SECTION F-F

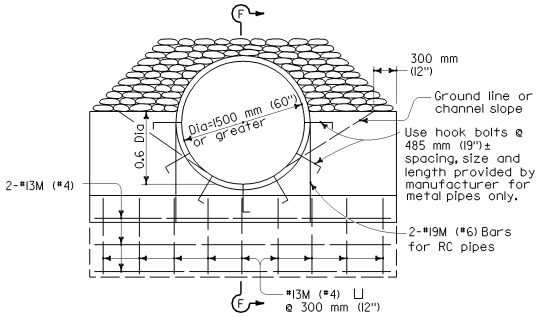

TYPE C WALL

NOTES

Unit Stresses: f_s = 165 MPa (24,000 psi), f_c = 9 MPa (1,300 psi), n = 10
Maximum Toe Pressure = 144 kPa (3 k/sf).
Elevation, length and angle of flare of wings may be varied by the Engineer to suit conditions encountered in the field. Walls designed for 600 mm (2') live load surcharge, 1:1.5 (1.1:5) sloping surcharge not to exceed 1.5 m (5') in elevation plus 600 mm (24") live load surcharge, or unlimited 1:2 (2:1) surcharge. If 1:1.5 (1½:1) slope exceeds 1.5 m (5'), use Type 2 retaining wall. Wall height may be exceeded by 150 mm (6") before going to the next greater "H".

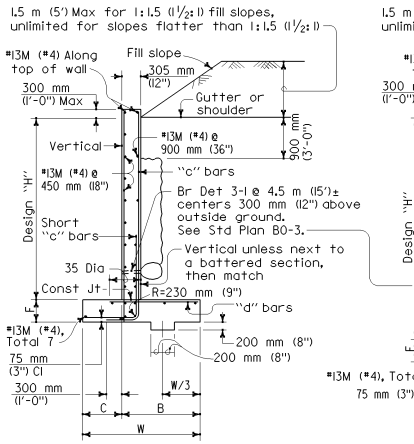

TYPICAL SECTION
H=1.2 m (4') THRU 3.7 m (12')

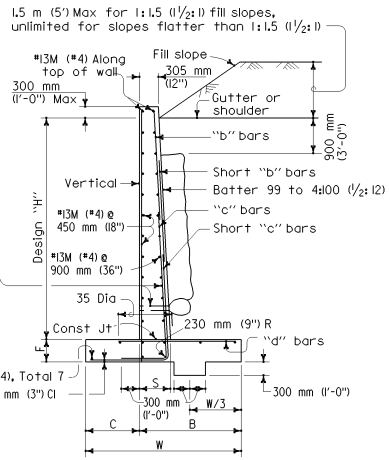

TYPICAL SECTION
H=4.0 m (13') THRU 6.1 m (20')

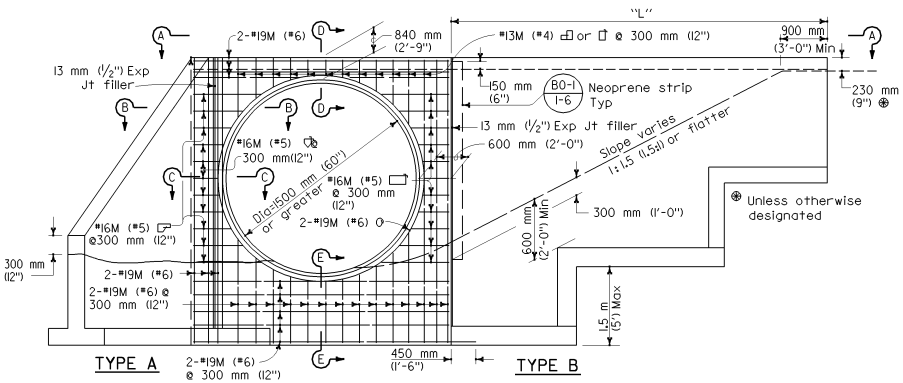

TYPE A

END ELEVATION
STRAIGHT WINGWALLS

TYPE B

For footing step dimensions and reinforcement see "Footing Step" on Std Plan B3-8.

STATE OF CALIFORNIA
DEPARTMENT OF TRANSPORTATION

PIPE CULVERT HEADWALLS, ENDWALLS AND WINGWALLS TYPES A, B AND C

These "Standard Plans for Construction of Local Streets and Roads" contain units in two systems of measurement: International System of Units (SI or "metric") and United States Standard Measures shown in the parentheses ( ). The measurements expressed in the two systems are not necessarily equal or interchangeable. See the "Foreword" at the beginning of this publication.

NO SCALE

D90A