DIST	COUNTY	ROUTE	KILOMETER POST TOTAL PROJECT	SHEET NO.	TOTAL SHEETS

Paul Cotter
REGISTERED CIVIL ENGINEER

July 1, 2002
PLANS APPROVAL DATE

REGISTERED PROFESSIONAL ENGINEER — Paul Cotter — No. C34509 — Exp. 9-30-03 — CIVIL — STATE OF CALIFORNIA

The State of California or its officers or agents shall not be responsible for the accuracy or completeness of electronic copies of this plan sheet.

Caltrans now has a web site! To get to the web site, go to: http://www.dot.ca.gov

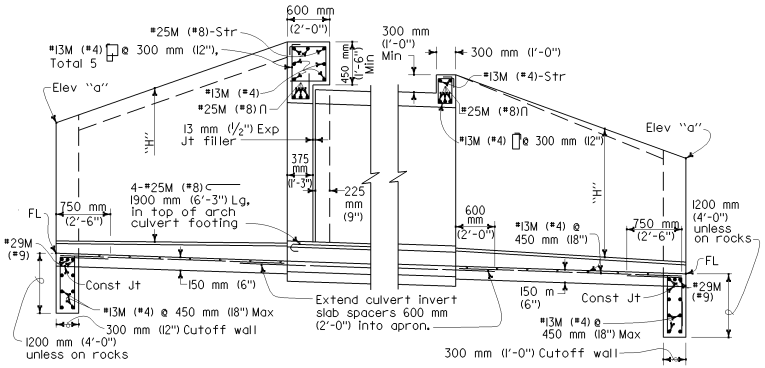

TYPICAL FOR MAXIMUM "H" > 3.0 m (10') TYPICAL FOR MAXIMUM "H" ≤ 3.0 m (10')

PART LONGITUDINAL SECTION

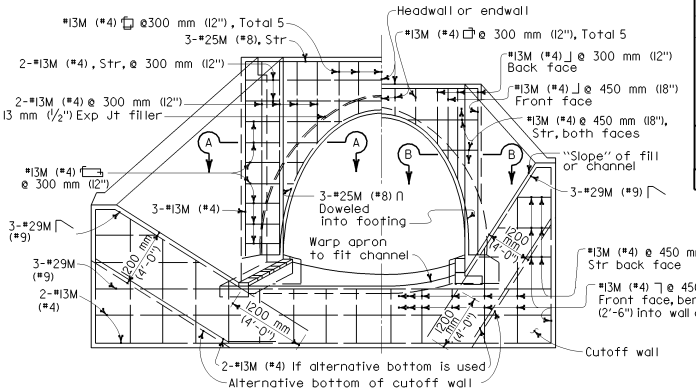

TYPICAL FOR MAXIMUM "H" > 3.0 m (10') TYPICAL FOR MAXIMUM "H" ≤ 3.0 m (10')

END ELEVATION

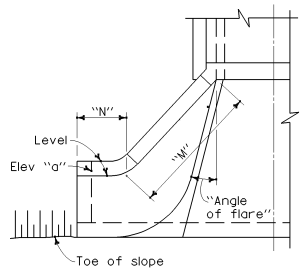

ALTERNATIVE WARPED WINGWALL

Use where additional protection to toe of embankment is required.

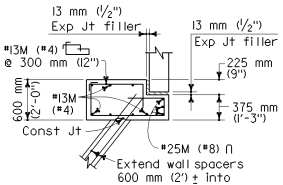

SECTION A-A

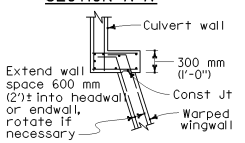

SECTION B-B

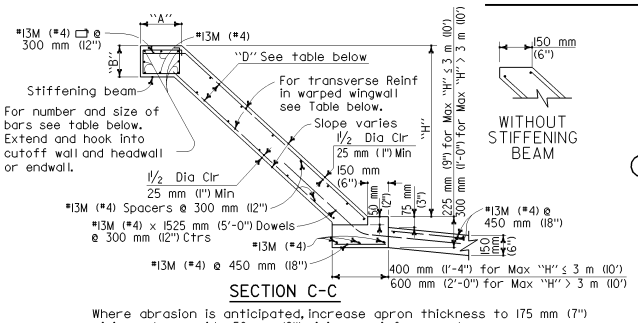

SECTION C-C

Where abrasion is anticipated, increase apron thickness to 175 mm (7") minimum to provide 50 mm (2") minimum reinforcement coverage.

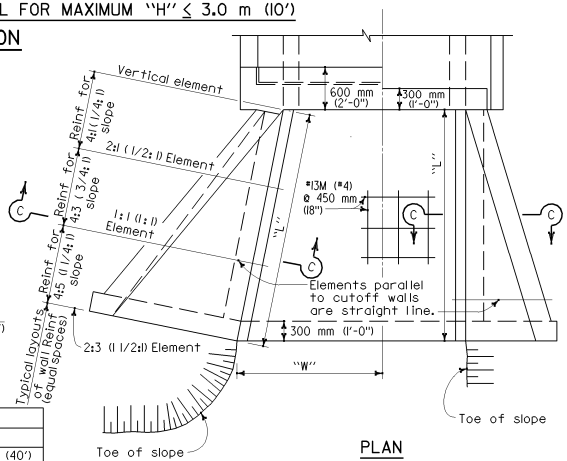

PLAN

WARPED WINGWALLS

WALL DIMENSIONS AND REINFORCING

Element Slope	"H"	2.4 m (8') or less	3.0 m (10')	3.7 m (12')	4.3 m (14')	4.9 m (16')	5.5 m (18')	6.1 m (20')
4:1 (1/4:1)	Front face Reinf	#13M (#4) @300 mm (12")	#13M (#4) @175 mm (7")	#16M (#5) @175 mm (7")	#16M (#5) @125 mm (5")	#19M (#6) @150 mm (6")	#22M (#7) @175M mm (7")	#22M (#7) @150M mm (6")
	Rear face Reinf	#13M (#4) @300 mm (12")	#13M (#4) @300 mm (12")	#13M (#4) @300 mm (12")	#13M (#4) @300 mm (12")	#13M (#4) @300 mm (12")	#13M (#4) @300 mm (12")	#13M (#4) @300 mm (12")
4:3 (3/4:1)	Front face Reinf	#13M (#4) @300 mm (12")	#13M (#4) @300 mm (12")	#13M (#4) @300 mm (12")	#13M (#4) @300 mm (12")	#13M (#4) @250 mm (10")	#13M (#4) @200 mm (8")	#13M (#4) @150 mm (6")
	Rear face Reinf	#13M (#4) @300 mm (12")	#13M (#4) @300 mm (12")	#13M (#4) @300 mm (12")	#13M (#4) @250 mm (10")	#13M (#4) @175 mm (7")	#13M (#4) @150 mm (6")	#16M (#5) @200 mm (8")
4:5 (1 1/4:1)	Front face Reinf	#13M (#4) @300 mm (12")	#13M (#4) @300 mm (12")	#13M (#4) @300 mm (12")	#13M (#4) @300 mm (12")	#13M (#4) @300 mm (12")	#13M (#4) @300 mm (12")	#13M (#4) @300 mm (12")
	Rear face Reinf	#13M (#4) @200 mm (8")	#13M (#4) @200 mm (8")	#13M (#4) @125 mm (5")	#16M (#5) @150 mm (6")	#19M (#6) @175 mm (7")	#19M (#6) @150 mm (6")	#22M (#7) @150 mm (6")
"D" at Cutoff Wall mm (in)		150 mm (6")	150 mm (6")	150 mm (6")	190 mm (7 1/2")	200 mm (8")	240 mm (9 1/2")	280 mm (11")
"D" at Culvert mm (in)		150 mm (6")	150 mm (6")	150 mm (6")	200 mm (8")	240 mm (9 1/2")	280 mm (11")	330 mm (1'-1")

STIFFENING BEAM DIMENSIONS AND REINFORCING

"H" Max \ "L"	3.7 m (12')	4.3 m (14')	4.9 m (16')	5.5 m (18')	6.1 m (20')	7.6 m (25')	9.1 m (30')	10.7 m (35')	12.2 m (40') or more
1.8 m (6')	No beam. Place 2-#19M (#6) in each each face along top of wall								
2.4 m (8')		"A"= 300 mm (1'-0")							
3.0 m (10')	"B"= 225 mm (9")								
3.7 m (12')						"A"= 450 mm (1'-6")		"A"= 560 mm (1'-10")	
4.3 m (14')	Total 6-#19M (#6)				"B"= 300 mm (1'-0")		"B"= 300 mm (1'-0")		
4.9 m (16')							Total 6-#25M (#8)		"A"= 600 mm (2'-0")
5.5 m (18')			Total 6-#22M (#7)						"B"= 450 mm (1'-6")
6.1 m (20')							Total 8-#29M (#9)		

NOTES:

Walls designed for 600 mm (2') surcharge; earth density = 1900 kg/m^3 (120LB/CU FT); equivalent fluid pressure = 5.66 KPa/m (36LB/CU FT). Vary "D" of warped wall uniformly from that at cuttoff wall to that at culvert, for maximum "H" > 3.7 m (12') Dimensions "L", "W", "H", "M", "N", Elevation "a", "Angle of flare" and "Slope" (as apply) are shown on the plans.

STATE OF CALIFORNIA
DEPARTMENT OF TRANSPORTATION

ARCH CULVERT HEADWALLS, ENDWALLS AND WARPED WINGWALLS

These "Standard Plans for Construction of Local Streets and Roads" contain units in two systems of measurement: International System of Units (SI or "metric") and United States Standard Measures shown in the parentheses (). The measurements expressed in the two systems are not necessarily equal or interchangeable. See the "Foreword" at the beginning of this publication.

NO SCALE

D86C

2002 DUAL UNITS STD PLAN D86C