DIST	COUNTY	ROUTE	KILOMETER POST TOTAL PROJECT	SHEET NO.	TOTAL SHEETS

REGISTERED CIVIL ENGINEER

July 1, 2002
PLANS APPROVAL DATE

REGISTERED PROFESSIONAL ENGINEER Overcomer Y. Hor No. C45803 Exp. 12-31-02 CIVIL STATE OF CALIFORNIA

The State of California or its officers or agents shall not be responsible for the accuracy or completeness of electronic copies of this plan sheet.

Caltrans now has a web site! To get to the web site, go to: http://www.dot.ca.gov

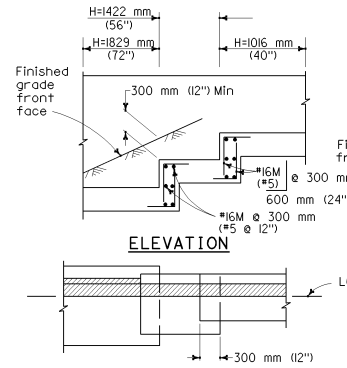

ELEVATION

PLAN

FOOTING STEP DETAILS

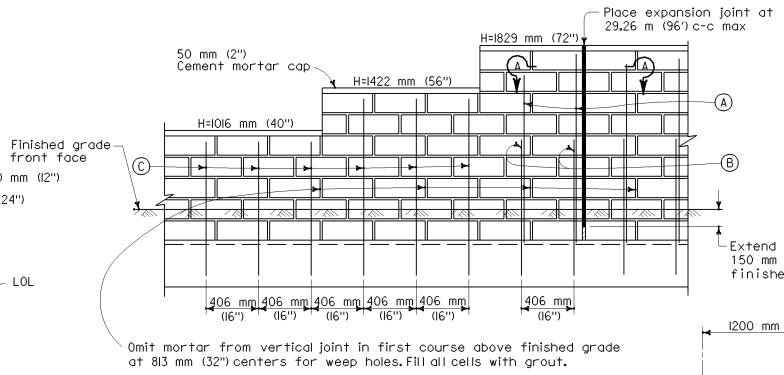

ELEVATION - MASONRY CONSTRUCTION

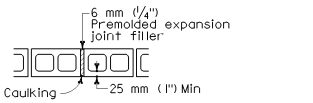

SECTION A-A

DESIGN DATA

Masonry: f_m = 3.5 MPa (500 psi) f'_m = 10.5 MPa (1,500 psi)
f_s = 168 MPa (24,000 psi) n = 20

Reinforced Concrete: f_c = 10 MPa (1,450 psi) f'_c = 25 MPa (3,600 psi)
f_s = 168 MPa (24,000 psi) n = 10

Earth = 19 kN/m^3 (120 lb/cf)

Minimum allowable soil bearing capacity of foundation material = 95 kPa (2.0 k/sf)

Design loading : Case I and Case II, see B3-8

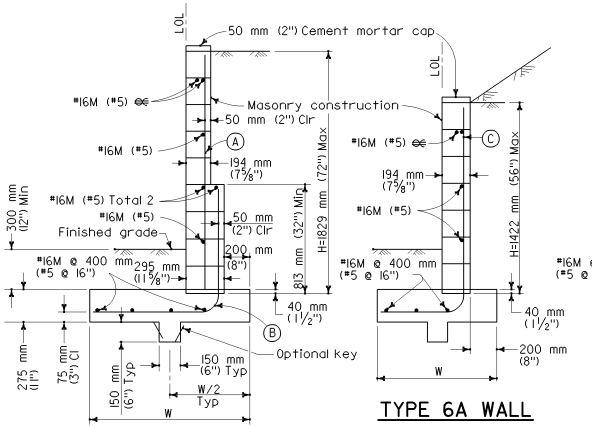

TYPE 6A WALL

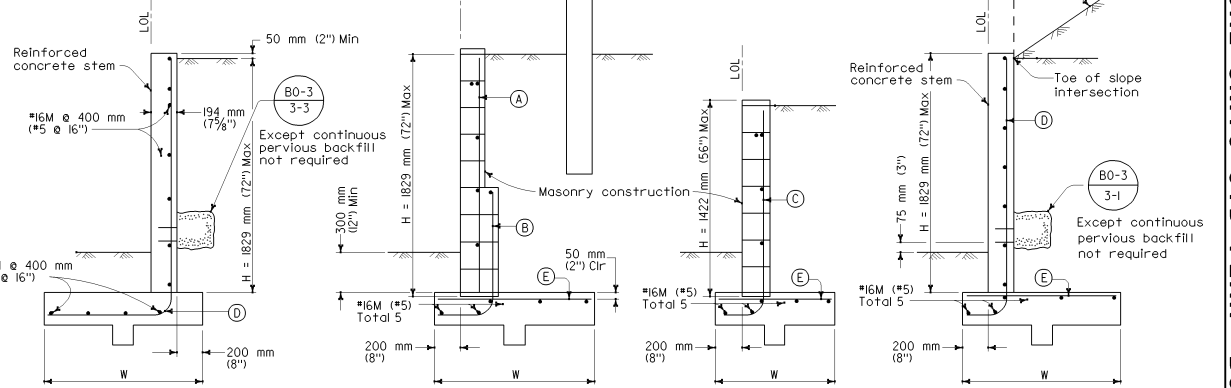

TYPE 6B WALL

Type	Design H mm (in)	1016 (40)	1219 (48)	1422 (56)	1626 (64)	1829 (72)
6A	W mm (in)	1000 (39)	1100 (43)	1200 (47)	1300 (51)	1400 (55)
6A	(A) #M @ mm (# @ in)				#16M@406 (#5@16)	#16M@406 (#5@16)
6A	(B) #M @ mm (# @ in)				#16M@406 (#5@16)	#16M@406 (#5@16)
6A	(C) #M @ mm (# @ in)	#16M@406 (#5@16)	#16M@406 (#5@16)	#16M@406 (#5@16)		
6A	(D) #M @ mm (# @ in)	#16M@375 (#5@15)	#16M@375 (#5@15)	#16M@375 (#5@15)	#16M@375 (#5@15)	#16M@375 (#5@12)

NOTES

1. For details not shown at "6B", see "6A".
2. Type 6 retaining wall shall be limited to use for walls of Design H of 1829 mm (72") or less.
3. Where traffic is adjacent to the top of wall, guard rails should be set back from the top front face of wall at least 1200 mm (4').
4. Unless otherwise stipulated, the contractor will have the option of constructing the Type 6 walls of either masonry or reinforced concrete.
5. For reinforced concrete wall stem joint details, See B0-3 3-3 and B0-3 3-4.
6. No splices are allowed on (A), (B) and (C) bars.
7. At (D) bar, no splices are allowed within 500 mm (20") above the top of footing.

Type	Design H mm (in)	1016 (40)	1219 (48)	1422 (56)	1626 (64)	1829 (72)
6B	W mm (in)	850 (33)	950 (37)	1050 (41)	1150 (45)	1250 (49)
6B	(A) #M @ mm (# @ in)				#16M@406 (#5@16)	#16M@406 (#5@16)
6B	(B) #M @ mm (# @ in)				#16M@406 (#5@16)	#16M@406 (#5@16)
6B	(C) #M @ mm (# @ in)	#16M@406 (#5@16)	#16M@406 (#5@16)	#16M@406 (#5@16)		
6B	(D) #M @ mm (# @ in)	#16M@406 (#5@15)	#16M@406 (#5@15)	#16M@406 (#5@15)	#16M@406 (#5@15)	#16M@406 (#5@12)
6B	(E) #M @ mm (# @ in)	#16M@406 (#5@15)	#16M@406 (#5@15)	#16M@406 (#5@15)	#16M@406 (#5@15)	#16M@406 (#5@12)

STATE OF CALIFORNIA
DEPARTMENT OF TRANSPORTATION

RETAINING WALL TYPE 6 1829 mm (6') MAXIMUM

These "Standard Plans for Construction of Local Streets and Roads" contain units in two systems of measurement: International System of Units (SI or "metric") and United States Standard Measures shown in the parentheses ( ). The measurements expressed in the two systems are not necessarily equal or interchangeable. See the "Foreword" at the beginning of this publication.

NO SCALE

B3-11

2002 DUAL UNITS STD PLAN B3-11

THIS STANDARD PLAN B3-11 INCLUDES CHANGES THAT WERE INCORPORATED IN REVISED STANDARD PLAN RSP B3-11, DATED OCTOBER 26, 2000, AND ISSUED AS A PART OF ERRATUM NO. 99-1 FOR THE 1999 METRIC STANDARD PLANS.