DIST	COUNTY	ROUTE	KILOMETER POST TOTAL PROJECT	SHEET NO.	TOTAL SHEETS

Daniel T. Adams
REGISTERED CIVIL ENGINEER

July 1, 2002
PLANS APPROVAL DATE

REGISTERED PROFESSIONAL ENGINEER
Daniel T. Adams
No. C46476
Exp. 6-30-03
CIVIL
STATE OF CALIFORNIA

The State of California or its officers or agents shall not be responsible for the accuracy or completeness of electronic copies of this plan sheet.

Caltrans now has a web site! To get to the web site, go to: http://www.dot.ca.gov

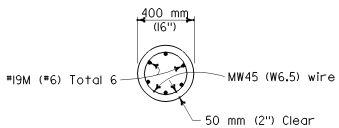

SECTION A-A

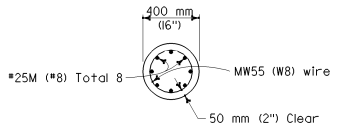

SECTION B-B

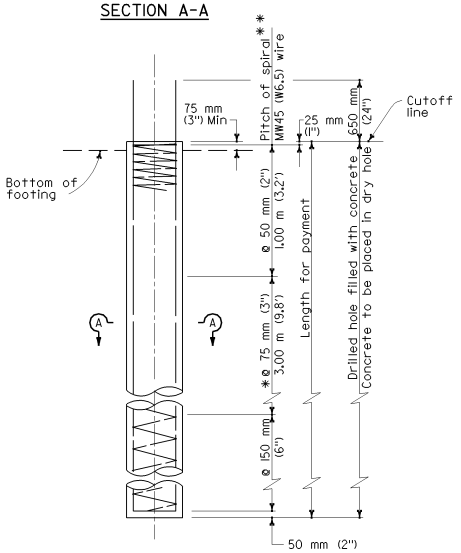

ELEVATION

400 KILONEWTON (45 ton) AND 625 KILONEWTON (70 ton) DESIGN CAPACITY

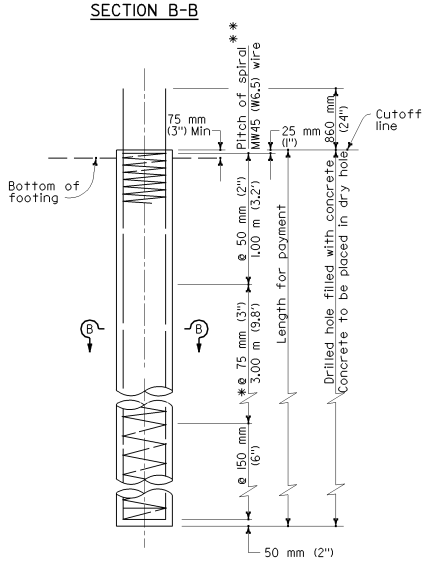

ELEVATION

900 KILONEWTON (100 ton) DESIGN CAPACITY

* @ 50 mm (2") at option of contractor.

** Extend at 50 mm (2") pitch to top of anchor piles and load test piles. For additional longitudinal reinforcement for anchor piles and load test piles, see "Load Test Piles Details (2)", Standard Plan B2-10.

NOTES

Reinforcement extending into footing shall be hooked as required to provide clearance to top of footing.

Lapped splices in sprial pile reinforcement shall be lapped at least 80 wire diameters. Sprial pile reinforcement at splices and at ends shall be terminated with a 135° hook with a 150 mm (6") tail hooked around a longitudinal bar.

Piles shall be extended only in accordance with details shown in the Project Plans.

DESIGN NOTES

Reinforced Concrete
fy = 420 MPa (60,000 psi)
f'c = 28 MPa (4,000 psi)

DESIGN CAPACITY

400 KILONEWTON (45 ton) and 625 KILONEWTON (70 ton) Pile

Compression =
625 kN (70 ton) [Service state]
1250 kN (140 ton) [Nominal axial resistance]

Tension =
625 kN (70 ton) [Nominal axial resistance]

900 KILONEWTON (100 ton) Pile

Compression =
900 kN (100 ton) [Service state]
1800 kN (200 ton) [Nominal axial resistance]

Tension =
900 kN (100 ton) [Nominal axial resistance]

STATE OF CALIFORNIA
DEPARTMENT OF TRANSPORTATION

400 mm (16") CAST-IN-DRILLED-HOLE CONCRETE PILE

These "Standard Plans for Construction of Local Streets and Roads" contain units in two systems of measurement: International System of Units (SI or "metric") and United States Standard Measures shown in the parentheses ( ). The measurements expressed in the two systems are not necessarily equal or interchangeable. See the "Foreword" at the beginning of this publication.

NO SCALE

B2-3

2002 DUAL UNITS STD PLAN B2-3