DIST	COUNTY	ROUTE	KILOMETER POST TOTAL PROJECT	SHEET NO.	TOTAL SHEETS

REGISTERED CIVIL ENGINEER

July 1, 2002
PLANS APPROVAL DATE

REGISTERED PROFESSIONAL ENGINEER
Ellis K. Hirst
No. C17926
Exp. 6-30-05
CIVIL
STATE OF CALIFORNIA

The State of California or its officers or agents shall not be responsible for the accuracy or completeness of electronic copies of this plan sheet.

Caltrans now has a web site! To get to the web site, go to: http://www.dot.ca.gov

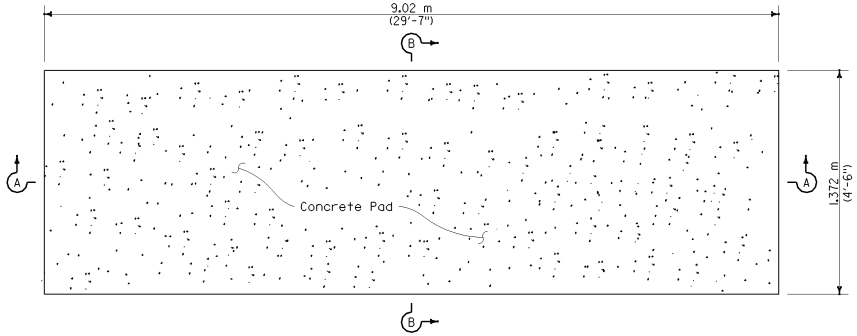

PLAN VIEW

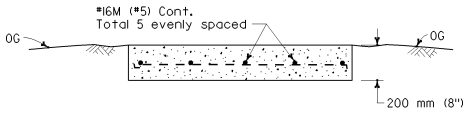

SECTION B-B

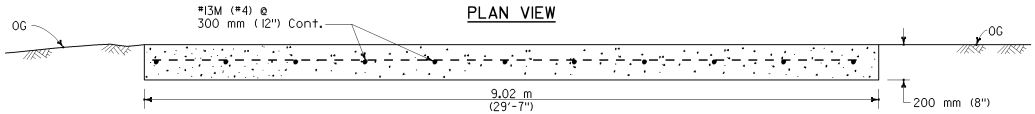

SECTION A-A

CONCRETE ANCHOR SLAB

NOTES

1. For additional details of this crash cushion, refer to manufacturer's installation instructions.
2. For details of the REACT Crash Cushion with self contained backup support (no concrete backup block), see Standard Plan A82D.
3. The base track frame with cylinders attached comes from the manufacturer as a completely pre-assembled unit.
4. Place the crash cushion unit on the cured concrete anchor slab and use the base track frame of the crash cushion as a template for drilling anchor bolt holes. Drill holes in slab and attach crash cushion with wedge anchor bolts supplied by the manufacturer.
5. Attach last cylinder to concrete backup block with manufacturer supplied fastener in such manner as recommended by the manufacturer.
6. Attach the manufacturer supplied side cable anchor plates to the cured concrete backup block with the manufacturer supplied bolts in such manner as recommended by the manufacturer.
7. Place manufacturer supplied cover over cylinders and attach cover to cylinders with manufacturer supplied fasteners.

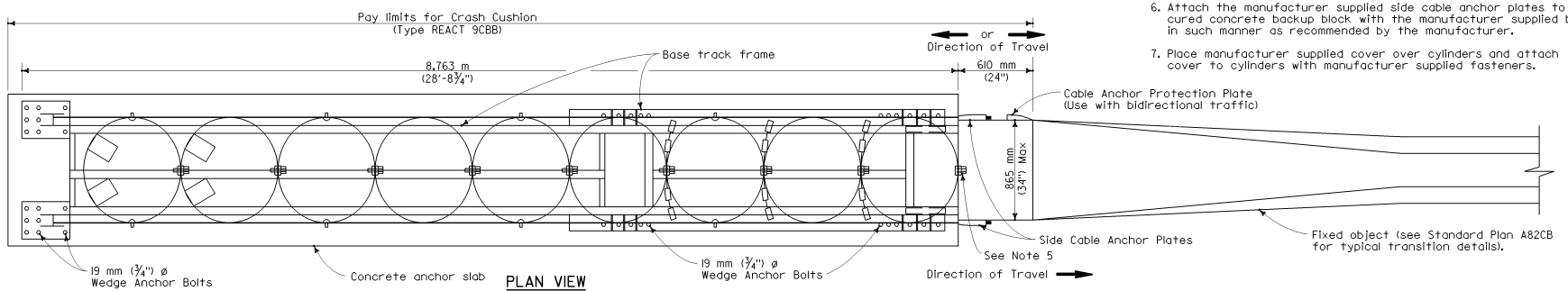

PLAN VIEW

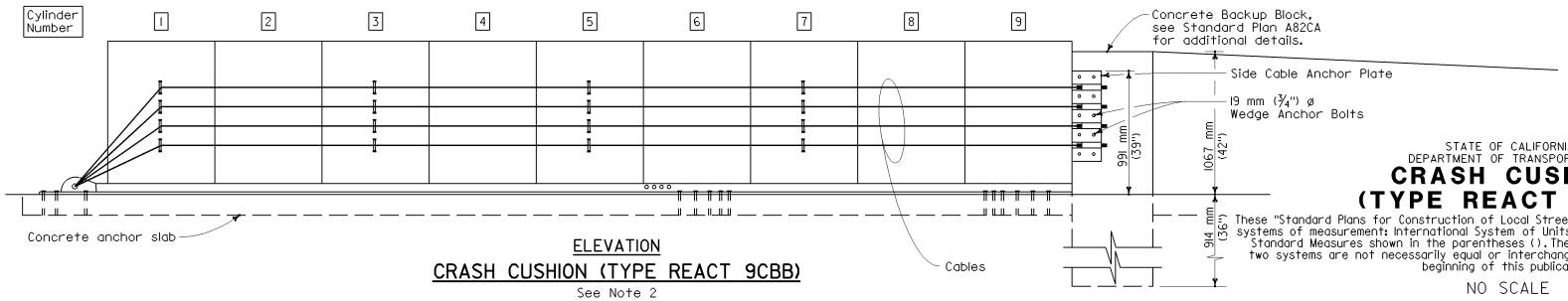

ELEVATION

CRASH CUSHION (TYPE REACT 9CBB)

See Note 2

STATE OF CALIFORNIA
DEPARTMENT OF TRANSPORTATION

CRASH CUSHION
(TYPE REACT 9CBB)

These "Standard Plans for Construction of Local Streets and Roads" contain units in two systems of measurement: International System of Units (SI or "metric") and United States Standard Measures shown in the parentheses ( ). The measurements expressed in the two systems are not necessarily equal or interchangeable. See the "Foreword" at the beginning of this publication.

NO SCALE

A82C

2002 DUAL UNITS STD PLAN A82C