DIST	COUNTY	ROUTE	POST MILES TOTAL PROJECT	SHEET NO.	TOTAL SHEETS

REGISTERED CIVIL ENGINEER

July 1, 2002
PLANS APPROVAL DATE

REGISTERED PROFESSIONAL ENGINEER Ellis K. Hirst No. C17926 Exp. 6-30-05 CIVIL STATE OF CALIFORNIA

The State of California or its officers or agents shall not be responsible for the accuracy or completeness of electronic copies of this plan sheet.

Caltrans now has a web site! To get to the web site, go to: http://www.dot.ca.gov

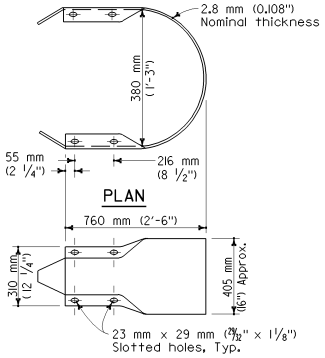

ELEVATION

RETURN SECTION

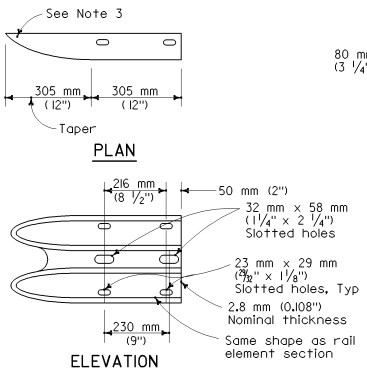

ELEVATION

END SECTION DETAILS

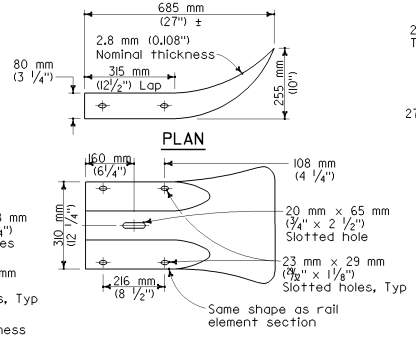

ELEVATION

TERMINAL SECTION (TYPE B)

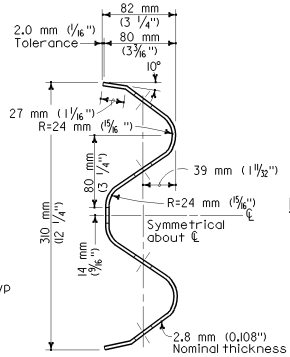

SECTION THRU RAIL ELEMENT

NOTES

1. Terminal sections not to be installed on the trailing end of guard railing constructed adjacent to one-way roadways.
2. For use and details of back-up plates, see Standard Plans A77J and A77K.
3. End Section may be cut from Terminal Section (Type B) or fabricated.
4. Use for nested railing applications.
5. Terminal Section "Type A" has been deleted.
6. Use flat plate washer where indicated on plans.

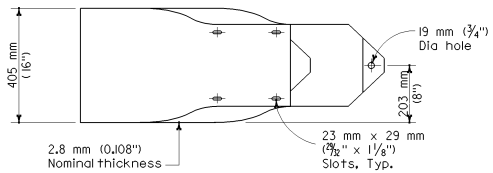

ELEVATION

TERMINAL SECTION (TYPE C)

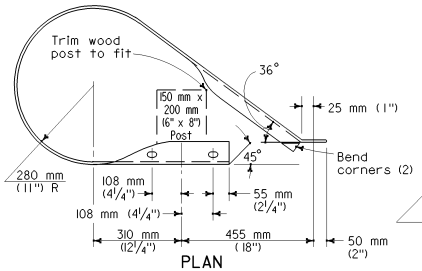

PLAN

TERMINAL SECTION (TYPE C) DETAIL A

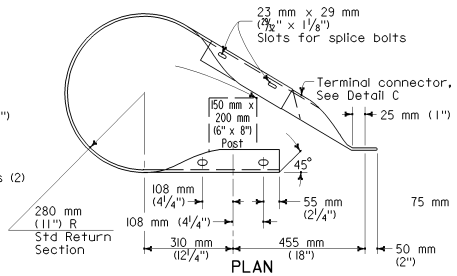

PLAN

OPTIONAL DESIGN TERMINAL SECTION (TYPE C) DETAIL B

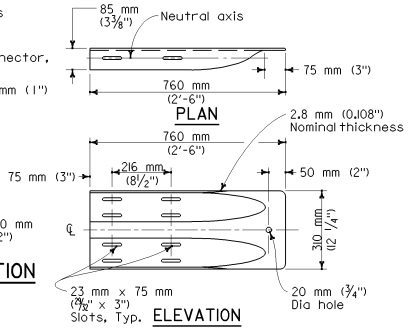

ELEVATION

TERMINAL CONNECTOR FOR OPTIONAL DESIGN TERMINAL SECTION (TYPE C) DETAIL C

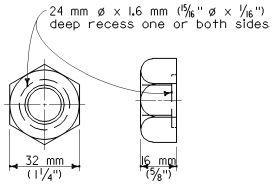

16 mm (5/8") ø RECESS NUT

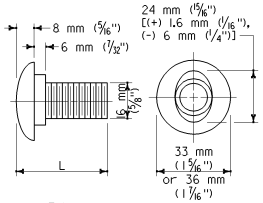

16 mm (5/8") ø BUTTON HEAD BOLT

L	THREAD LENGTH
35 mm (1 3/8")	full thread length
50 mm (2")	full thread length
255 mm (10")	100 mm (4") Min thread length
460 mm (18")	100 mm (4") Min thread length
••70 mm (2 3/4")	50 mm (2") Min thread length
••480 mm (19")	100 mm (4") Min thread length

•• SEE NOTE 4

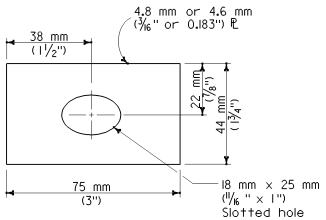

FLAT PLATE WASHER

See Note 6

STATE OF CALIFORNIA
DEPARTMENT OF TRANSPORTATION

METAL BEAM GUARD RAILING STANDARD HARDWARE

These "Standard Plans for Construction of Local Streets and Roads" contain units in two systems of measurement: International System of Units (SI or "metric") and United States Standard Measures shown in the parentheses (). The measurements expressed in the two systems are not necessarily equal or interchangeable. See the "Foreword" at the beginning of this publication.

NO SCALE

A77B