DIST	COUNTY	ROUTE	POST MILES TOTAL PROJECT	SHEET No.	TOTAL SHEETS
07	LA,Ora	5	0.0/1.5, 44.3/44.4	1601	1622

William Kemp 3-18-15
REGISTERED CIVIL ENGINEER DATE

1-25-16
PLANS APPROVAL DATE

REGISTERED PROFESSIONAL ENGINEER William D. Kemp No. 55730 Exp. 12/31/16 CIVIL STATE OF CALIFORNIA

The State of California or its officers or agents shall not be responsible for the accuracy or completeness of scanned copies of this plan sheet.

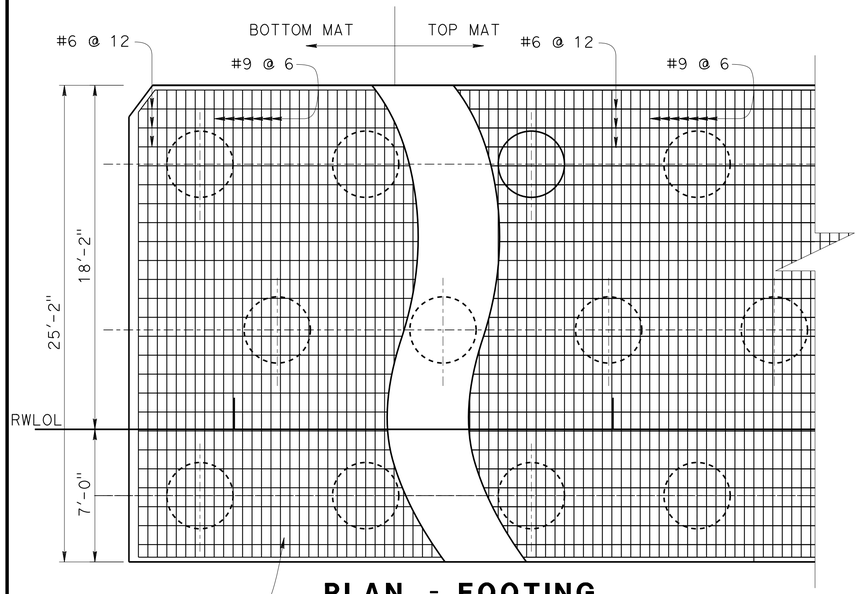

PLAN - FOOTING REINFORCEMENT

1/4" = 1'-0"

NOTE: For H = 22' only

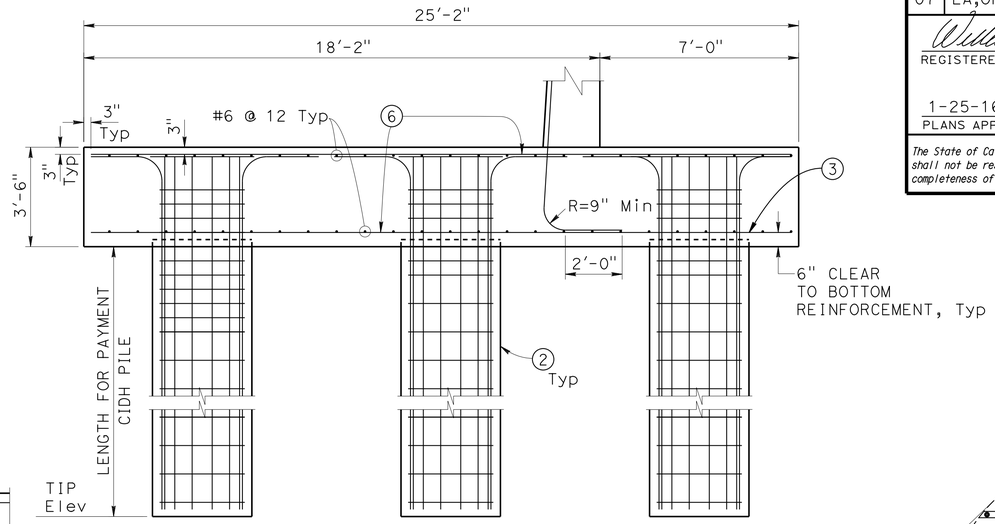

SECTION A-A

3/8" = 1'-0"

PILE DATA TABLE

WALL NO. LOCATION	PILE TYPE	NOMINAL RESISTANCE (kps)		DESIGN TIP ELEVATIONS, (ft)	SPECIFIED TIP ELEVATION, (ft)
		COMPRESION	TENSION		
VA104 LOL Sta 10+00 to 12+43	42-inch CIDH	470	0	+9.0 (a) +48.0 (c) (a)	+9

NOTES:
1. Design tip elevations are controlled by: (a) Compression, (b) Tension, (c) Settlement (d) Lateral
2. specificied tip elevation for driven piles shall not be raised above the design tip elevations for tension load and tolerable settlement.
3. The CIDH specified tip elevation shall not be raised.

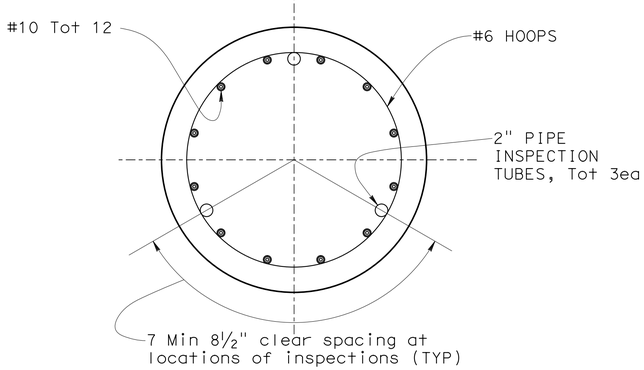

42" DIA CIDH PILE

1" = 1'-0"

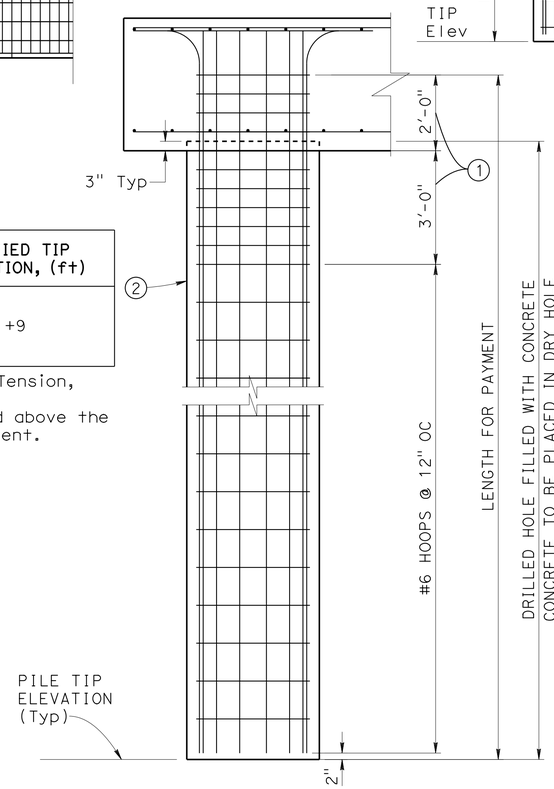

Typical 42" Dia Pile Elevation

SECTION B-B

1/2" = 1'-0"

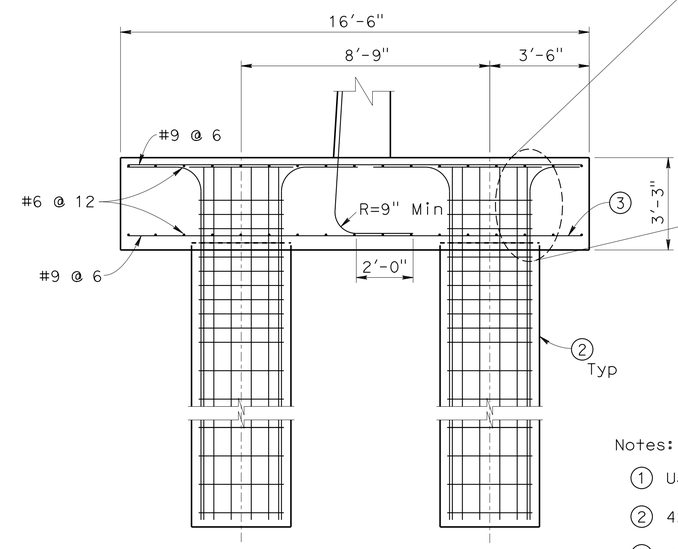

TYPICAL SECTION

3/8" = 1'-0"

FOR H=16', H=18', H=20'

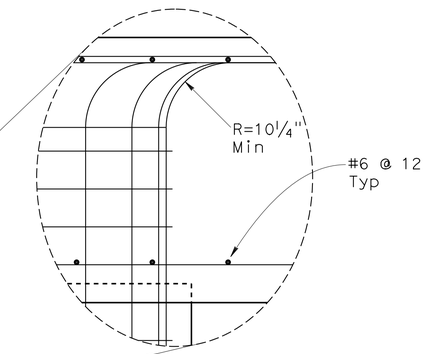

Notes:

1. Use #6 Hoops @ 6 OC
2. 42" Dia CIDH PILE
3. Bottom mat may be shifted to clear pile reinf See pile Layout for pile locations "PILE LAYOUT" sheet
4. Reinforcement shown shall be used in lieu of Standard Plan RSP B3-1A "RETAINING WALL TYPE 1 (CASE 1)" similar Reinf.
5. For stem reinf & Ftg, reinf is not shown see RSP B3-1A, case 1
6. See Footing Reinforcement Plan

DESIGN	BY Ruperd Wilson	CHECKED Cipriano Mananasala	
DETAILS	BY Jaime Ramirez	CHECKED Ruperd Wilson	
QUANTITIES	BY M. Thach	CHECKED J. Radu	

STATE OF CALIFORNIA
DEPARTMENT OF TRANSPORTATION

DIVISION OF ENGINEERING SERVICES
STRUCTURE DESIGN
DESIGN BRANCH 11

BRIDGE NO. 53E0267
POST MILE 1.22

RETAINING WALL VA104
PILE AND FOOTING DETAILS

STRUCTURES DESIGN DETAIL SHEET (ENGLISH) (REV. 09-01-10)

ORIGINAL SCALE IN INCHES FOR REDUCED PLANS 0 1 2 3

UNIT: 3587
PROJECT NUMBER & PHASE: 0715000160-1
CONTRACT NO.: 07-2159U4

DISREGARD PRINTS BEARING EARLIER REVISION DATES

REVISION DATES 6-27-13 7-24-13

SHEET 6 OF 9

FILE => 53e0267-e-piledt.dgn

USERNAME => s125624 DATE PLOTTED => 28-JAN-2016 TIME PLOTTED => 12:39

DIST	COUNTY	ROUTE	POST MILES TOTAL PROJECT	SHEET No.	TOTAL SHEETS
07	LA,Ora	5	0.0/1.5, 44.3/44.4	1602	1622

William Kemp 3-18-15
REGISTERED CIVIL ENGINEER DATE

1-25-16
PLANS APPROVAL DATE

REGISTERED PROFESSIONAL ENGINEER William D. Kemp No. 55730 Exp. 12/31/16 CIVIL STATE OF CALIFORNIA

The State of California or its officers or agents shall not be responsible for the accuracy or completeness of electronic copies of this plan sheet.

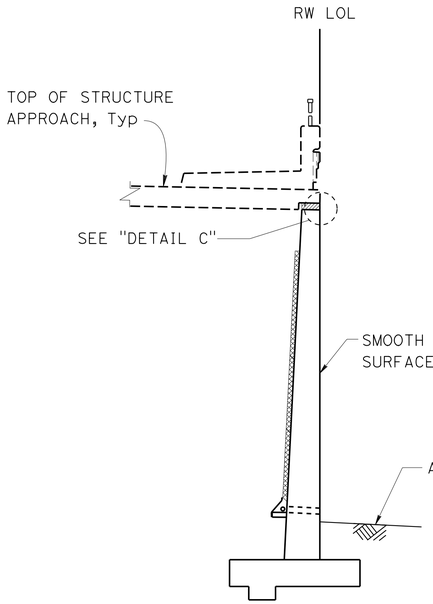

SECTION A-A
NO SCALE

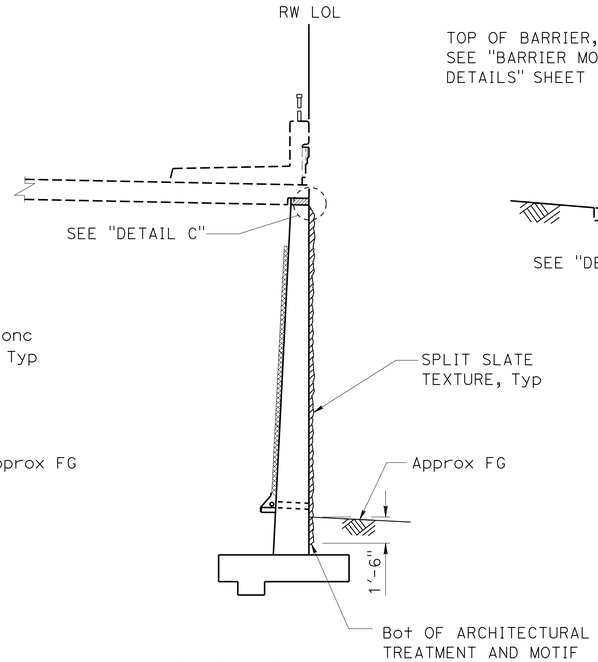

SECTION B-B
NO SCALE

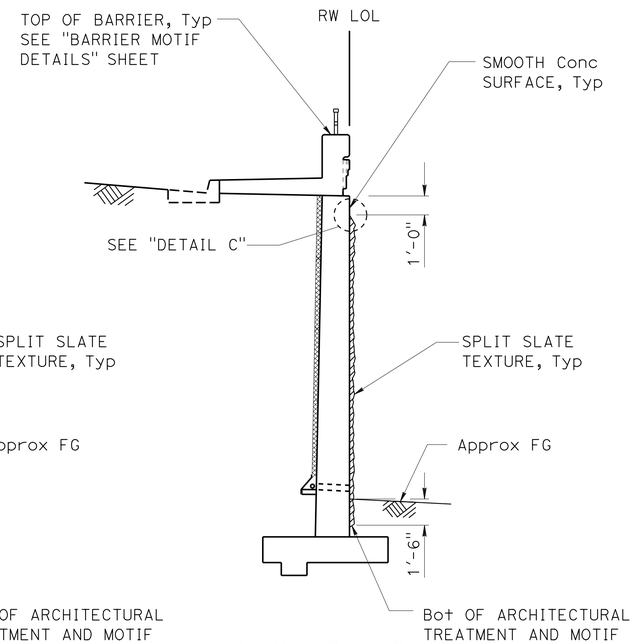

SECTION C-C
NO SCALE

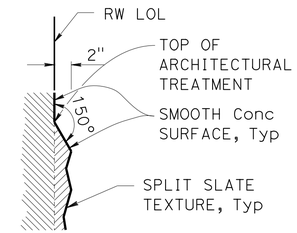

DETAIL C
NO SCALE

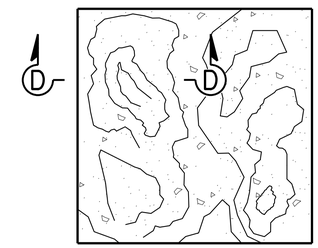

SPLIT SLATE TEXTURE
NO SCALE

SECTION D-D
NO SCALE

Note: All reference to Surface Dimensions of Wall details are from RWLOL, Typ

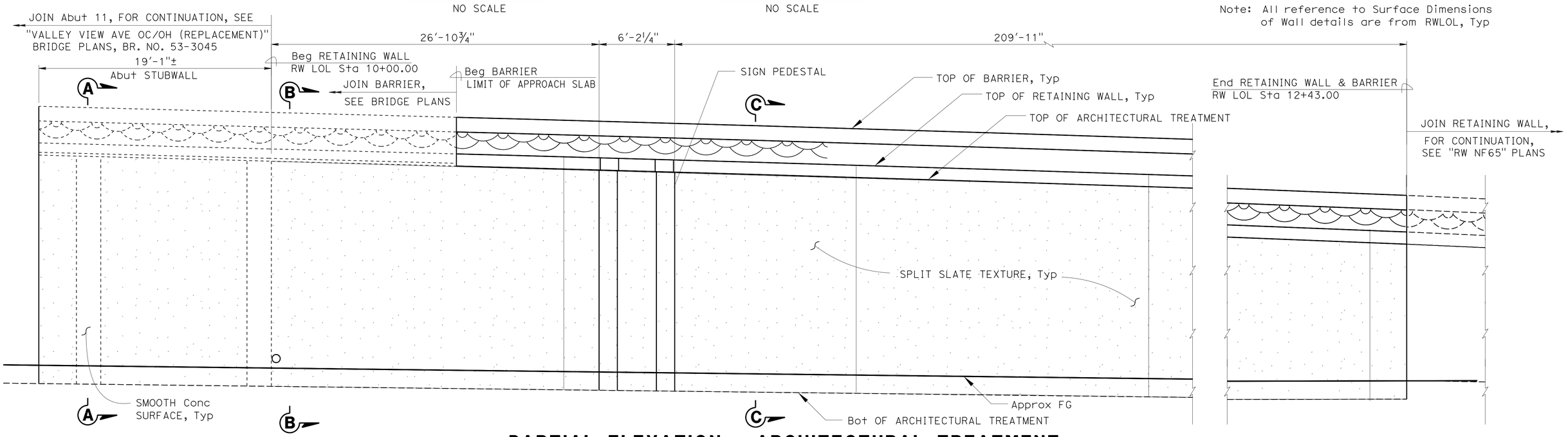

PARTIAL ELEVATION - ARCHITECTURAL TREATMENT
1/4" = 1'-0"

	BY	CHECKED
DESIGN	Ruperd Wilson	Cipriano Mananasala
DETAILS	Jaime Ramirez	Ruperd Wilson
QUANTITIES	M. Thach	J. Radu

STATE OF CALIFORNIA
DEPARTMENT OF TRANSPORTATION

DIVISION OF ENGINEERING SERVICES
STRUCTURE DESIGN
DESIGN BRANCH 11

BRIDGE NO. 53E0267
POST MILE 1.22

RETAINING WALL VA104
ARCHITECTURAL TREATMENT DETAILS

STRUCTURES DESIGN DETAIL SHEET (ENGLISH) (REV. 09-01-10)

ORIGINAL SCALE IN INCHES FOR REDUCED PLANS 0 1 2 3

UNIT: 3587
PROJECT NUMBER & PHASE: 0715000160-1
CONTRACT NO.: 07-2159u4

DISREGARD PRINTS BEARING EARLIER REVISION DATES

REVISION DATES: 7-12-12 7-24-13 4-28-13 6-10-13

SHEET 7 OF 9

FILE => 53e0267-f-arch1.dgn

USERNAME => s125624 DATE PLOTTED => 28-JAN-2016 TIME PLOTTED => 12:39

DIST	COUNTY	ROUTE	POST MILES TOTAL PROJECT	SHEET No.	TOTAL SHEETS
07	LA,Ora	5	0.0/1.5, 44.3/44.4	1603	1622

REGISTERED CIVIL ENGINEER — DATE 3-18-15

1-25-16
PLANS APPROVAL DATE

REGISTERED PROFESSIONAL ENGINEER — WILLIAM D. KEMP — No. 55730 — Exp. 12/31/16 — CIVIL — STATE OF CALIFORNIA

The State of California or its officers or agents shall not be responsible for the accuracy or completeness of electronic copies of this plan sheet.

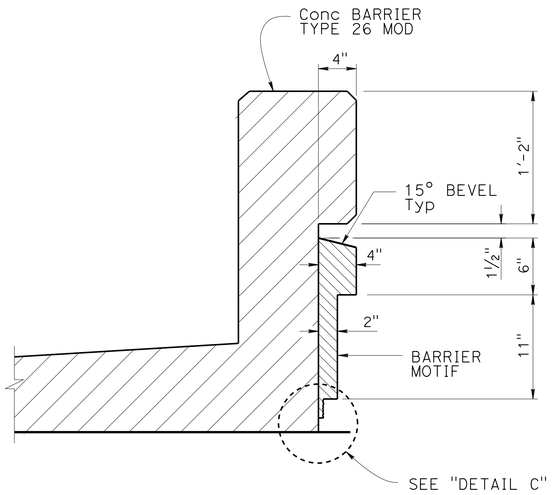

SECTION A-A

1½" = 1'-0"

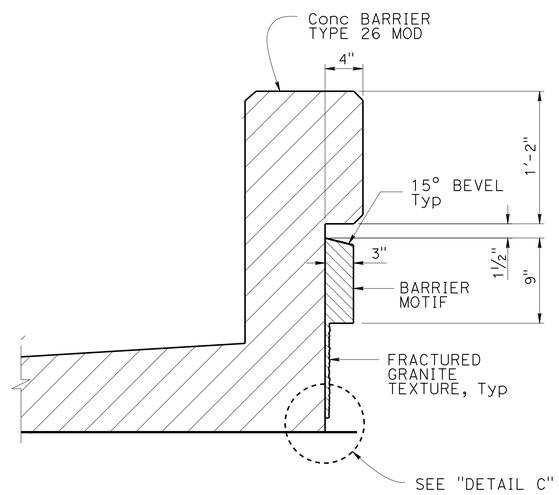

SECTION B-B

1½" = 1'-0"

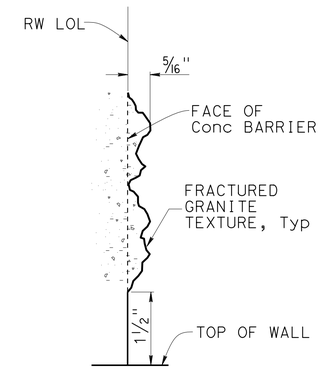

DETAIL C

NO SCALE

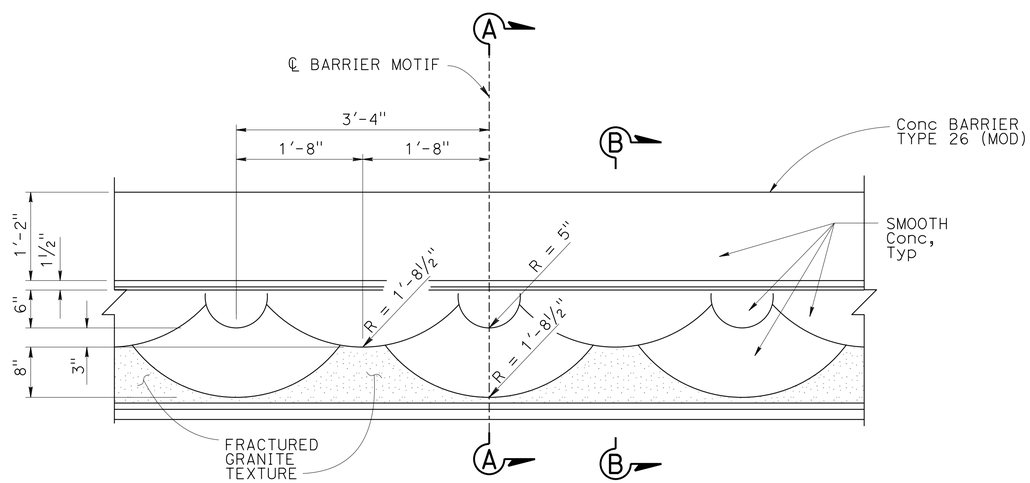

PARTIAL ELEVATION - BARRIER MOTIF

1" = 1'-0"

DESIGN	BY I. Tasabia	CHECKED H. J. Chavez	
DETAILS	BY Herman Mauroschadt	CHECKED H. J. Chavez	
QUANTITIES	BY M. Thach	CHECKED J. Radu	

STATE OF CALIFORNIA
DEPARTMENT OF TRANSPORTATION

DIVISION OF ENGINEERING SERVICES
STRUCTURE DESIGN
DESIGN BRANCH 11

BRIDGE NO. 53E0267
POST MILE 1.22

RETAINING WALL No. VA104
BARRIER MOTIF DETAILS

STRUCTURES DESIGN DETAIL SHEET (ENGLISH) (REV. 09-01-10)

ORIGINAL SCALE IN INCHES FOR REDUCED PLANS 0 1 2 3

UNIT: 3587
PROJECT NUMBER & PHASE: 0715000160-1
CONTRACT NO.: 07-2159U4

DISREGARD PRINTS BEARING EARLIER REVISION DATES

REVISION DATES: 6-5-12 3-15-13 4-25-13

SHEET 8 OF 9

FILE => 53e0267-g-arch2.dgn

USERNAME => s129624 DATE PLOTTED => 28-JAN-2016 TIME PLOTTED => 12:39

DIST	COUNTY	ROUTE	POST MILES TOTAL PROJECT	SHEET No.	TOTAL SHEETS
07	LA,Ora	5	0.0/1.5, 44.3/44.4	1604	1622

REGISTERED CIVIL ENGINEER 05/20/15 DATE

1-25-16
PLANS APPROVAL DATE

REGISTERED PROFESSIONAL ENGINEER MICHAEL G. SMITH No. 2229 Exp. 03/31/16 GEOTECHNICAL STATE OF CALIFORNIA

URS CORPORATION
2020 EAST FIRST STREET, SUITE 400
SANTA ANA, CA 92705

The State of California or its officers or agents shall not be responsible for the accuracy or completeness of electronic copies of this plan sheet.

1-This LOTB sheet was prepared in accordance with the Caltrans Soil & Rock Logging, Classification, & Presentation Manual (2010 Edition).

2-For protection of underground utility lines, hand-auger was used to remove top 5 to 10 feet of subsurface material for exploratory borings and Cone Penetration Testings.

3-2.5" to 1.4" blow counts conversion factors for fine-grain and coarse-grain soils have been 0.8 and 0.55, respectively.

BENCH MARK

GPS 0887
ELEVATION 65.915 FT
FD 2-1/2 CADT DISK IN CONC. CURB
FLUSH, STAMPED "LA-5-1.0, 1995"
LOCATED 90' N OF THE SOUTH SIDE
FIRESTONE BLVD 0.2 MI SE OF VALLEY VIEW
NORTHING 542395.636
EASTING 1997613.893
DATUM NAVD88

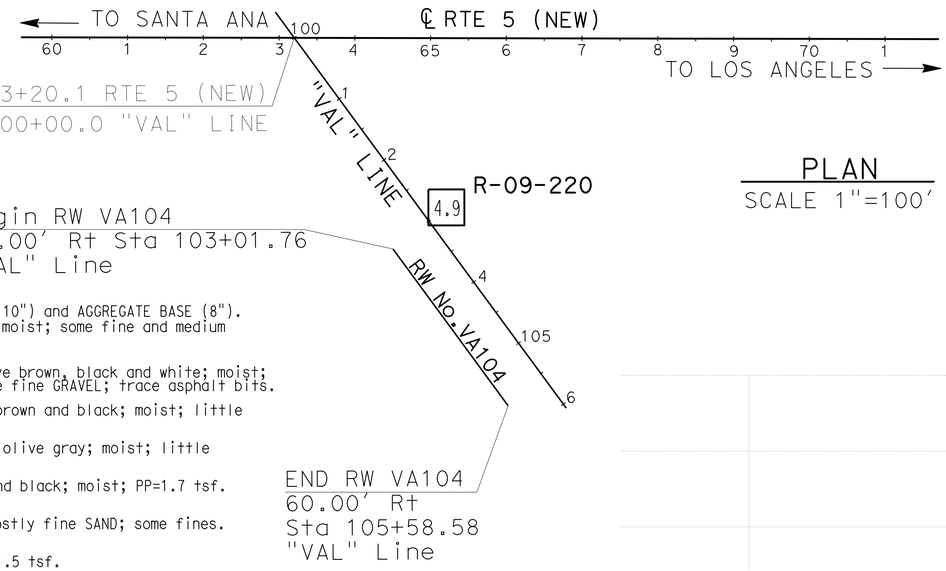

PLAN

SCALE 1"=100'

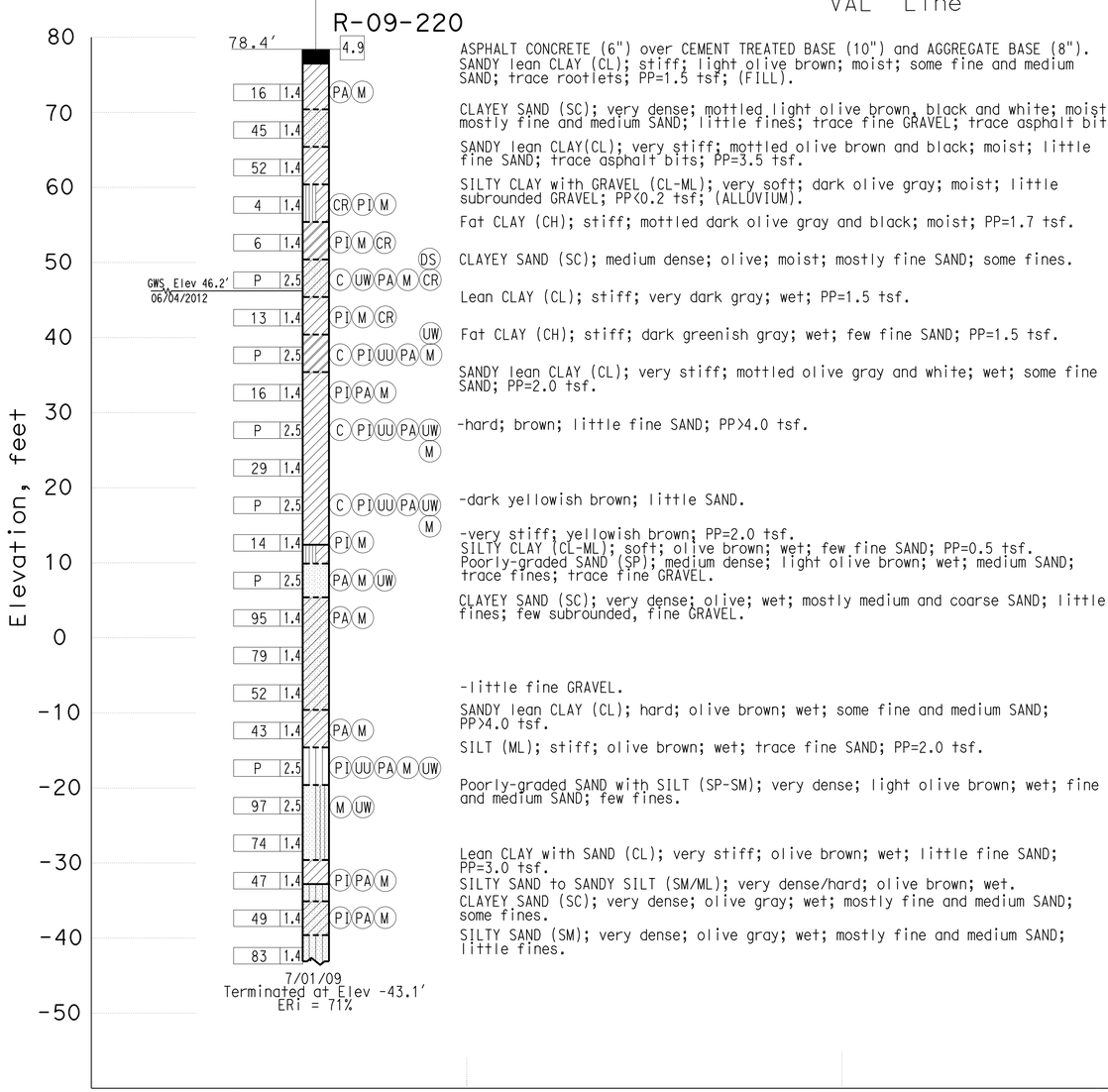

PROFILE VIEW

VERTICAL SCALE 1"=10'
HORIZONTAL SCALE 1"=20'

F.MOTAMED DESIGN OVERSIGHT 05/20/15 SIGN OFF DATE	DRAWN BY	T.PANAH	EJ.JEON FIELD INVESTIGATION BY: DATE: 07/01/09
	CHECKED BY	A.GHAZINOOR/L.KHALKHALI	

PREPARED FOR THE STATE OF CALIFORNIA DEPARTMENT OF TRANSPORTATION

M.G. SMITH
PROJECT ENGINEER

BRIDGE NO. 53E0267
POST MILES 1.22

RETAINING WALL NO. VA104
LOG OF TEST BORINGS SHEET 1 OF 1

GS CIVIL LOG OF TEST BORINGS SHEET (ENGLISH) (REV. 03/14/12)

ORIGINAL SCALE IN INCHES FOR REDUCED PLANS 0 1 2 3

UNIT: 3658
PROJECT NUMBER & PHASE: 07150001601 CONTRACT NO.: 07-2159U4

DISREGARD PRINTS BEARING EARLIER REVISION DATES

REVISION DATES 5/12/15 SHEET 9 OF 9

FILE => 53e0267-h-lotb.dgn

USERNAME => s125624 DATE PLOTTED => 28-JAN-2016 TIME PLOTTED => 12:33

DIST	COUNTY	ROUTE	POST MILES TOTAL PROJECT	SHEET No.	TOTAL SHEETS
07	LA,Ora	5	0.0/1.5, 44.3/44.4	1605	1622

REGISTERED CIVIL ENGINEER — DATE 3-18-15

1-25-16
PLANS APPROVAL DATE

REGISTERED PROFESSIONAL ENGINEER — William D. Kemp — No. 55730 — Exp. 12-31-16 — CIVIL — STATE OF CALIFORNIA

The State of California or its officers or agents shall not be responsible for the accuracy or completeness of electronic copies of this plan sheet.

QUANTITIES

STRUCTURE EXCAVATION (RETAINING WALL)	265	CY
STRUCTURE BACKFILL (RETAINING WALL)	228	CY
STRUCTURAL CONCRETE, RETAINING WALL	41	CY
ARCHITECTURAL TREATMENT (SPLIT SLATE)	340	SQFT
BAR REINFORCING STEEL (RETAINING WALL)	5,340	LB
TUBULAR HANDRAILING (MODIFIED)	49	LF
CONCRETE BARRIER (TYPE 26 MODIFIED)	49	LF

STANDARD PLANS 2010

	A10A	ABBREVIATIONS (SHEET 1 OF 2)
RSP	A10B	ABBREVIATIONS (SHEET 2 OF 2)
	A10C	LINES AND SYMBOLS (SHEET 1 OF 3)
	A10D	LINES AND SYMBOLS (SHEET 2 OF 3)
	A10E	LINES AND SYMBOLS (SHEET 3 OF 3)
RSP	A10F	LEGEND - SOIL (SHEET 1 OF 2)
RSP	A10G	LEGEND - SOIL (SHEET 2 OF 2)
	A10H	LEGEND - ROCK
	A62B	LIMITS OF PAYMENT FOR EXCAVATION AND BACKFILL- BRIDGE SURCHARGE AND WALL
	B0-3	BRIDGE DETAILS
RSP	B3-1A	RETAINING WALL TYPE 1 (CASE 1)
RSP	B3-5	RETAINING WALL DETAILS NO. 1
	B11-51	TUBULAR HAND RAILING
RSP	B11-54	CONCRETE BARRIER TYPE 26

INDEX TO PLANS

SHEET NO.	TITLE
1	GENERAL PLAN
2	RETAINING WALL DETAILS
3	SIGN PEDESTAL DETAILS
4	ARCHITECTURAL TREATMENT DETAILS
5	LIMITS OF EXCAVATION AND BACKFILL
6	LOG OF TEST BORINGS SHEET 1 OF 1

STANDARD PLAN SHEET NO.

DETAIL No.

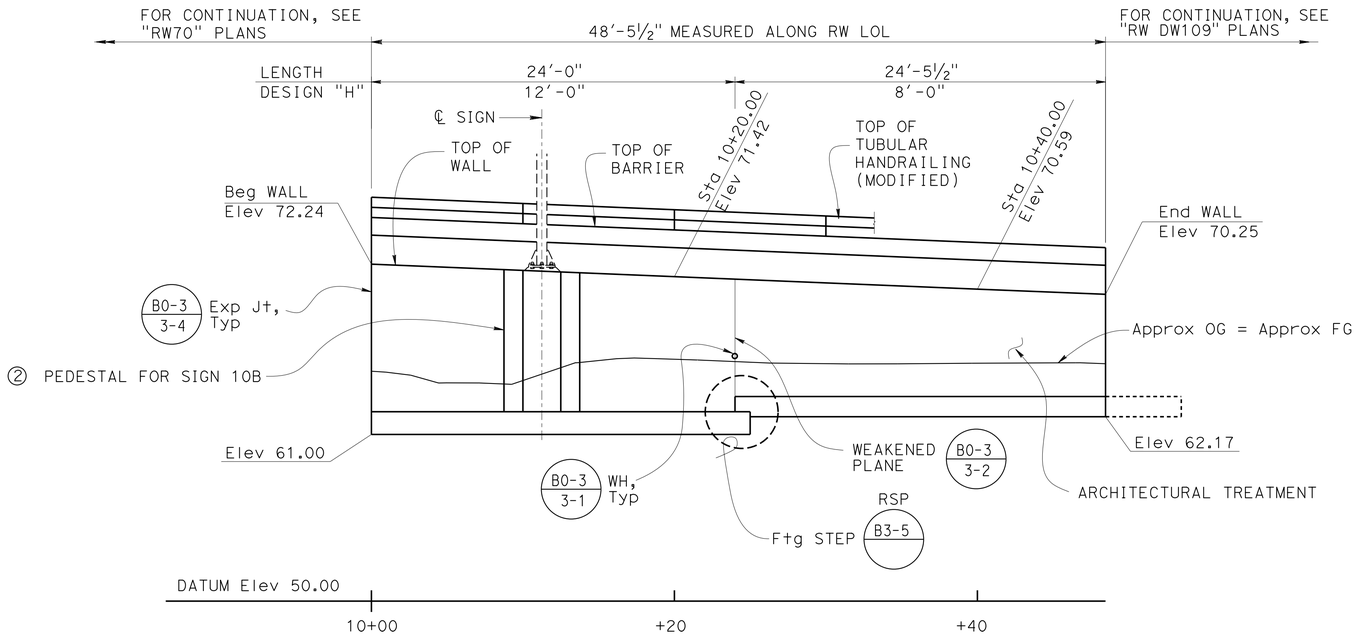

MIRRORED ELEVATION

1" = 5'-0"

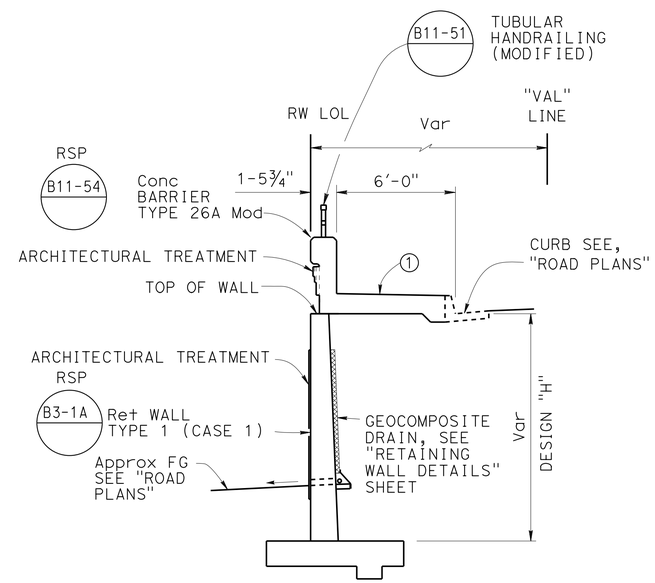

TYPICAL SECTION

NO SCALE

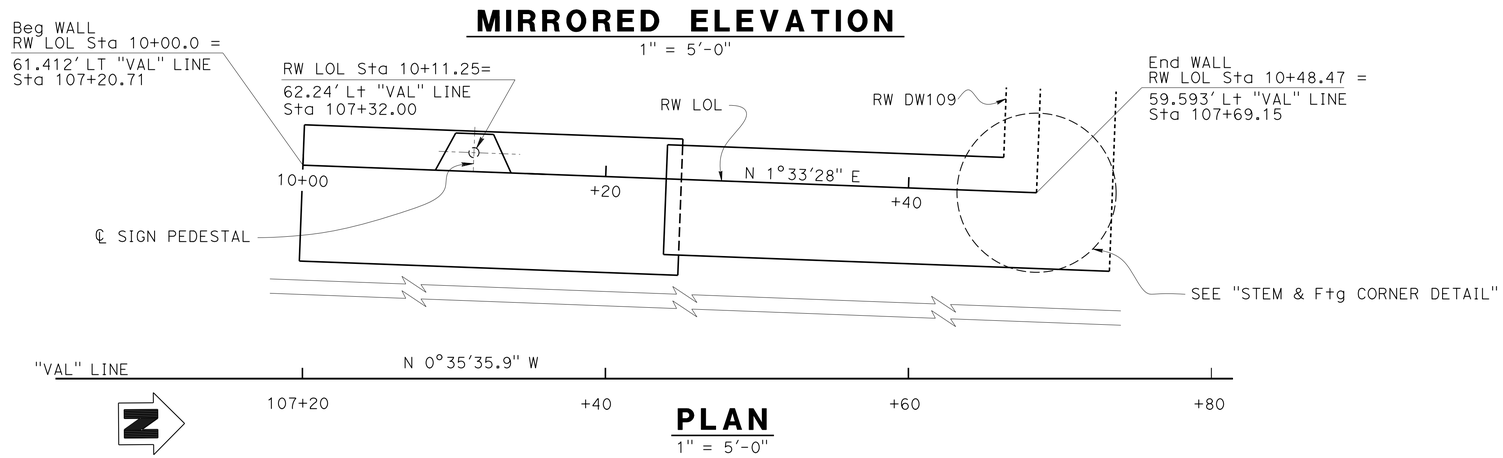

PLAN

1" = 5'-0"

NOTE:

① Transition to Depressed Sidewalk between Sta 10+41.95 and Sta 10+48.47, see "ROAD PLANS"

② For location of Sign, see "ROAD PLANS"

Ramin Rashedi 3-18-15
DESIGN ENGINEER

	BY	CHECKED
DESIGN	Yeo Yoon	Cipriano Manansala
DETAILS	Anthony Valdez	Cipriano Manansala
QUANTITIES	G. Reyes-Gutierrez	Kamal Chonkria

LOAD & RESISTANCE FACTOR DESIGN — LIVE LOADING: HL93 W/"LOW-BOY"; PERMIT DESIGN VEHICLE

	BY	CHECKED
LAYOUT	Yeo Yoon	Cipriano Manansala
SPECIFICATIONS	Xiahong Li	PLANS AND SPECS COMPARED Xiahong Li

ORIGINAL SCALE IN INCHES FOR REDUCED PLANS 0 1 2 3

STATE OF CALIFORNIA
DEPARTMENT OF TRANSPORTATION

DIVISION OF ENGINEERING SERVICES
STRUCTURE DESIGN
DESIGN BRANCH 11

BRIDGE NO. RW VA107
POST MILE 1.29

RETAINING WALL VA107
GENERAL PLAN

UNIT: 3587
PROJECT NUMBER & PHASE: 0715000160-1
CONTRACT NO.: 07-2159u4

DISREGARD PRINTS BEARING EARLIER REVISION DATES

REVISION DATES: 10-18-11 3-28-13 6-5-13 6-10-13

SHEET 1 OF 6

DIST	COUNTY	ROUTE	POST MILES TOTAL PROJECT	SHEET No.	TOTAL SHEETS
07	LA,Ora	5	0.0/1.5, 44.3/44.4	1606	1622

REGISTERED CIVIL ENGINEER — DATE 3-18-15

1-25-16
PLANS APPROVAL DATE

REGISTERED PROFESSIONAL ENGINEER — William D. Kemp — No. 55730 — Exp. 12-31-16 — CIVIL — STATE OF CALIFORNIA

The State of California or its officers or agents shall not be responsible for the accuracy or completeness of electronic copies of this plan sheet.

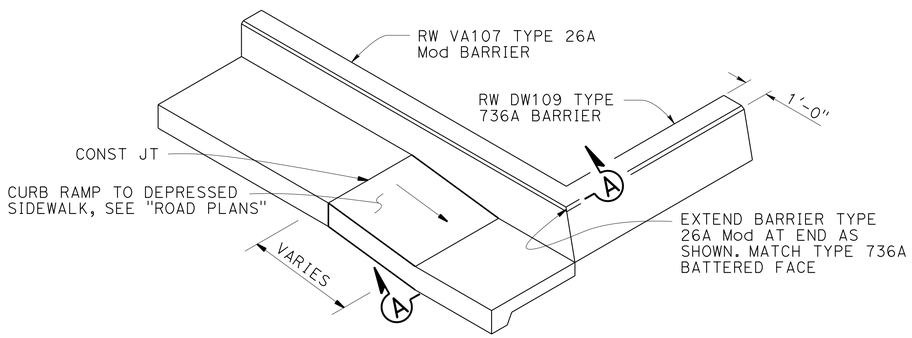

NOTE:
ARCHITECTURAL TREATMENT NOT SHOWN

BARRIER TRANSITION DETAIL

NO SCALE

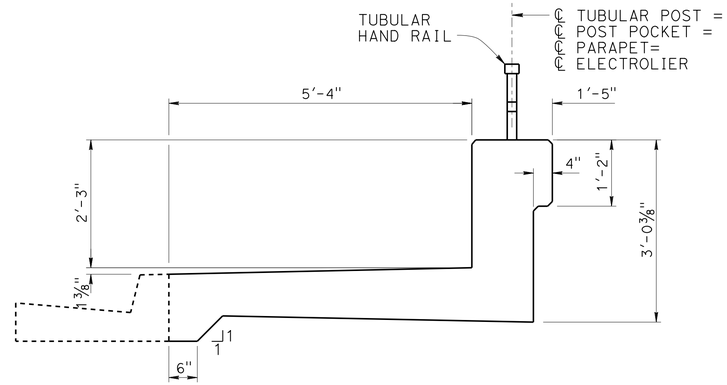

CONCRETE BARRIER TYPE 26A MOD

3/4" = 1'-0"

RSP

Note: For details not shown see B11-54

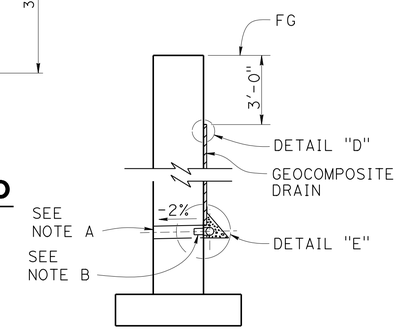

WALL SECTION

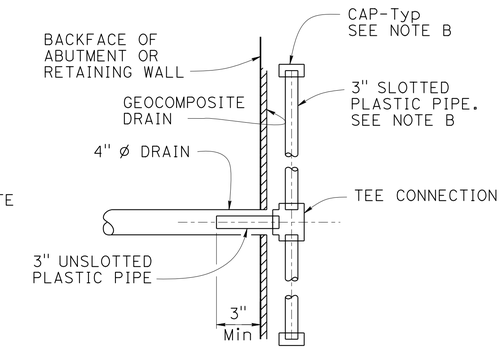

SECTION K-K

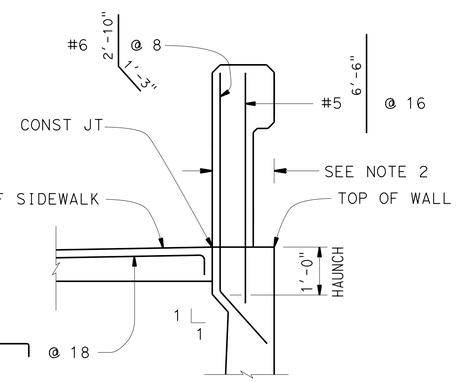

NOTES:
1. APPLY DETAIL FROM THE BEGINNING OF CURB RAMP CONSTRUCTION JOINT TO THE END OF RETAINING WALL CORNER
2. HAUNCH WIDTH MUST MATCH BARRIER RAIL WIDTH

SECTION A-A

NO SCALE

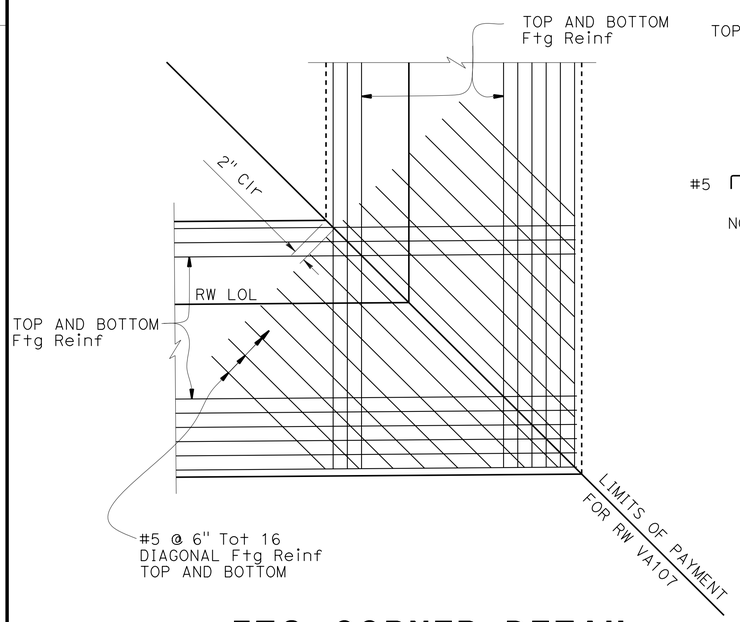

FTG CORNER DETAIL

No Scale

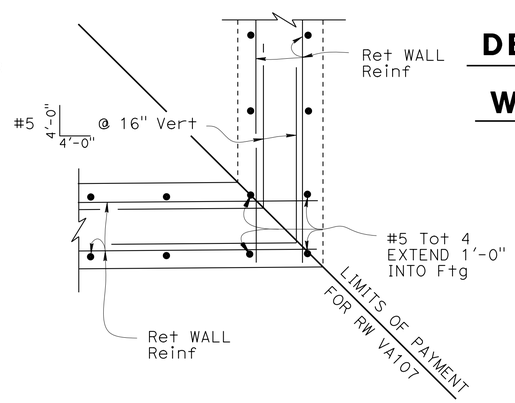

STEM CORNER DETAIL

NO SCALE

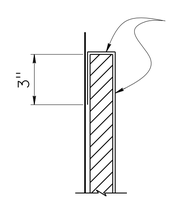

DETAIL "D"

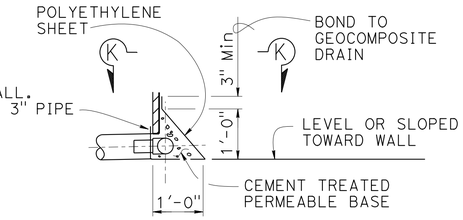

DETAIL "E"

WEEP HOLE AND GEOCOMPOSITE DRAIN

NO SCALE

NOTES:

A. 4" Ø drains at intermediate sag points and at 25'-0" center to center (9'-0" c-c for Type 3 and 9'-2" c-c for Type 4 retaining walls). For walls adjacent to sidewalks or curbs, provide 4" Ø cast iron or asbestos cement pipe under the sidewalk to discharge through curb face. Exposed wall drains shall be located 3" ± above finished grade.

B. Geocomposite drain, cement treated permeable base, and 3" Ø slotted plastic pipe continuous behind retaining wall or abutment. Cap ends of pipe. Provide "Tee" connection at each 4" Ø drain.

C. Connect the low end of plastic pipe to the main outlet pipe as applicable.

	BY	CHECKED
DESIGN	Yeo Yoon	Cipriano Manansala
DETAILS	Anthony Valdez	Cipriano Manansala
QUANTITIES	G. Reyes-Gutierrez	Kamal Chonkria

STATE OF CALIFORNIA
DEPARTMENT OF TRANSPORTATION

DIVISION OF ENGINEERING SERVICES
STRUCTURE DESIGN
DESIGN BRANCH 11

BRIDGE NO. RW VA107
POST MILE 1.29

RETAINING WALL VA107
RETAINING WALL DETAILS

STRUCTURES DESIGN DETAIL SHEET (ENGLISH) (REV. 09-01-10)

ORIGINAL SCALE IN INCHES FOR REDUCED PLANS 0 1 2 3

UNIT: 3587
PROJECT NUMBER & PHASE: 0715000160-1
CONTRACT NO.: 07-2159u4

DISREGARD PRINTS BEARING EARLIER REVISION DATES

REVISION DATES: 8-28-13 5-28-13 6-10-13 3-28-15

SHEET 2 OF 6

FILE => rwva107-c-retdt.dgn

USERNAME => s125624 DATE PLOTTED => 28-JAN-2016 TIME PLOTTED => 12:39

DIST	COUNTY	ROUTE	POST MILES TOTAL PROJECT	SHEET No.	TOTAL SHEETS
07	LA,Ora	5	0.0/1.5, 44.3/44.4	1607	1622

William Kemp 3-18-15
REGISTERED CIVIL ENGINEER DATE

1-25-16
PLANS APPROVAL DATE

REGISTERED PROFESSIONAL ENGINEER
William D. Kemp
No. 55730
Exp. 12-31-16
CIVIL
STATE OF CALIFORNIA

The State of California or its officers or agents shall not be responsible for the accuracy or completeness of electronic copies of this plan sheet.

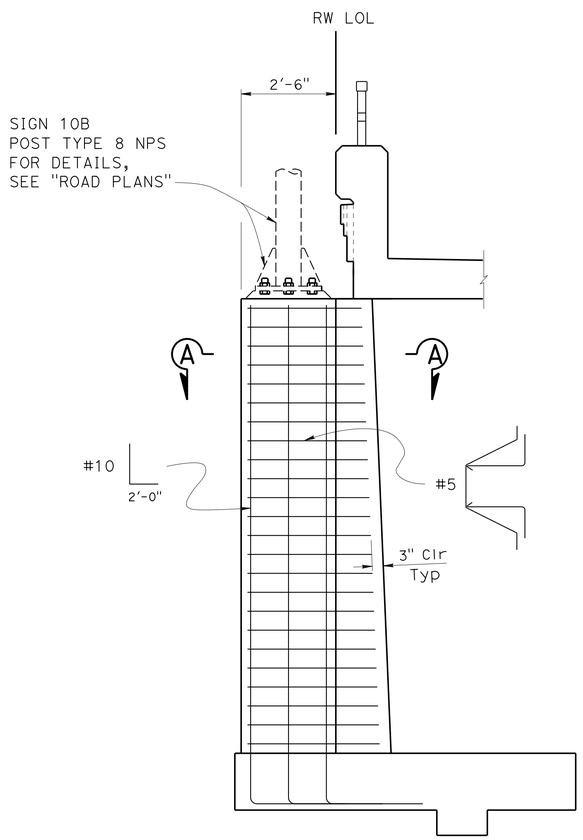

ELEVATION
NO SCALE

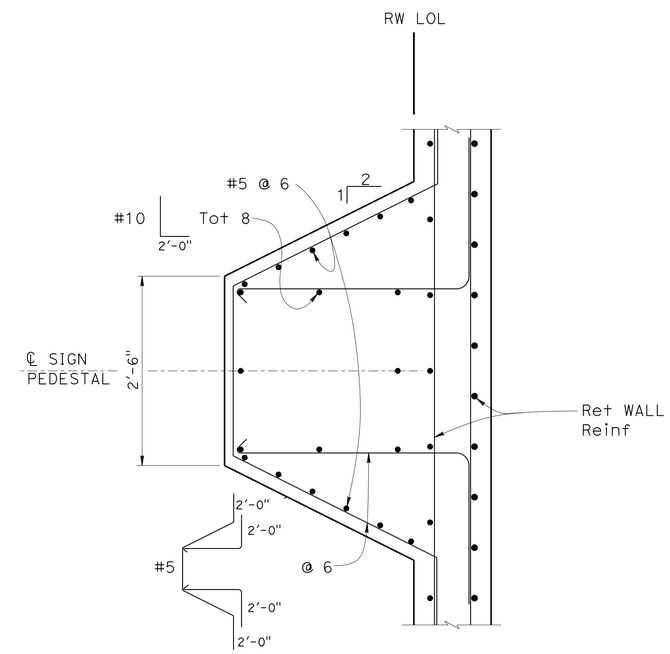

SECTION A-A
NO SCALE

Notes:

1. Reinf shown is in addition to "RETAINING WALL TYPE 1 (CASE 1)" plan unless otherwise specified. Not all retaining wall and Barrier Reinf shown
2. Vertical reinforcement on pedestal can be adjusted to clear Retaining Wall Reinf
3. Conc for Pedestal shall be poured simultaneously with Retaining Wall Conc. There shall be no construction Joint between Pedestal and Retaining Wall.

	BY	CHECKED
DESIGN	Yeo Yoon	Cipriano Manansala
DETAILS	Pauline Tong	Cipriano Manansala
QUANTITIES	G. Reyes-Gutierrez	Kamal Chankria

STATE OF CALIFORNIA
DEPARTMENT OF TRANSPORTATION

DIVISION OF ENGINEERING SERVICES
STRUCTURE DESIGN
DESIGN BRANCH 11

BRIDGE NO. RW VA107
POST MILE 1.29

RETAINING WALL VA107
SIGN PEDESTAL DETAILS

STRUCTURES DESIGN DETAIL SHEET (ENGLISH) (REV. 09-01-10)

ORIGINAL SCALE IN INCHES FOR REDUCED PLANS 0 1 2 3

UNIT: 3587
PROJECT NUMBER & PHASE: 0715000160-1
CONTRACT NO.: 07-2159U4

DISREGARD PRINTS BEARING EARLIER REVISION DATES

REVISION DATES: ~~12-13-11~~ ~~6-10-13~~ 6-11-13

SHEET 3 OF 6

FILE => rwva107-d-sign.dgn

USERNAME => s125624 DATE PLOTTED => 28-JAN-2016 TIME PLOTTED => 12:39

DIST	COUNTY	ROUTE	POST MILES TOTAL PROJECT	SHEET No.	TOTAL SHEETS
07	LA,Ora	5	0.0/1.5, 44.3/44.4	1608	1622

REGISTERED CIVIL ENGINEER — DATE: 3-18-15

1-25-16
PLANS APPROVAL DATE

REGISTERED PROFESSIONAL ENGINEER — William D. Kemp — No. 55730 — Exp. 12-31-16 — CIVIL — STATE OF CALIFORNIA

The State of California or its officers or agents shall not be responsible for the accuracy or completeness of electronic copies of this plan sheet.

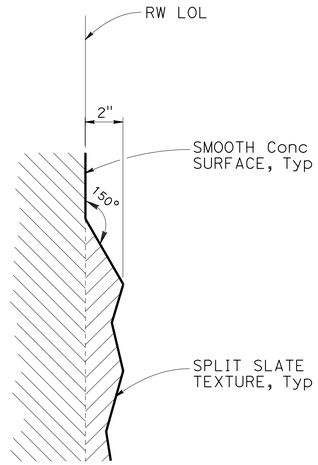

DETAIL A
NO SCALE

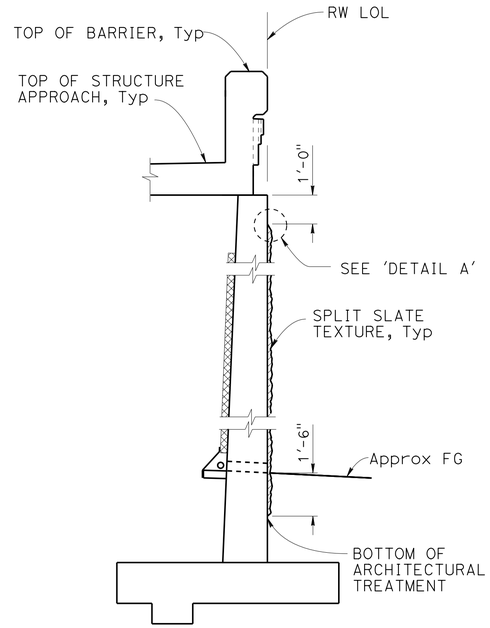

SECTION B-B
NO SCALE

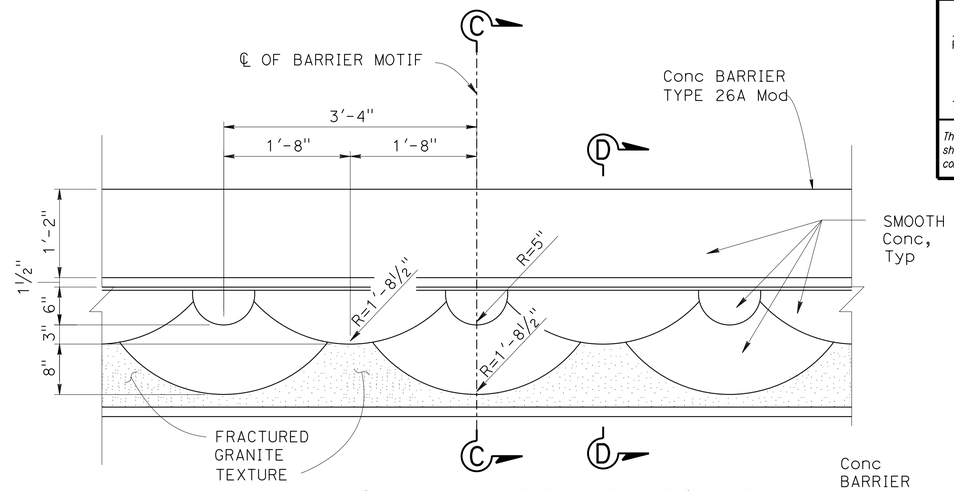

ELEVATION - BARRIER MOTIF
NO SCALE

Note:

All Surface Relief and Texture shall be measured from RWLOL, Typical.

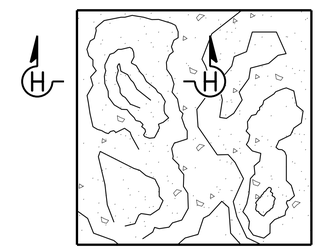

SPLIT SLATE TEXTURE
NO SCALE

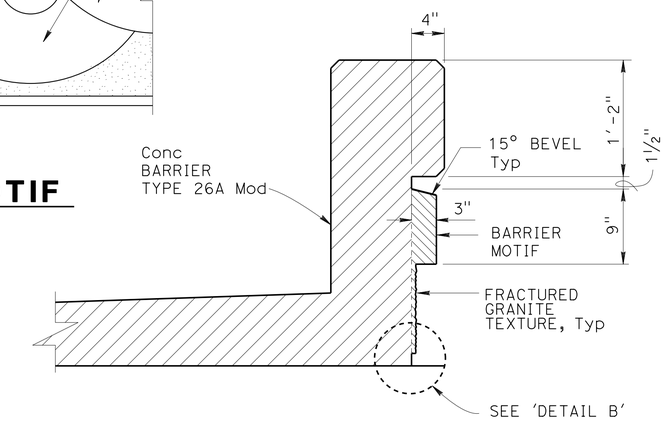

SECTION D-D
NO SCALE

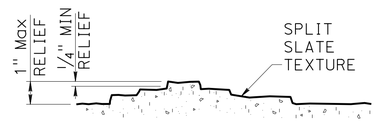

SECTION H-H
NO SCALE

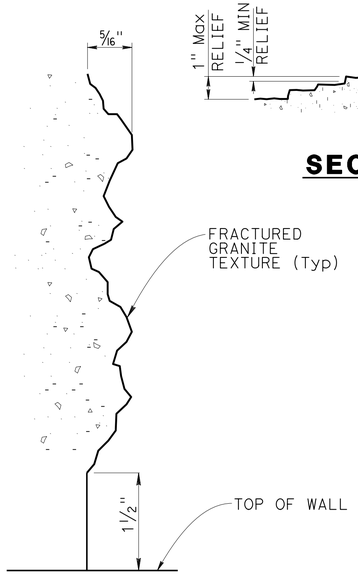

DETAIL B
No Scale

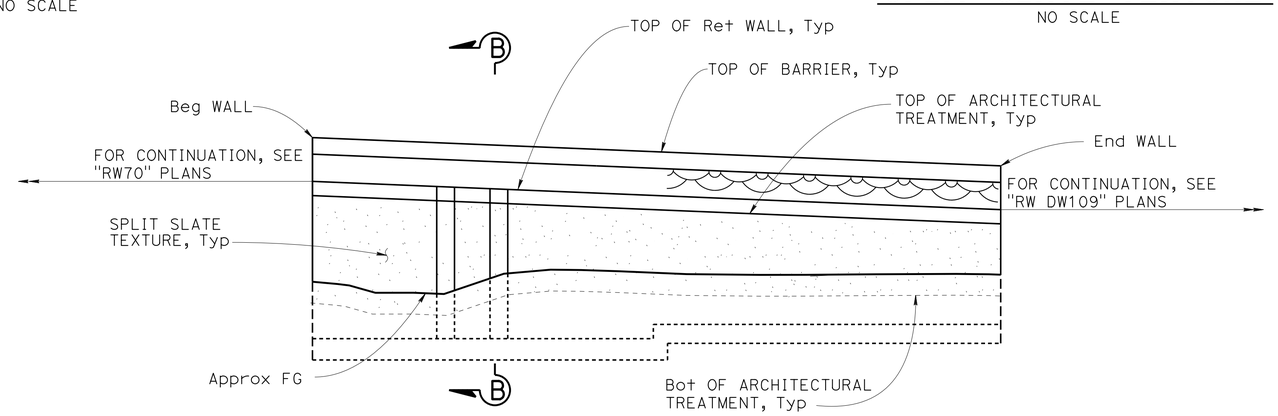

MIRRORED ARCHITECTURAL TREATMENT
NO SCALE

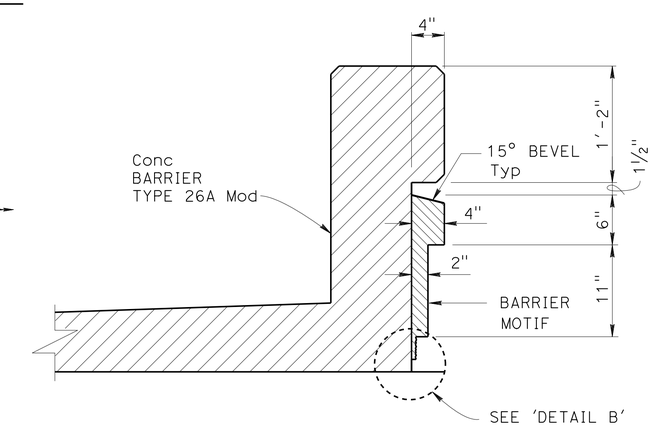

SECTION C-C
NO SCALE

DESIGN	BY H. Javier Chavez	CHECKED Issac Tasabia	
DETAILS	BY Jaime Ramirez	CHECKED Issac Tasabia	
QUANTITIES	BY G. Reyes-Gutierrez	CHECKED Kamal Chonkria	

STATE OF CALIFORNIA
DEPARTMENT OF TRANSPORTATION

DIVISION OF ENGINEERING SERVICES
STRUCTURE DESIGN
DESIGN BRANCH 11

BRIDGE NO. RW VA107
POST MILE 1.29

RETAINING WALL VA107
ARCHITECTURAL TREATMENT DETAILS

STRUCTURES DESIGN DETAIL SHEET (ENGLISH) (REV. 09-01-10)

ORIGINAL SCALE IN INCHES FOR REDUCED PLANS 0 1 2 3

UNIT: 3587
PROJECT NUMBER & PHASE: 0715000160-1
CONTRACT NO.: 07-2159U4

DISREGARD PRINTS BEARING EARLIER REVISION DATES

REVISION DATES: 4-26-12 1-23-13 3-21-13

SHEET 4 OF 6

FILE => rwva107-e-arch.dgn

USERNAME => s125624 DATE PLOTTED => 28-JAN-2016 TIME PLOTTED => 12:39

DIST	COUNTY	ROUTE	POST MILES TOTAL PROJECT	SHEET No.	TOTAL SHEETS
07	LA,Ora	5	0.0/1.5, 44.3/44.4	1609	1622

William Kemp 3-18-15
REGISTERED CIVIL ENGINEER DATE

1-25-16
PLANS APPROVAL DATE

REGISTERED PROFESSIONAL ENGINEER
William D. Kemp
No. 55730
Exp. 12/31/16
CIVIL
STATE OF CALIFORNIA

The State of California or its officers or agents shall not be responsible for the accuracy or completeness of electronic copies of this plan sheet.

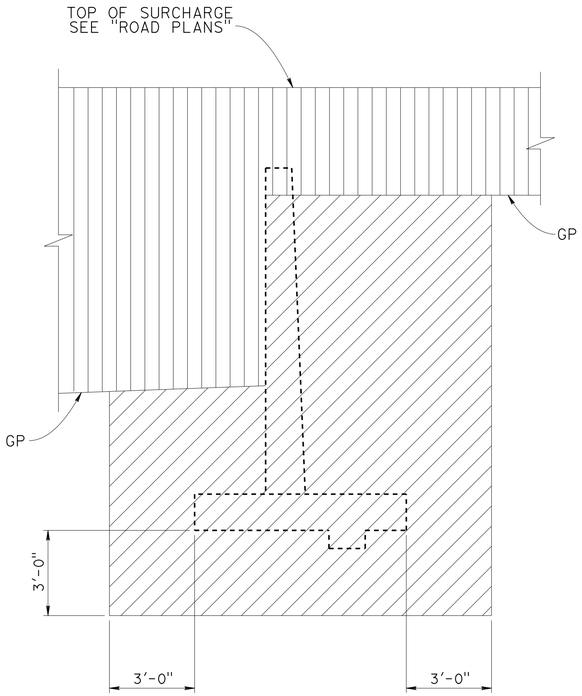

EXCAVATION

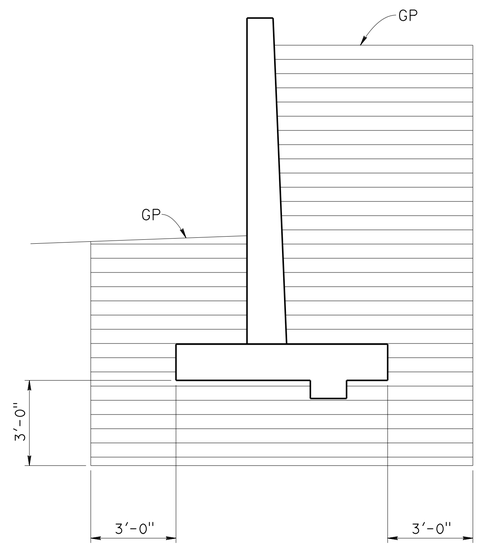

BACKFILL

LEGEND:

- STRUCTURE EXCAVATION
- ROADWAY EXCAVATION
- STRUCTURE BACKFILL

GP - PLANNED GRADING PLANE

LIMITS OF EXCAVATION AND BACKFILL

NO SCALE

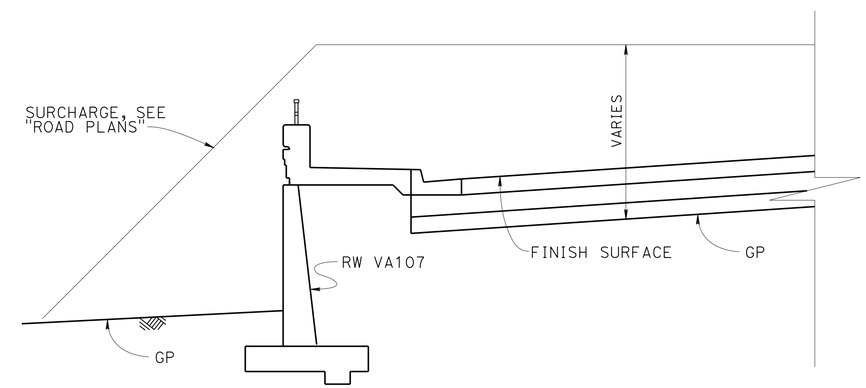

EMBANKMENT SURCHARGE

NO SCALE

DESIGN	BY Yeo Yoon	CHECKED Cipriano Manansala	
DETAILS	BY Jaime Ramirez	CHECKED Cipriano Manansala	
QUANTITIES	BY G. Reyes-Gutierrez	CHECKED Kamal Chonkria	

STATE OF CALIFORNIA
DEPARTMENT OF TRANSPORTATION

DIVISION OF ENGINEERING SERVICES
STRUCTURE DESIGN
DESIGN BRANCH 11

BRIDGE NO. RW VA107
POST MILE 1.29

RETAINING WALL VA107
LIMITS OF EXCAVATION AND BACKFILL

STRUCTURES DESIGN DETAIL SHEET (ENGLISH) (REV. 09-01-10)

ORIGINAL SCALE IN INCHES FOR REDUCED PLANS 0 1 2 3

UNIT: 3587
PROJECT NUMBER & PHASE: 0715000160-1
CONTRACT NO.: 07-2159U4

DISREGARD PRINTS BEARING EARLIER REVISION DATES

REVISION DATES: 6-28-13 5-20-13

SHEET 5 OF 6

FILE => rwva107-f-exc.dgn

USERNAME => s125624 DATE PLOTTED => 28-JAN-2016 TIME PLOTTED => 12:39

DIST	COUNTY	ROUTE	POST MILES TOTAL PROJECT	SHEET No.	TOTAL SHEETS
07	LA,Ora	5	0.0/1.5, 44.3/44.4	1610	1622

REGISTERED CIVIL ENGINEER 05/20/15 DATE

1-25-16
PLANS APPROVAL DATE

REGISTERED PROFESSIONAL ENGINEER MICHAEL G. SMITH No. 2229 Exp. 03/31/16 GEOTECHNICAL STATE OF CALIFORNIA

URS CORPORATION
2020 EAST FIRST STREET, SUITE 400
SANTA ANA, CA 92705

The State of California or its officers or agents shall not be responsible for the accuracy or completeness of electronic copies of this plan sheet.

1-This LOTB sheet was prepared in accordance with the Caltrans Soil & Rock Logging, Classification, & Presentation Manual (2010 Edition).

2-For protection of underground utility lines, hand-auger was used to remove top 5 to 10 feet of subsurface material for exploratory borings and Cone Penetration Testings.

3-2.5" to 1.4" blow counts conversion factors for fine-grain and coarse-grain soils have been 0.8 and 0.55, respectively.

BENCH MARK

GPS 0887
ELEVATION 65.915 FT
FD 2-1/2 CADT DISK IN CONC. CURB
FLUSH, STAMPED "LA-5-1.0, 1995"
LOCATED 90' N OF THE SOUTH SIDE
FIRESTONE BLVD 0.2 MI SE OF VALLEY VIEW
NORTHING 542395.636
EASTING 1997613.893
DATUM NAVD88

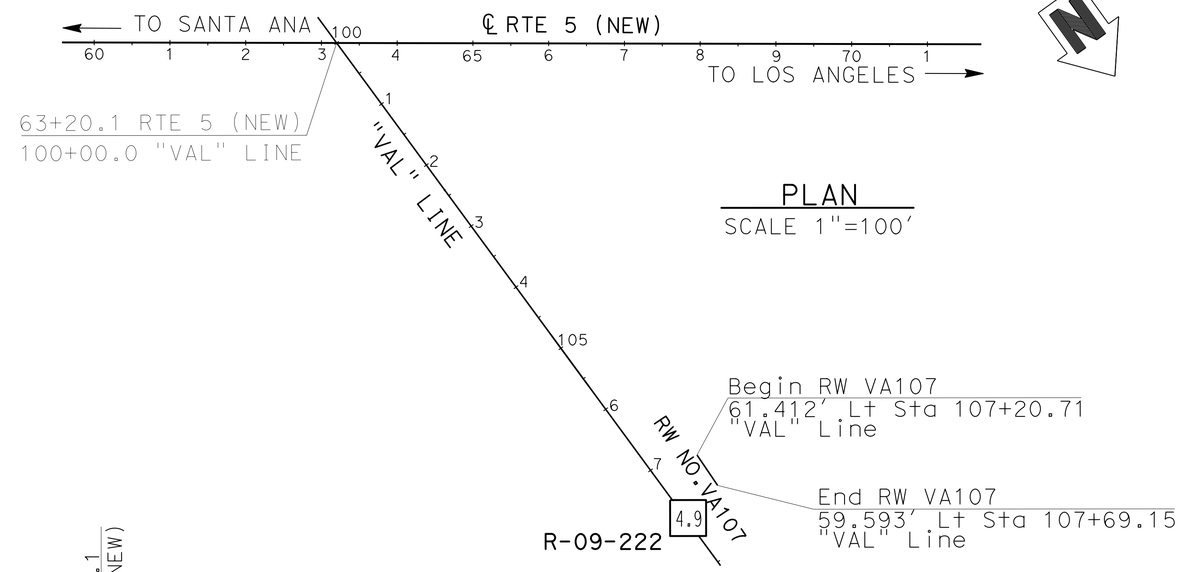

PLAN

SCALE 1"=100'

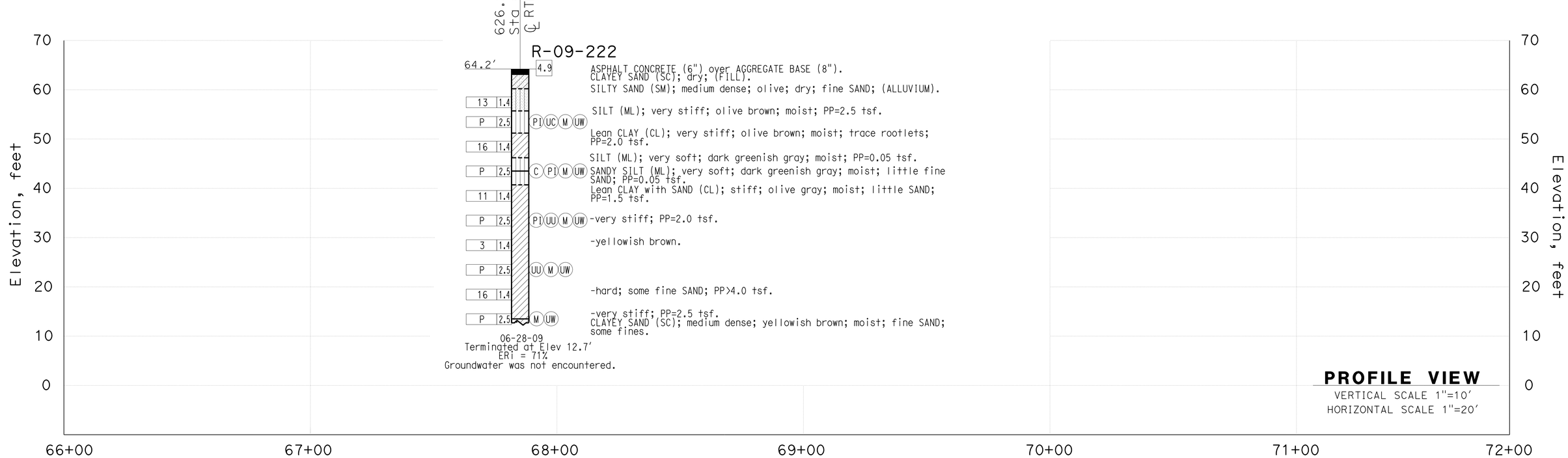

PROFILE VIEW

VERTICAL SCALE 1"=10'
HORIZONTAL SCALE 1"=20'

F.MOTAMED DESIGN OVERSIGHT	DRAWN BY	T.PANAH	EJ.JEON FIELD INVESTIGATION BY:	PREPARED FOR THE STATE OF CALIFORNIA DEPARTMENT OF TRANSPORTATION	M.G. SMITH PROJECT ENGINEER	BRIDGE NO. RW VA107	RETAINING WALL NO. VA107
05/20/15 SIGN OFF DATE	CHECKED BY	A.GHAZINOOR/L.KHALKHALI	DATE: 06/28/09			POST MILES 1.29	LOG OF TEST BORINGS SHEET 1 OF 1

GS CIVIL LOG OF TEST BORINGS SHEET (ENGLISH) (REV. 03/14/12)

ORIGINAL SCALE IN INCHES FOR REDUCED PLANS 0 1 2 3

UNIT: 3658
PROJECT NUMBER & PHASE: 07150001601 CONTRACT NO.: 07-2159U4

DISREGARD PRINTS BEARING EARLIER REVISION DATES → 5/12/15

REVISION DATES | SHEET 6 | OF 6

FILE => rwva107-g-lotb.dgn

USERNAME => s125624 DATE PLOTTED => 28-JAN-2016 TIME PLOTTED => 12:39

DIST	COUNTY	ROUTE	POST MILES TOTAL PROJECT	SHEET No.	TOTAL SHEETS
07	LA,Ora	5	0.0/1.5, 44.3/44.4	1611	1622

William Kemp 3-18-15
REGISTERED CIVIL ENGINEER DATE

1-25-16
PLANS APPROVAL DATE

REGISTERED PROFESSIONAL ENGINEER William D. Kemp No. 55730 Exp. 12/31/16 CIVIL STATE OF CALIFORNIA

The State of California or its officers or agents shall not be responsible for the accuracy or completeness of electronic copies of this plan sheet.

STANDARD PLANS 2010

	A10A	ABBREVIATIONS (SHEET 1 OF 2)
RSP	A10B	ABBREVIATIONS (SHEET 2 OF 2)
	A10C	LINES AND SYMBOLS (SHEET 1 OF 3)
	A10D	LINES AND SYMBOLS (SHEET 2 OF 3)
	A10E	LINES AND SYMBOLS (SHEET 3 OF 3)
RSP	A10F	LEGEND - SOIL (SHEET 1 OF 2)
RSP	A10G	LEGEND - SOIL (SHEET 2 OF 2)
	A10H	LEGEND - ROCK
	A62B	LIMITS OF PAYMENT FOR EXCAVATION AND BACKFILL- BRIDGE SURCHARGE AND WALL
	B0-3	BRIDGE DETAILS
RSP	B3-1A	RETAINING WALL TYPE 1 (CASE 1)
RSP	B3-5	RETAINING WALL DETAILS NO. 1
	B11-51	TUBULAR HAND RAILING
RSP	B11-54	CONCRETE BARRIER TYPE 26

INDEX TO PLANS

SHEET NO.	TITLE
1	GENERAL PLAN
2	RETAINING WALL DETAILS NO. 1
3	RETAINING WALL DETAILS NO. 2
4	ARCHITECTURAL TREATMENT DETAILS
5	BARRIER MOTIF DETAILS
6	LIMITS OF EXCAVATION AND BACKFILL
7	LOG OF TEST BORING SHEET 1 OF 1

STANDARD PLAN SHEET NO.

DETAIL NO.

QUANTITIES		
STRUCTURE EXCAVATION (RETAINING WALL)	840	CY
STRUCTURE BACKFILL (RETAINING WALL)	730	CY
STRUCTURAL CONCRETE, RETAINING WALL	140	CY
ARCHITECTURAL TREATMENT (SPLIT SLATE)	965	SQFT
BAR REINFORCING STEEL (RETAINING WALL)	18,500	LB
TUBULAR HANDRAILING (MODIFIED)	179	LF
CONCRETE BARRIER (TYPE 26 MODIFIED)	179	LF

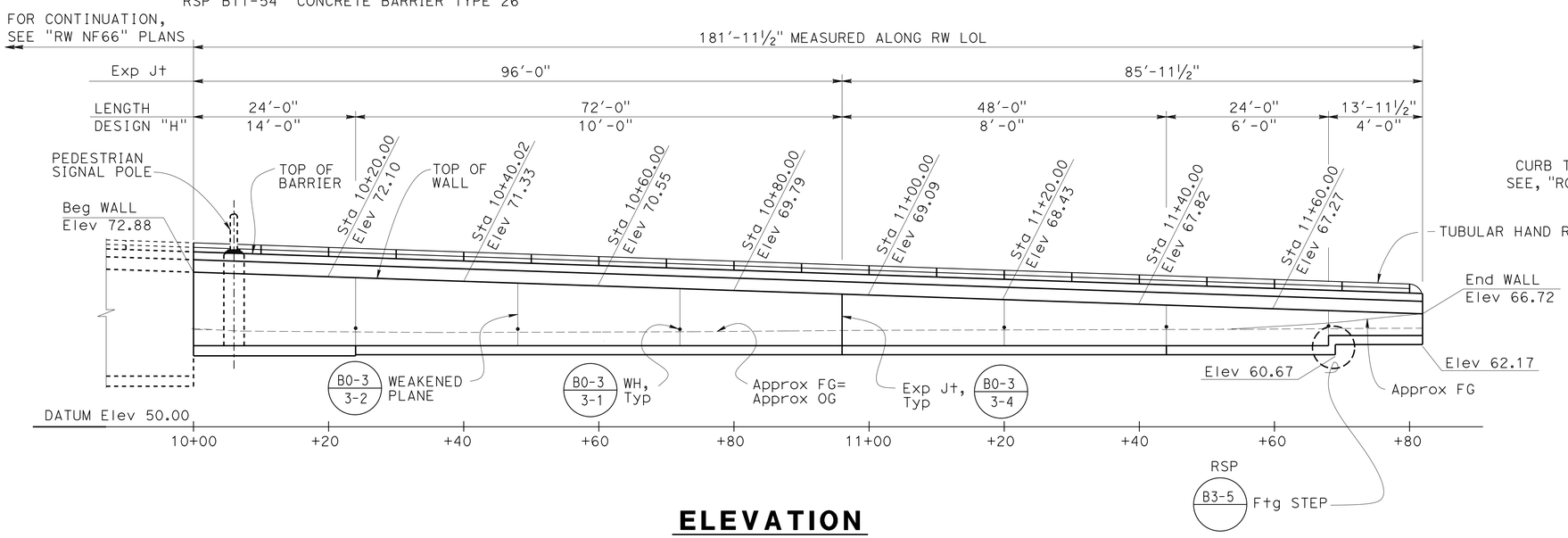

ELEVATION

1" = 10'-0"

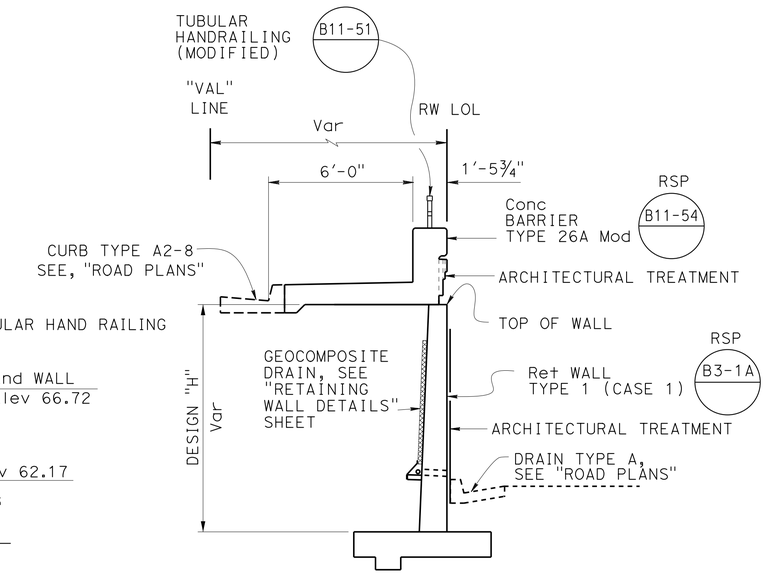

TYPICAL SECTION

NO SCALE

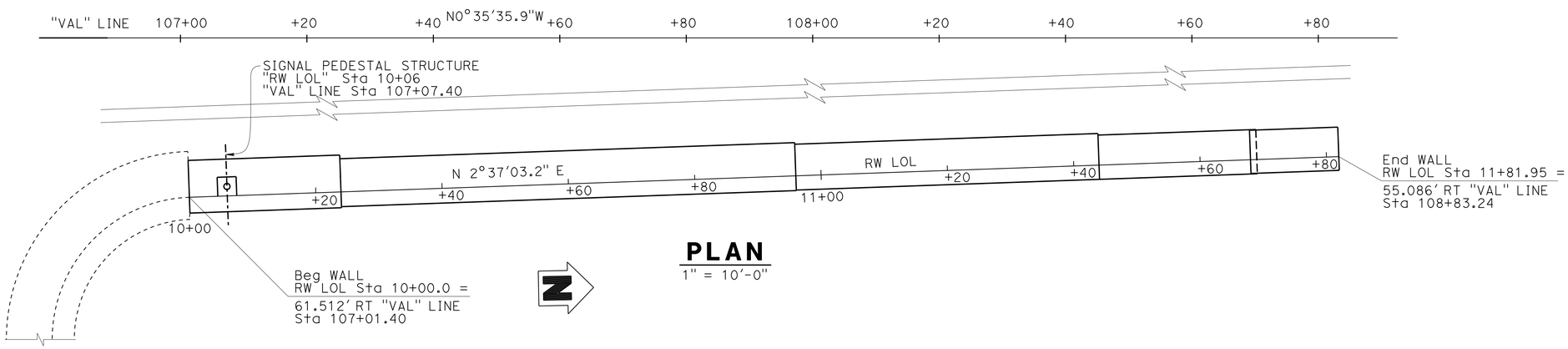

PLAN

1" = 10'-0"

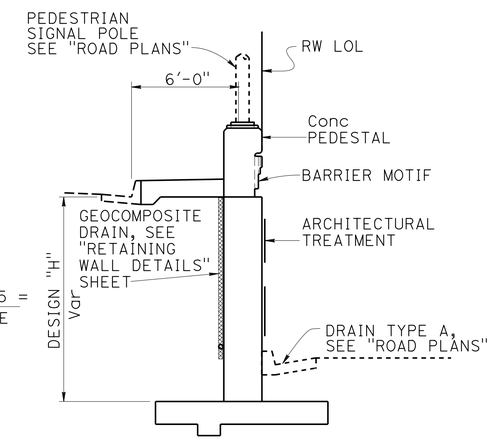

PEDESTAL SECTION

NO SCALE

Ramin Rashedi 3-18-15 DESIGN ENGINEER	DESIGN	BY Ruperd Wilson	CHECKED Cipriano Manansala	LOAD & RESISTANCE FACTOR DESIGN	LIVE LOADING: HL93 W/"LOW-BOY": PERMIT DESIGN VEHICLE
	DETAILS	BY Anthony Valdez	CHECKED Ruperd Wilson	LAYOUT BY Yeo Yoon	CHECKED Ruperd Wilson
	QUANTITIES	BY G. Reyes-Gutierrez	CHECKED Seiji Morimoto	SPECIFICATIONS BY Xiahong Li	PLANS AND SPECS COMPARED Xiahong Li

ORIGINAL SCALE IN INCHES FOR REDUCED PLANS 0 1 2 3

STATE OF CALIFORNIA DEPARTMENT OF TRANSPORTATION

DIVISION OF ENGINEERING SERVICES STRUCTURE DESIGN DESIGN BRANCH 11

BRIDGE NO. RW VA108 POST MILE 1.27

RETAINING WALL VA108
GENERAL PLAN

UNIT: 3587
PROJECT NUMBER & PHASE: 0715000160-1 CONTRACT NO.: 07-2159U4

DISREGARD PRINTS BEARING EARLIER REVISION DATES

REVISION DATES: 9-29-11 3-21-13 6-14-13 7-26-13 SHEET 1 OF 7

USERNAME => s125624 DATE PLOTTED => 28-JAN-2016 TIME PLOTTED =>

STRUCTURES DESIGN GENERAL PLAN SHEET (ENGLISH) (REV.09-01-10)

FILE => rwva108-a-gp.dgn

DIST	COUNTY	ROUTE	POST MILES TOTAL PROJECT	SHEET No.	TOTAL SHEETS
07	LA,Ora	5	0.0/1.5, 44.3/44.4	1612	1622

REGISTERED CIVIL ENGINEER — DATE 3-18-15

1-25-16
PLANS APPROVAL DATE

REGISTERED PROFESSIONAL ENGINEER — William D. Kemp — No. 55730 — Exp. 12/31/16 — CIVIL — STATE OF CALIFORNIA

The State of California or its officers or agents shall not be responsible for the accuracy or completeness of electronic copies of this plan sheet.

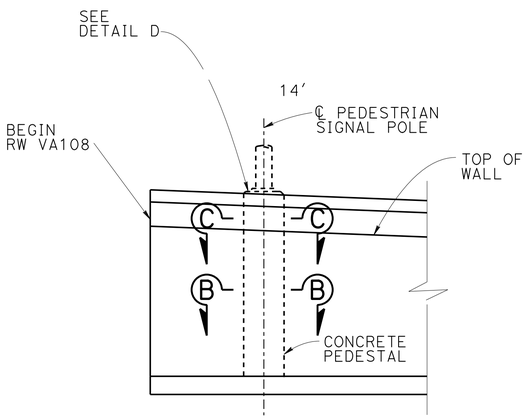

PARTIAL ELEVATION

NO SCALE

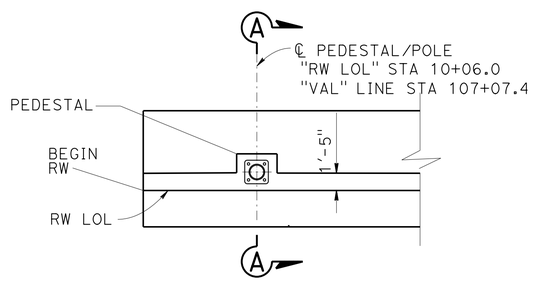

PARTIAL PLAN

NO SCALE

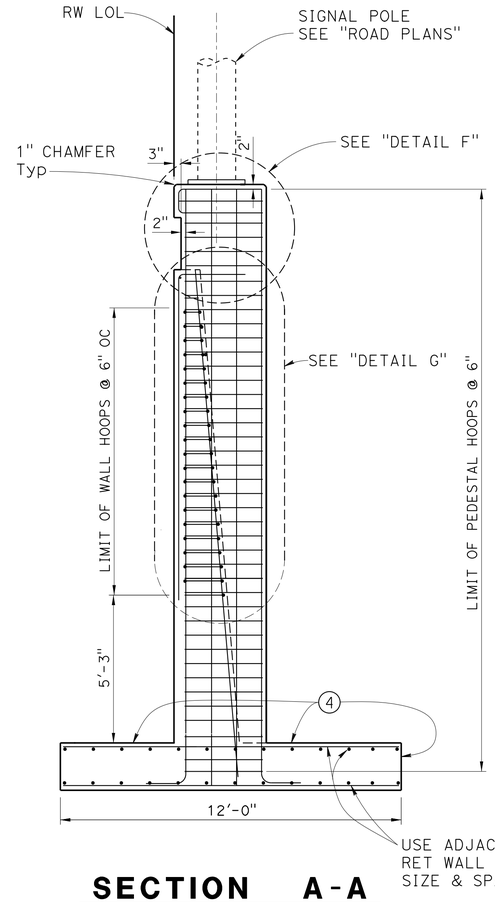

SECTION A-A

3/8" = 1'-0"

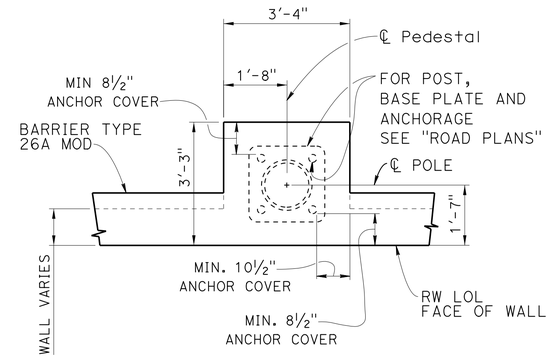

DETAIL D

½" = 1'-0"

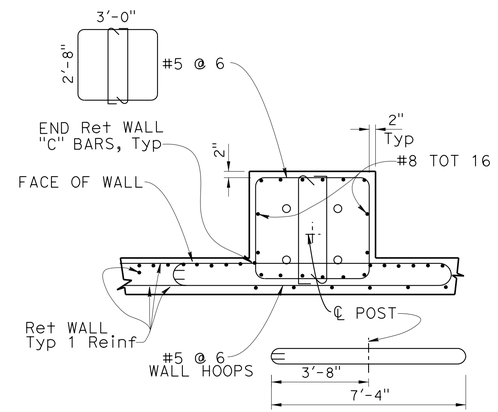

SECTION B-B

½" = 1'-0"

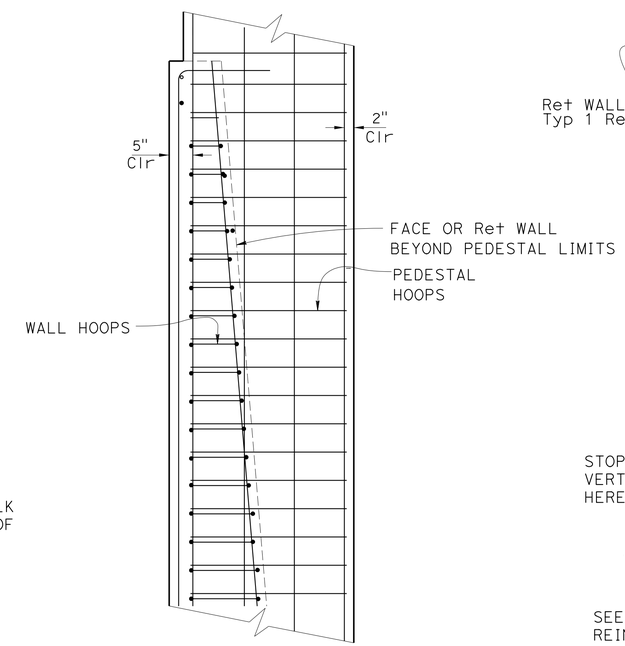

DETAIL G

¾" = 1'-0"

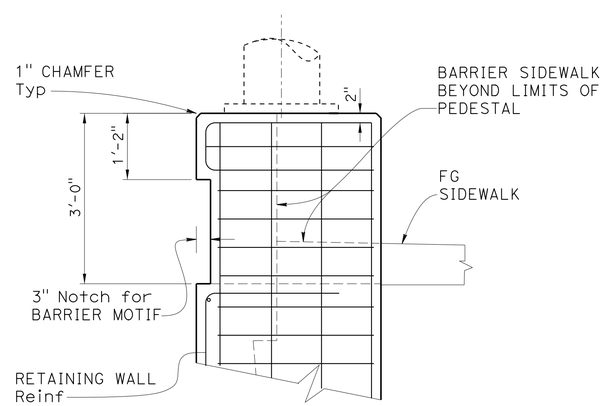

DETAIL F

¾" = 1'-0"

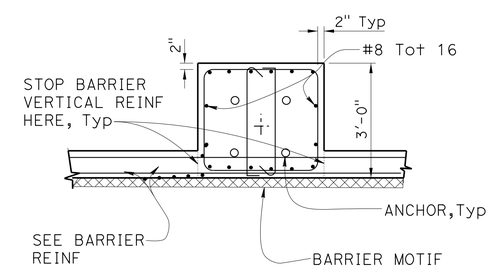

SECTION C-C

½" = 1'-0"

NOTES:

1. For Reinforcing Steel not shown see "REVISED STANDARD PLANS RETAINING WALL TYPE 1", B3-1A.
2. For base plate & Anchor Bolts, See "ROAD PLANS".
3. Concrete strength shall be achieved and wall backfilled prior to installation of Sign structure/Pole.
4. Match reinforcement & Footing size with adjacent wall Footing.
5. Conc for Pedestal shall be poured simultaneously with Retaining Wall Conc. There shall be no construction Joint between Pedestal and Retaining Wall.

	BY	CHECKED
DESIGN	Ruperd Wilson	Cipriano Manansala
DETAILS	Jaime Ramirez	Ruperd Wilson
QUANTITIES	G. Reyes-Gutierrez	Seiji Morimoto

STATE OF CALIFORNIA
DEPARTMENT OF TRANSPORTATION

DIVISION OF ENGINEERING SERVICES
STRUCTURE DESIGN
DESIGN BRANCH 11

BRIDGE NO. RW VA108
POST MILE 1.27

RETAINING WALL VA108
RETAINING WALL DETAILS NO. 1

STRUCTURES DESIGN DETAIL SHEET (ENGLISH) (REV. 09-01-10)

ORIGINAL SCALE IN INCHES FOR REDUCED PLANS 0 1 2 3

UNIT: 3587
PROJECT NUMBER & PHASE: 0715000160-1
CONTRACT NO.: 07-2159U4

DISREGARD PRINTS BEARING EARLIER REVISION DATES

REVISION DATES: 8-29-11 03-26-13 6-13-13 7-26-13

SHEET 2 OF 7

FILE => rwva108-b-retdt1.dgn

USERNAME => s125624 DATE PLOTTED => 28-JAN-2016 TIME PLOTTED => 12:39

DIST	COUNTY	ROUTE	POST MILES TOTAL PROJECT	SHEET No.	TOTAL SHEETS
07	LA,Ora	5	0.0/1.5, 44.3/44.4	1613	1622

REGISTERED CIVIL ENGINEER — DATE: 3-18-15

1-25-16
PLANS APPROVAL DATE

REGISTERED PROFESSIONAL ENGINEER — William D. Kemp — No. 55730 — Exp. 12/31/16 — CIVIL — STATE OF CALIFORNIA

The State of California or its officers or agents shall not be responsible for the accuracy or completeness of electronic copies of this plan sheet.

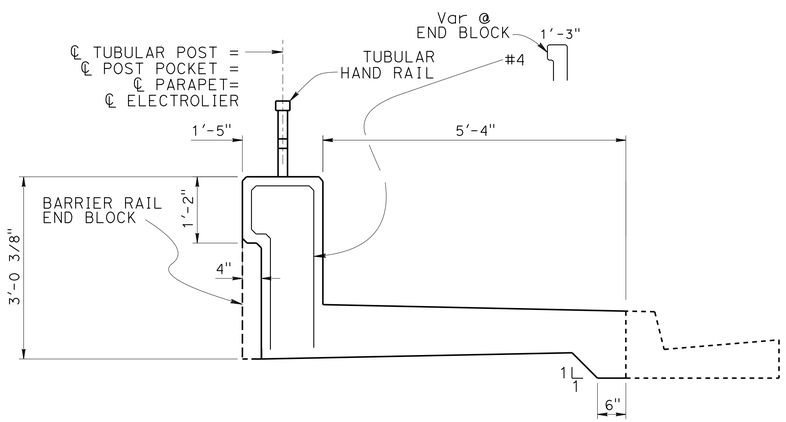

CONCRETE BARRIER TYPE 26A Mod

3/4" = 1'-0"

Note: For details and reinforcement not shown see B11-54 RSP

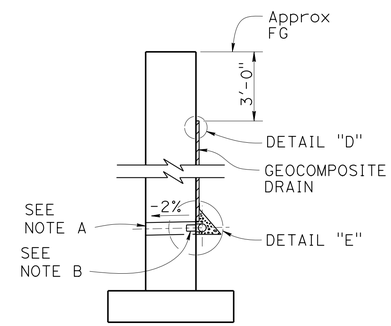

WALL SECTION

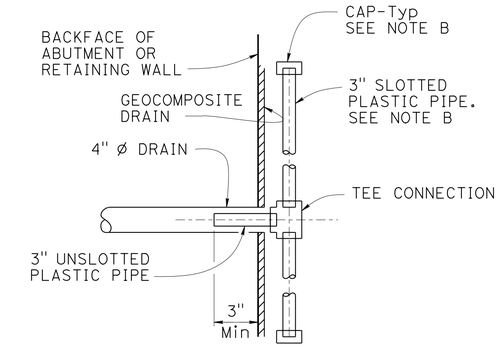

SECTION K-K

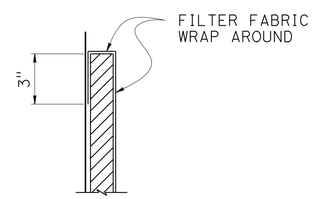

DETAIL "D"

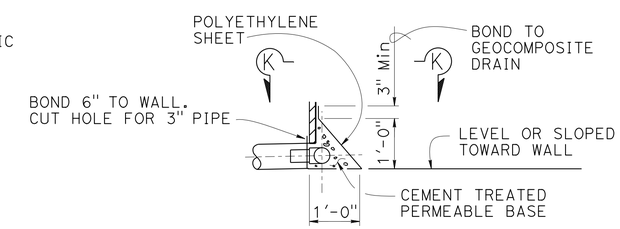

DETAIL "E"

WEEP HOLE AND GEOCOMPOSITE DRAIN

NO SCALE

NOTES: (GEOCOMPOSITE DRAIN)

A. 4" Ø drains at intermediate sag points and at 25'-0" center to center (9'-0" c-c for Type 3 and 9'-2" c-c for Type 4 retaining walls). For walls adjacent to sidewalks or curbs, provide 4" Ø cast iron or asbestos cement pipe under the sidewalk to discharge through curb face. Exposed wall drains shall be located 3" ± above finished grade.

B. Geocomposite drain, cement treated permeable base, and 3" Ø slotted plastic pipe continuous behind retaining wall or abutment. Cap ends of pipe. Provide "Tee" connection at each 4" Ø drain.

C. Connect the low end of plastic pipe to the main outlet pipe as applicable.

	BY	CHECKED
DESIGN	Rupert Wilson	Cipriano Manansala
DETAILS	Jaime Ramirez	Rupert Wilson
QUANTITIES	G. Reyes-Gutierrez	Seiji Morimoto

STATE OF CALIFORNIA
DEPARTMENT OF TRANSPORTATION

DIVISION OF ENGINEERING SERVICES
STRUCTURE DESIGN
DESIGN BRANCH 11

BRIDGE NO. RW VA108
POST MILE 1.27

RETAINING WALL VA108
RETAINING WALL DETAILS NO. 2

STRUCTURES DESIGN DETAIL SHEET (ENGLISH) (REV. 09-01-10)

ORIGINAL SCALE IN INCHES FOR REDUCED PLANS 0 1 2 3

UNIT: 3587
PROJECT NUMBER & PHASE: 0715000160-1
CONTRACT NO.: 07-2159U4

DISREGARD PRINTS BEARING EARLIER REVISION DATES

REVISION DATES: 10-22-12, 7-26-13, 12-5-13, 6-13-13

SHEET 3 OF 7

FILE => rwva108-c-retdt2.dgn

USERNAME => s125624 DATE PLOTTED => 28-JAN-2016 TIME PLOTTED => 12:39

DIST	COUNTY	ROUTE	POST MILES TOTAL PROJECT	SHEET No.	TOTAL SHEETS
07	LA,Ora	5	0.0/1.5, 44.3/44.4	1614	1622

REGISTERED CIVIL ENGINEER 3-18-15 DATE

1-25-16
PLANS APPROVAL DATE

REGISTERED PROFESSIONAL ENGINEER William D. Kemp No. 55730 Exp. 12/31/16 CIVIL STATE OF CALIFORNIA

The State of California or its officers or agents shall not be responsible for the accuracy or completeness of scanned copies of this plan sheet.

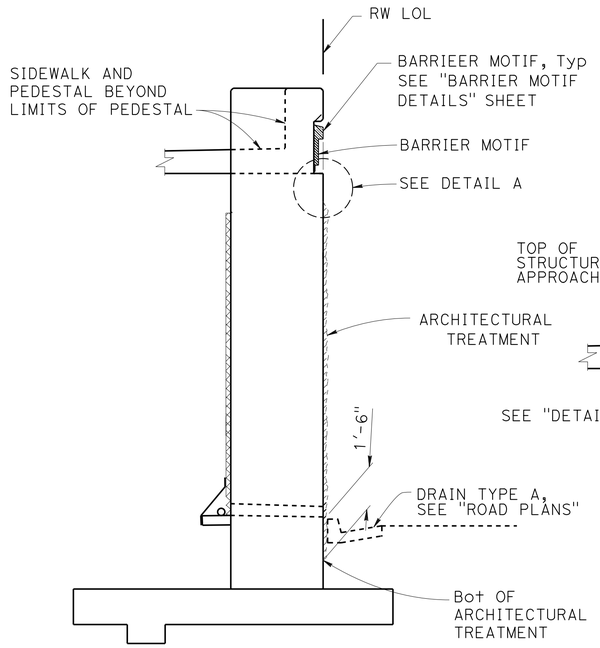

SECTION A-A
NO SCALE

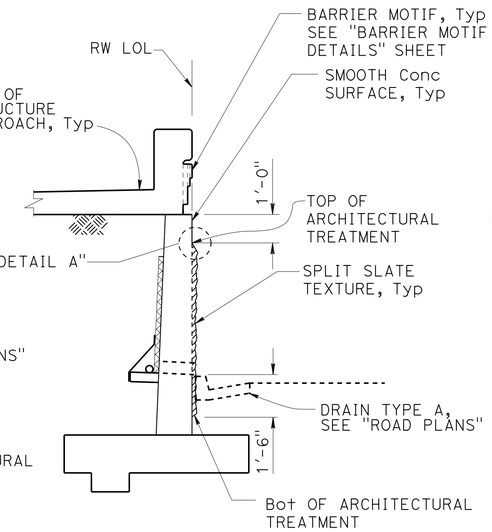

SECTION B-B
NO SCALE

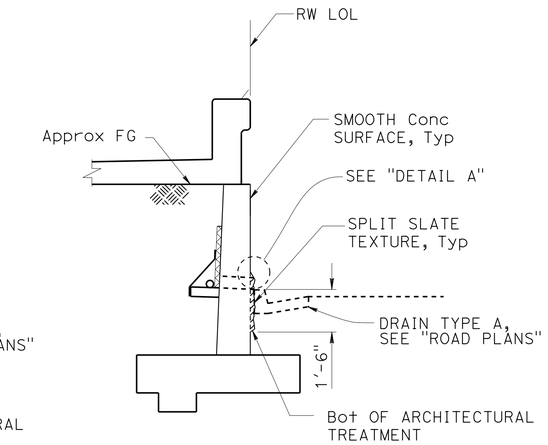

SECTION C-C
NO SCALE

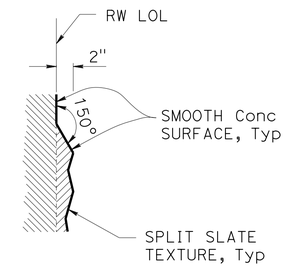

DETAIL A
NO SCALE

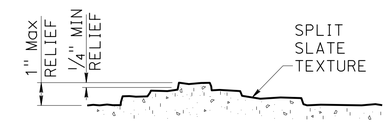

SECTION H-H
NO SCALE

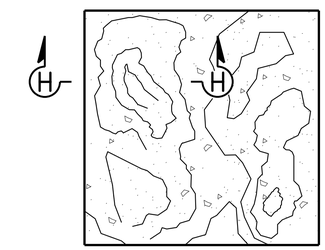

SPLIT SLATE TEXTURE
NO SCALE

Note:
All Surface Relief and Texture shall be measured from RW LOL, Typ

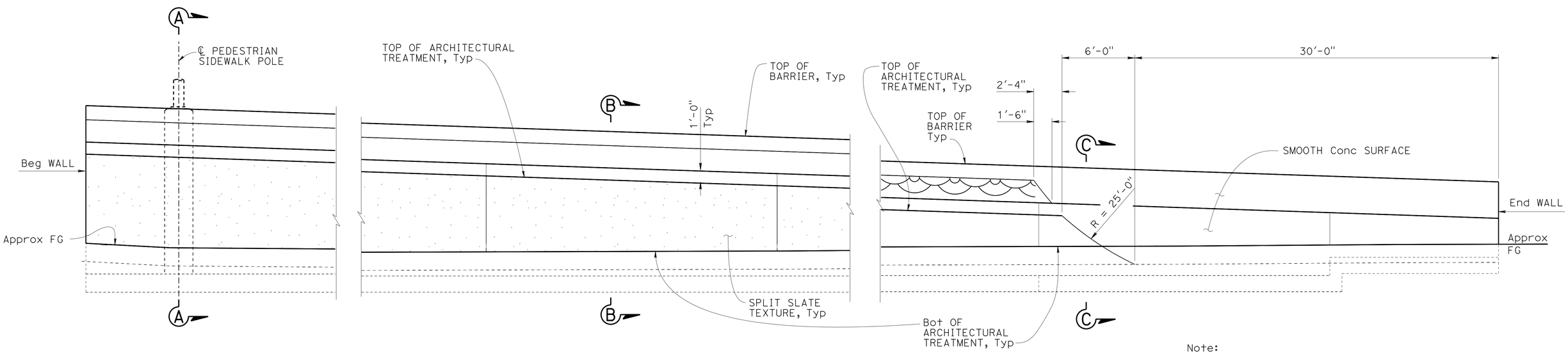

ELEVATION
1/4" = 1'-0"

Note:
For Barrier Architectural details see "BARRIER MOTIF DETAILS" sheet.

	BY	CHECKED
DESIGN	H. Javier Chavez	Isaac Tasabia
DETAILS	Jaime Ramirez	Isaac Tasabia
QUANTITIES	G. Reyes-Gutierrez	Seiji Morimoto

STATE OF CALIFORNIA
DEPARTMENT OF TRANSPORTATION

DIVISION OF ENGINEERING SERVICES
STRUCTURE DESIGN
DESIGN BRANCH 11

BRIDGE NO. RW VA108
POST MILE 1.27

RETAINING WALL VA108
ARCHITECTURAL TREATMENT DETAILS

STRUCTURES DESIGN DETAIL SHEET (ENGLISH) (REV. 09-01-10)

ORIGINAL SCALE IN INCHES FOR REDUCED PLANS 0 1 2 3

UNIT: 3587
PROJECT NUMBER & PHASE: 0715000160-1
CONTRACT NO.: 07-2159u4

DISREGARD PRINTS BEARING EARLIER REVISION DATES

REVISION DATES 1-10-13 12-5-13 6-13-13 7-26-13

SHEET 4 OF 7

FILE => rwva108-g-arch1.dgn

USERNAME => s125624 DATE PLOTTED => 28-JAN-2016 TIME PLOTTED => 12:39

DIST	COUNTY	ROUTE	POST MILES TOTAL PROJECT	SHEET No.	TOTAL SHEETS
07	LA,Ora	5	0.0/1.5, 44.3/44.4	1615	1622

REGISTERED CIVIL ENGINEER — DATE 3-18-15

1-25-16
PLANS APPROVAL DATE

REGISTERED PROFESSIONAL ENGINEER — William D. Kemp — No. 55730 — Exp. 12/31/16 — CIVIL — STATE OF CALIFORNIA

The State of California or its officers or agents shall not be responsible for the accuracy or completeness of electronic copies of this plan sheet.

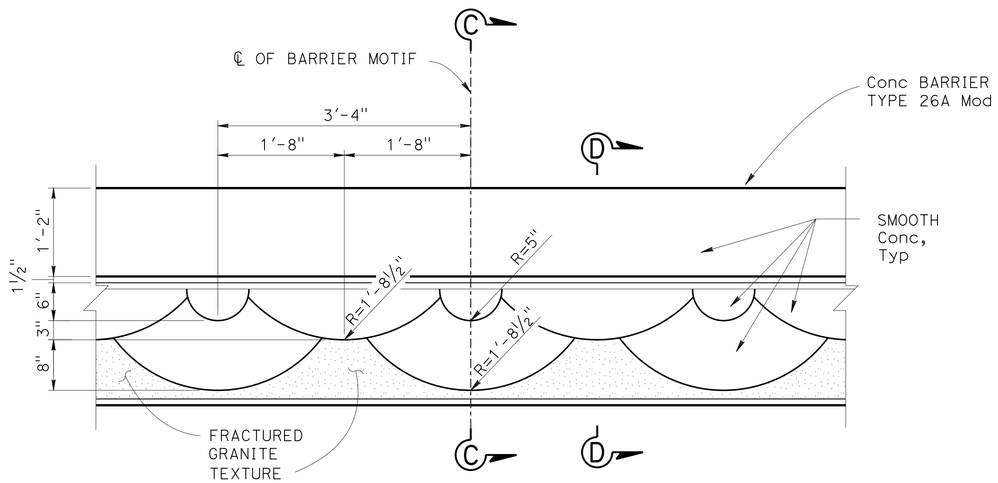

ELEVATION - BARRIER MOTIF
NO SCALE

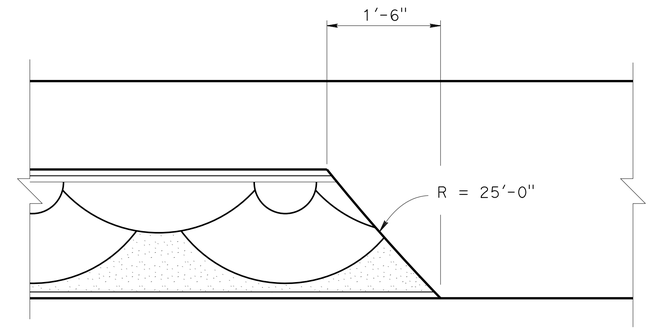

BARRIER END DETAIL
NO SCALE

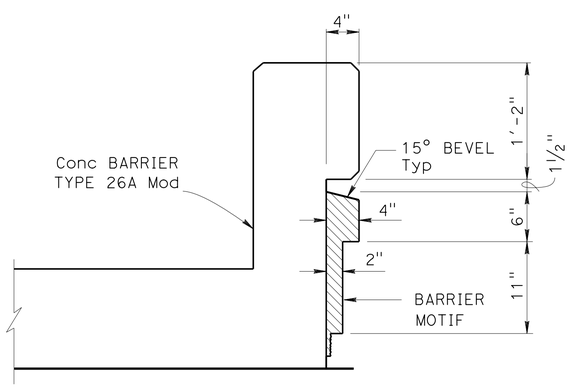

SECTION C-C
NO SCALE

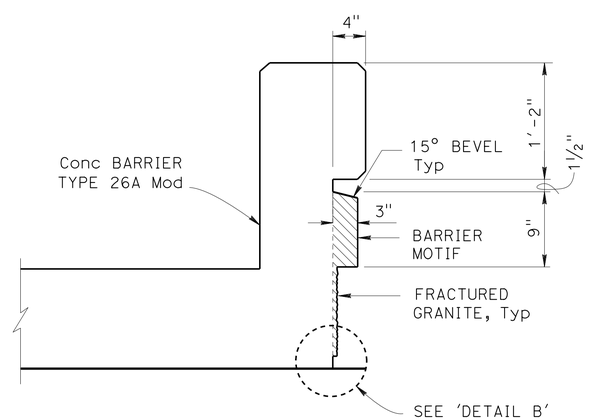

SECTION D-D
NO SCALE

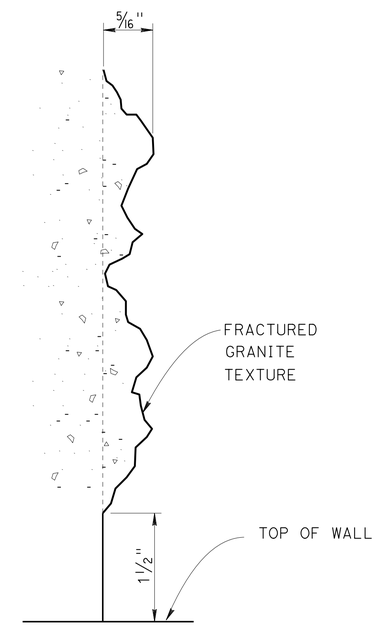

DETAIL B
NO SCALE

DESIGN	BY H. Javier Chavez	CHECKED Issac Tasabia	
DETAILS	BY Anthony Valdez	CHECKED Issac Tasabia	
QUANTITIES	BY G. Reyes-Gutierrez	CHECKED Seiji Morimoto	

STATE OF CALIFORNIA
DEPARTMENT OF TRANSPORTATION

DIVISION OF ENGINEERING SERVICES
STRUCTURE DESIGN
DESIGN BRANCH 11

BRIDGE NO. RW VA108
POST MILE 1.27

RETAINING WALL VA108
BARRIER MOTIF DETAILS

STRUCTURES DESIGN DETAIL SHEET (ENGLISH) (REV. 09-01-10)

ORIGINAL SCALE IN INCHES FOR REDUCED PLANS 0 1 2 3

UNIT: 3587
PROJECT NUMBER & PHASE: 0715000160-1
CONTRACT NO.: 07-2159u4

DISREGARD PRINTS BEARING EARLIER REVISION DATES

REVISION DATES: 6-21-13 1-14-13 3-21-13 7-26-13

SHEET 5 OF 7

FILE => rwva108-g-arch2.dgn

USERNAME => s125624 DATE PLOTTED => 28-JAN-2016 TIME PLOTTED => 12:39

DIST	COUNTY	ROUTE	POST MILES TOTAL PROJECT	SHEET No.	TOTAL SHEETS
07	LA,Ora	5	0.0/1.5, 44.3/44.4	1616	1622

William Kemp 3-18-15
REGISTERED CIVIL ENGINEER DATE

1-25-16
PLANS APPROVAL DATE

REGISTERED PROFESSIONAL ENGINEER
William D. Kemp
No. 55730
Exp. 12/31/16
CIVIL
STATE OF CALIFORNIA

The State of California or its officers or agents shall not be responsible for the accuracy or completeness of electronic copies of this plan sheet.

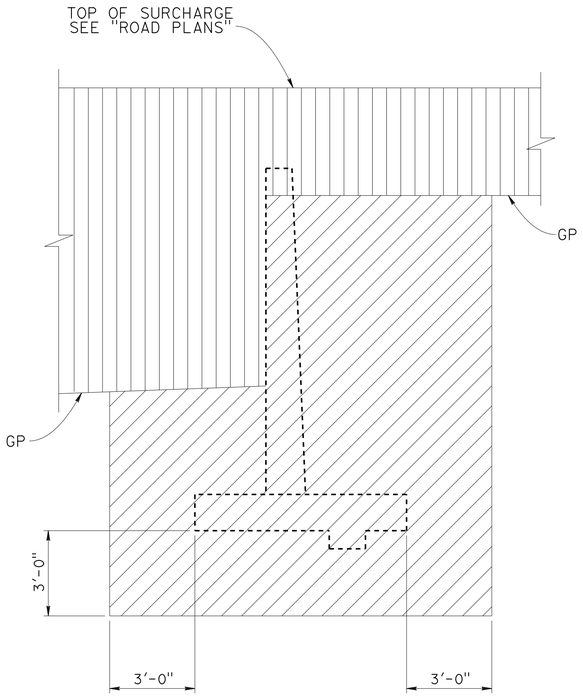

EXCAVATION

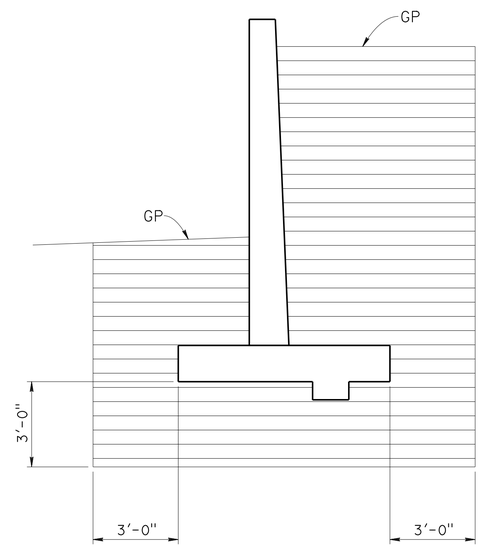

BACKFILL

LEGEND:

STRUCTURE EXCAVATION

ROADWAY EXCAVATION

STRUCTURE BACKFILL

GP - PLANNED GRADING PLANE

LIMITS OF EXCAVATION AND BACKFILL

NO SCALE

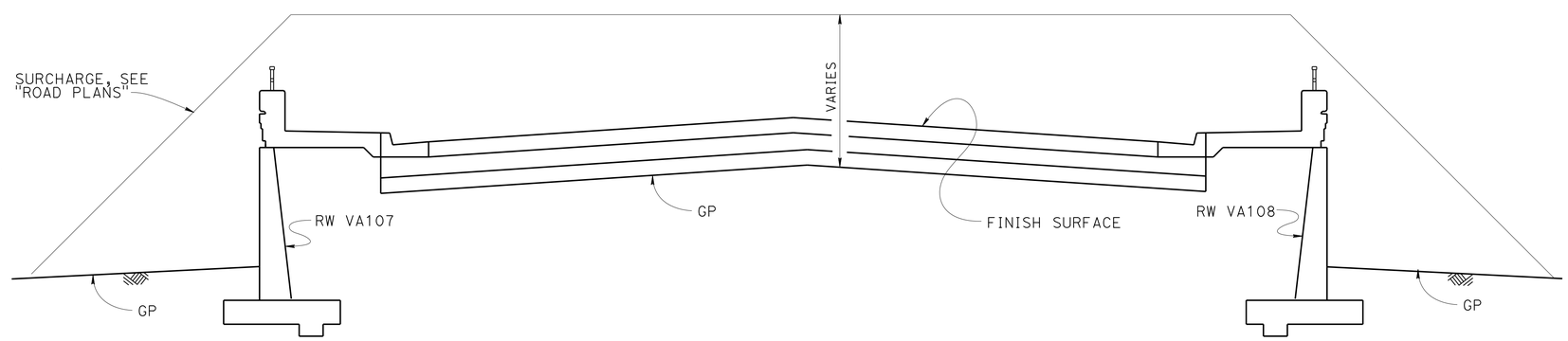

EMBANKMENT SURCHARGE

NO SCALE

DESIGN	BY Yeo Yoon	CHECKED B. Kemp	
DETAILS	BY Jaime Ramirez	CHECKED B. Kemp	
QUANTITIES	BY G. Reyes-Gutierrez	CHECKED Seiji Morimoto	

STATE OF CALIFORNIA
DEPARTMENT OF TRANSPORTATION

DIVISION OF ENGINEERING SERVICES
STRUCTURE DESIGN
DESIGN BRANCH 11

BRIDGE NO. RW VA108
POST MILE 1.27

RETAINING WALL VA108
LIMITS OF EXCAVATION AND BACKFILL

STRUCTURES DESIGN DETAIL SHEET (ENGLISH) (REV. 09-01-10)

ORIGINAL SCALE IN INCHES FOR REDUCED PLANS 0 1 2 3

UNIT: 3587
PROJECT NUMBER & PHASE: 0715000160-1
CONTRACT NO.: 07-2159U4

DISREGARD PRINTS BEARING EARLIER REVISION DATES

REVISION DATES: ~~4-26-13~~ 7-26-13

SHEET 6 OF 7

FILE => rwva108-u-exc.dgn

USERNAME => s125624 DATE PLOTTED => 28-JAN-2016 TIME PLOTTED => 12:39

BENCH MARK

GPS 0887
ELEVATION 65.915 FT
FD 2-1/2 CADT DISK IN CONC. CURB
FLUSH, STAMPED "LA-5-1.0, 1995"
LOCATED 90' N OF THE SOUTH SIDE
FIRESTONE BLVD 0.2 MI SE OF VALLEY VIEW
NORTHING 542395.636
EASTING 1997613.893
DATUM NAVD88

DIST	COUNTY	ROUTE	POST MILES TOTAL PROJECT	SHEET No.	TOTAL SHEETS
07	LA,Ora	5	0.0/1.5, 44.3/44.4	1617	1622

REGISTERED CIVIL ENGINEER — DATE 05/20/15

1-25-16
PLANS APPROVAL DATE

URS CORPORATION
2020 EAST FIRST STREET, SUITE 400
SANTA ANA, CA 92705

The State of California or its officers or agents shall not be responsible for the accuracy or completeness of electronic copies of this plan sheet.

REGISTERED PROFESSIONAL ENGINEER — MICHAEL G. SMITH No. 2229 Exp. 03/31/16 GEOTECHNICAL — STATE OF CALIFORNIA

1-This LOTB sheet was prepared in accordance with the Caltrans Soil & Rock Logging, Classification, & Presentation Manual (2010 Edition).

2-For protection of underground utility lines, hand-auger was used to remove top 5 to 10 feet of subsurface material for exploratory borings and Cone Penetration Testings.

3-2.5" to 1.4" blow counts conversion factors for fine-grain and coarse-grain soils have been 0.8 and 0.55, respectively.

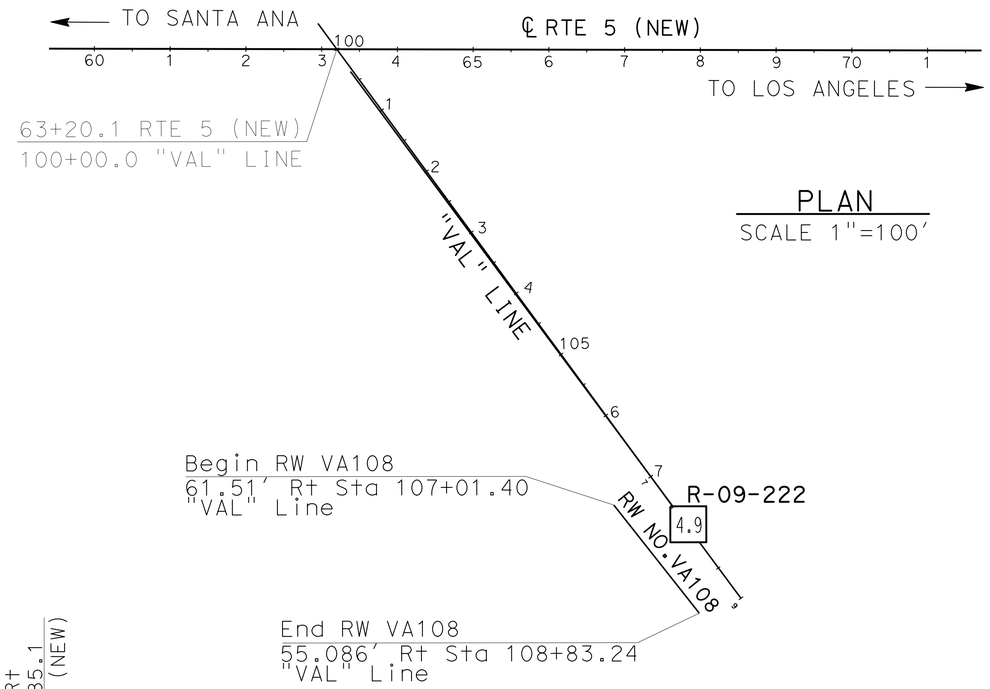

PLAN
SCALE 1"=100'

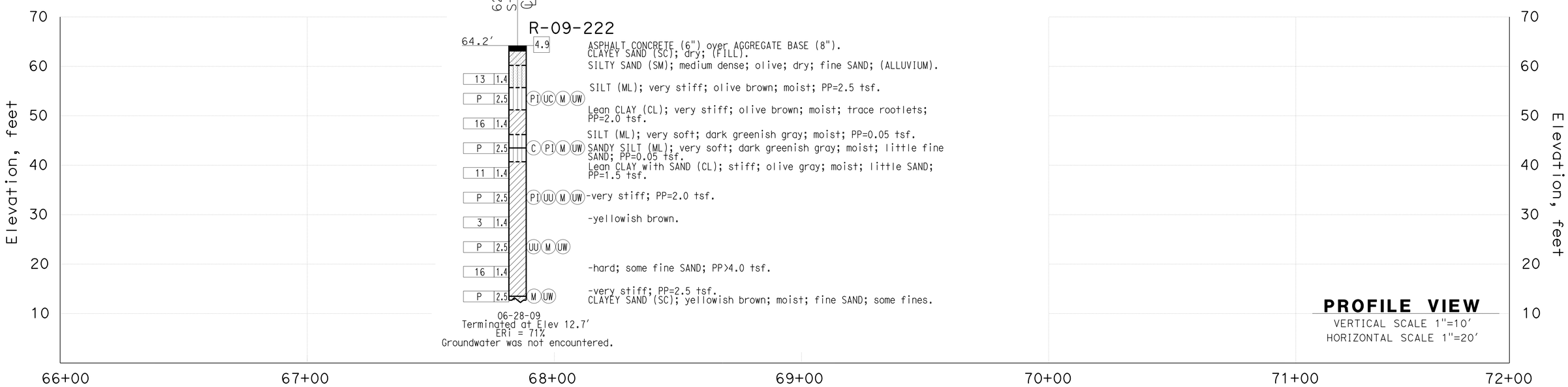

PROFILE VIEW
VERTICAL SCALE 1"=10'
HORIZONTAL SCALE 1"=20'

F.MOTAMED DESIGN OVERSIGHT 05/20/15 SIGN OFF DATE	DRAWN BY	T.PANAH	EJ.JEON FIELD INVESTIGATION BY: DATE: 06/28/09	PREPARED FOR THE STATE OF CALIFORNIA DEPARTMENT OF TRANSPORTATION	M.G. SMITH PROJECT ENGINEER	BRIDGE NO. RW VA108 POST MILES 1.27
	CHECKED BY	A.GHAZINOOR/L.KHALKHALI				

RETAINING WALL NO. VA108
LOG OF TEST BORINGS SHEET 1 OF 1

GS CIVIL LOG OF TEST BORINGS SHEET (ENGLISH) (REV. 03/14/12)

ORIGINAL SCALE IN INCHES FOR REDUCED PLANS 0 1 2 3

UNIT: 3658
PROJECT NUMBER & PHASE: 07150001601 CONTRACT NO.: 07-2159U4

DISREGARD PRINTS BEARING EARLIER REVISION DATES → 5/12/15

REVISION DATES | SHEET 7 OF 7

FILE => rwva108-v-lotb.dgn

USERNAME => s125624 DATE PLOTTED => 28-JAN-2016 TIME PLOTTED => 12:39

DIST	COUNTY	ROUTE	POST MILES TOTAL PROJECT	SHEET No.	TOTAL SHEETS
07	LA,Ora	5	0.0/1.5, 44.3/44.4	1618	1622

REGISTERED CIVIL ENGINEER 3-18-15 DATE

1-25-16
PLANS APPROVAL DATE

REGISTERED PROFESSIONAL ENGINEER WILLIAM D. KEMP No. 55730 Exp. 12/31/16 CIVIL STATE OF CALIFORNIA

The State of California or its officers or agents shall not be responsible for the accuracy or completeness of electronic copies of this plan sheet.

INDEX TO PLANS

SHEET NO.	TITLE
1	GENERAL PLAN
2	RETAINING WALL DETAILS
3	ARCHITECTURAL TREATMENT DETAILS
4	LIMITS OF EXCAVATION AND BACKFILL
5	LOG OF TEST BORINGS SHEET 1 OF 1

QUANTITIES

STRUCTURE EXCAVATION (RETAINING WALL)	420	CY
STRUCTURE BACKFILL (RETAINING WALL)	360	CY
STRUCTURAL CONCRETE, RETAINING WALL	65	CY
ARCHITECTURAL TREATMENT (SPLIT SLATE)	495	SQFT
BAR REINFORCING STEEL (RETAINING WALL)	7,600	LB
TUBULAR HANDRAILING (MODIFIED)	107	LF
CONCRETE BARRIER (TYPE 26 MODIFIED)	107	LF

STANDARD PLANS 2010

	A10A	ABBREVIATIONS (SHEET 1 OF 2)
RSP	A10B	ABBREVIATIONS (SHEET 2 OF 2)
	A10C	LINES AND SYMBOLS (SHEET 1 OF 3)
	A10D	LINES AND SYMBOLS (SHEET 2 OF 3)
	A10E	LINES AND SYMBOLS (SHEET 3 OF 3)
RSP	A10F	LEGEND - SOIL (SHEET 1 OF 2)
RSP	A10G	LEGEND - SOIL (SHEET 2 OF 2)
	A10H	LEGEND - ROCK
	A62B	LIMITS OF PAYMENT FOR EXCAVATION AND BACKFILL- BRIDGE SURCHARGE AND WALL
	B0-3	BRIDGE DETAILS
RSP	B3-4A	RETAINING WALL TYPE 5 (CASE 1)
RSP	B3-5	RETAINING WALL DETAILS NO. 1
	B3-6	RETAINING WALL DETAILS No. 2
	B11-51	TUBULAR HAND RAILING
RSP	B11-54	CONCRETE BARRIER TYPE 26

STANDARD PLAN SHEET NO.
DETAIL NO.

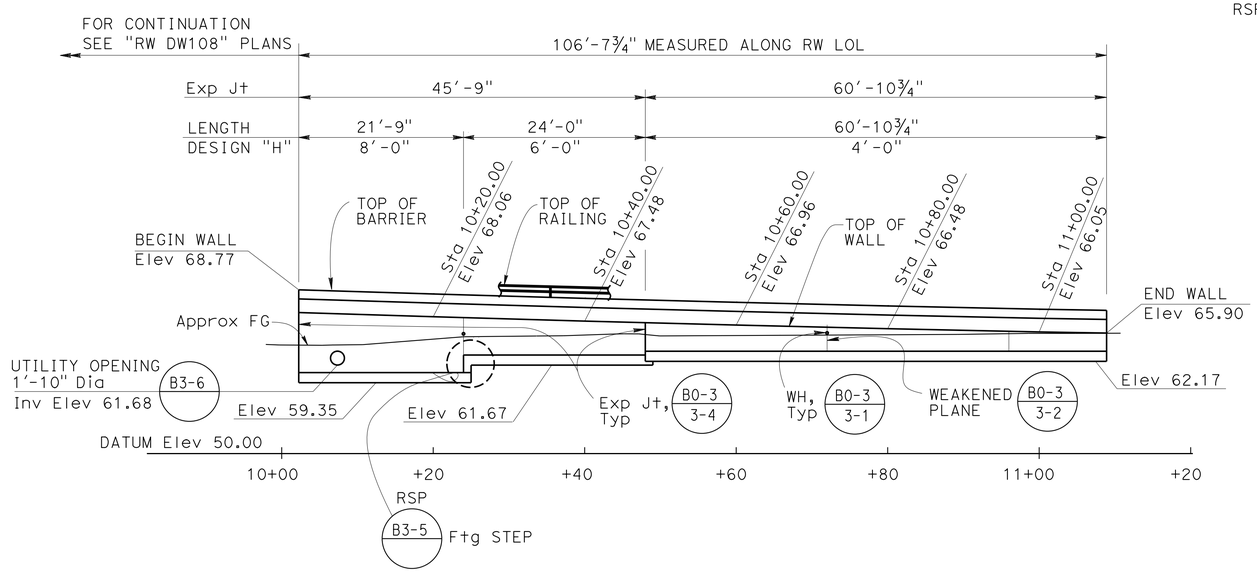

MIRRORED ELEVATION

1" = 10'-0"

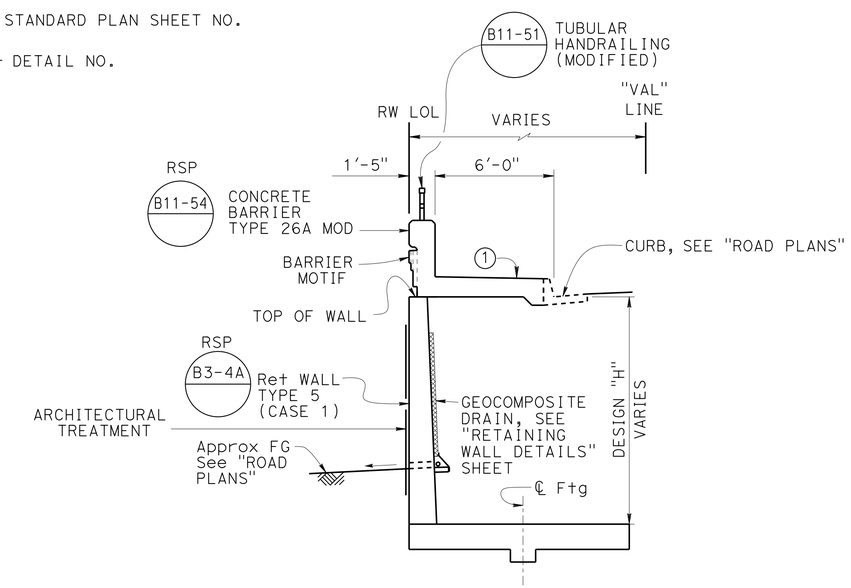

TYPICAL SECTION

No Scale

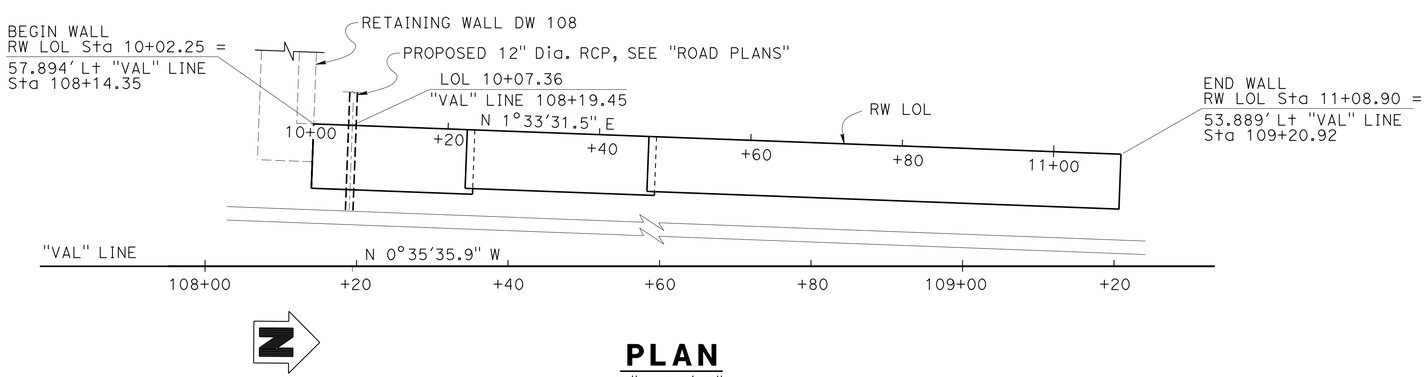

PLAN

1" = 10'-0"

NOTE:

1. Transition to Depressed Sidewalk between Sta 10+02.25 and Sta 10+06.52, see "ROAD PLANS"

Ramin Rashedi 3-18-15 DESIGN ENGINEER	DESIGN	BY Yeo Yoon	CHECKED Ruperd Wilson	LOAD & RESISTANCE FACTOR DESIGN	LIVE LOADING: HL93 W/"LOW-BOY": PERMIT DESIGN VEHICLE
	DETAILS	BY Jaime Ramirez	CHECKED Ruperd Wilson	LAYOUT BY Yeo Yoon	CHECKED Ruperd Wilson
	QUANTITIES	BY G. Reyes-Gutierrez	CHECKED Herman P.	SPECIFICATIONS BY Xiahong Li	PLANS AND SPECS COMPARED Xiahong Li

ORIGINAL SCALE IN INCHES FOR REDUCED PLANS 0 1 2 3

STATE OF CALIFORNIA
DEPARTMENT OF TRANSPORTATION

DIVISION OF ENGINEERING SERVICES
STRUCTURE DESIGN
DESIGN BRANCH 11

BRIDGE NO. RW VA109
POST MILE 1.30

RETAINING WALL VA109
GENERAL PLAN

UNIT: 3587
PROJECT NUMBER & PHASE: 0715000160-1
CONTRACT NO.: 07-2159u4

DISREGARD PRINTS BEARING EARLIER REVISION DATES

REVISION DATES: 9-28-11 7-26-13 3-24-13 6-11-13

SHEET 1 OF 5

STRUCTURES DESIGN GENERAL PLAN SHEET (ENGLISH) (REV.09-01-10)

FILE => rwva109-a-gp.dgn

USERNAME => s125624 DATE PLOTTED => 28-JAN-2016 TIME PLOTTED =>

DIST	COUNTY	ROUTE	POST MILES TOTAL PROJECT	SHEET No.	TOTAL SHEETS
07	LA,Ora	5	0.0/1.5, 44.3/44.4	1619	1622

William Kemp 3-18-15
REGISTERED CIVIL ENGINEER DATE

1-25-16
PLANS APPROVAL DATE

REGISTERED PROFESSIONAL ENGINEER William D. Kemp No. 55730 Exp. 12/31/16 CIVIL STATE OF CALIFORNIA

The State of California or its officers or agents shall not be responsible for the accuracy or completeness of electronic copies of this plan sheet.

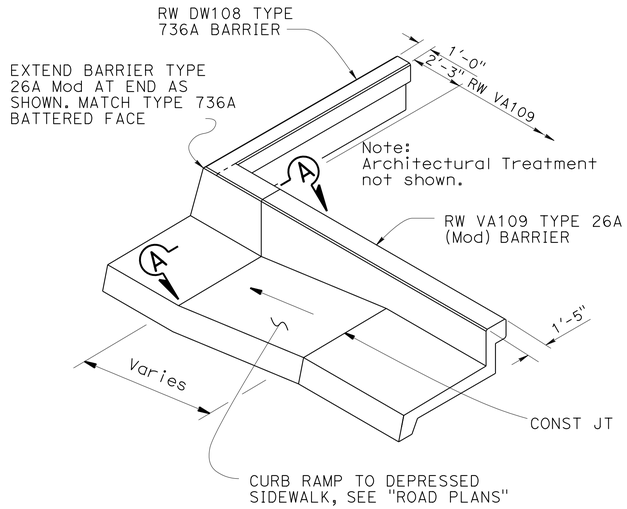

BARRIER TRANSITION DETAIL

NO SCALE

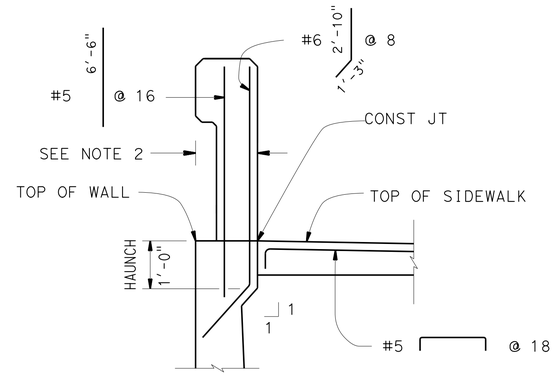

NOTES:

1. APPLY DETAIL FROM THE BEGINNING OF CURB RAMP CONSTRUCTION JOINT TO THE END OF RETAINING WALL CORNER
2. HAUNCH WIDTH MUST MATCH BARRIER RAIL WIDTH

VIEW A-A

NO SCALE

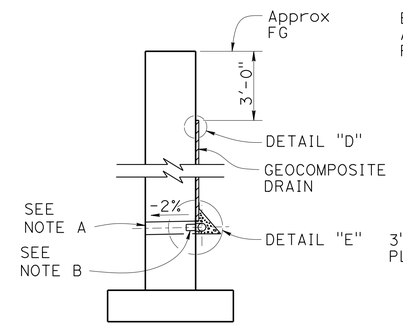

WALL SECTION

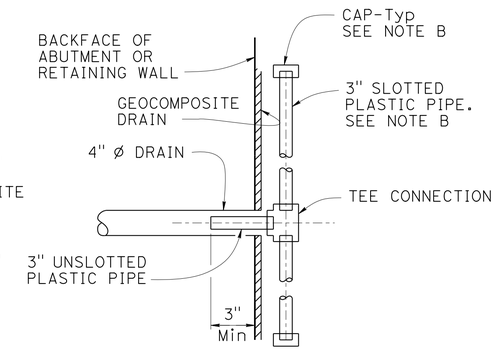

SECTION K-K

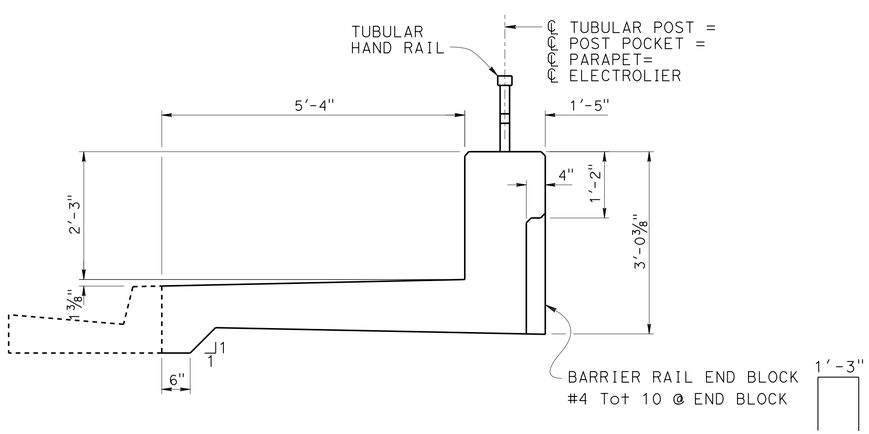

CONCRETE BARRIER TYPE 26A MOD

3/4" = 1'-0" RSP

Note: For details not shown see B11-54

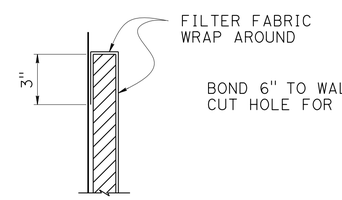

DETAIL "D"

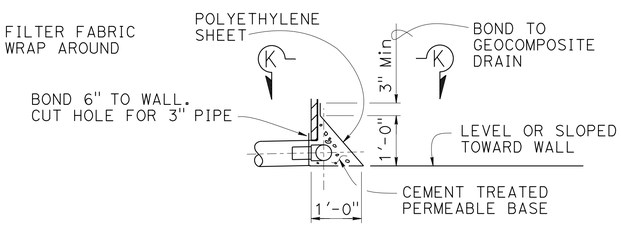

DETAIL "E"

WEEP HOLE AND GEOCOMPOSITE DRAIN

NO SCALE

NOTES: (Geocomposite Drain)

A. 4" ø drains at intermediate sag points and at 25'-0" center to center (9'-0" c-c for Type 3 and 9'-2" c-c for Type 4 retaining walls). For walls adjacent to sidewalks or curbs, provide 4" ø cast iron or asbestos cement pipe under the sidewalk to discharge through curb face. Exposed wall drains shall be located 3" ± above finished grade.

B. Geocomposite drain, cement treated permeable base, and 3" ø slotted plastic pipe continuous behind retaining wall or abutment. Cap ends of pipe. Provide "Tee" connection at each 4" ø drain.

C. Connect the low end of plastic pipe to the main outlet pipe as applicable.

	BY	CHECKED
DESIGN	Yeo Yoon	Ruperd Wilson
DETAILS	Jaime Ramirez	Ruperd Wilson
QUANTITIES	G. Reyes-Gutierrez	Seiji Morimoto

STATE OF CALIFORNIA
DEPARTMENT OF TRANSPORTATION

DIVISION OF ENGINEERING SERVICES
STRUCTURE DESIGN
DESIGN BRANCH 11

BRIDGE NO. RW VA109
POST MILE 1.30

RETAINING WALL VA109
RETAINING WALL DETAILS

STRUCTURES DESIGN DETAIL SHEET (ENGLISH) (REV. 09-01-10)

ORIGINAL SCALE IN INCHES FOR REDUCED PLANS 0 1 2 3

UNIT: 3587
PROJECT NUMBER & PHASE: 0715000160-1
CONTRACT NO.: 07-2159U4

DISREGARD PRINTS BEARING EARLIER REVISION DATES

REVISION DATES: 8-29-11 7-26-13 3-24-13 6-11-13

SHEET 2 OF 5

FILE => rwva109-b-retdt.dgn

USERNAME => s125624 DATE PLOTTED => 28-JAN-2016 TIME PLOTTED => 12:39

DIST	COUNTY	ROUTE	POST MILES TOTAL PROJECT	SHEET No.	TOTAL SHEETS
07	LA,Ora	5	0.0/1.5, 44.3/44.4	1620	1622

William Kemp 3-18-15
REGISTERED CIVIL ENGINEER DATE

1-25-16
PLANS APPROVAL DATE

REGISTERED PROFESSIONAL ENGINEER William D. Kemp No. 55730 Exp. 12/31/16 CIVIL STATE OF CALIFORNIA

The State of California or its officers or agents shall not be responsible for the accuracy or completeness of electronic copies of this plan sheet.

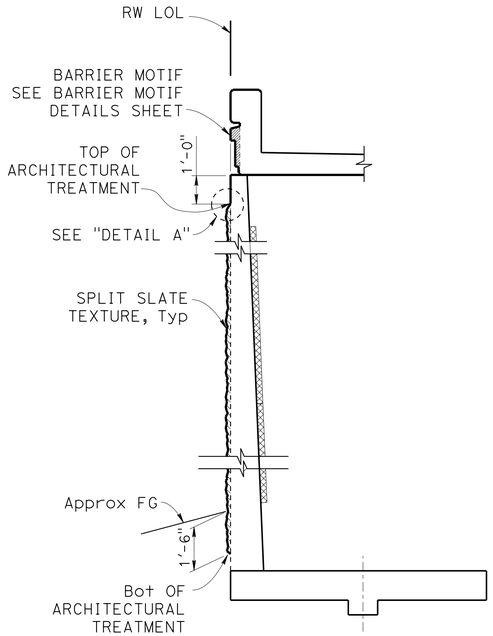

SECTION A-A
NO SCALE

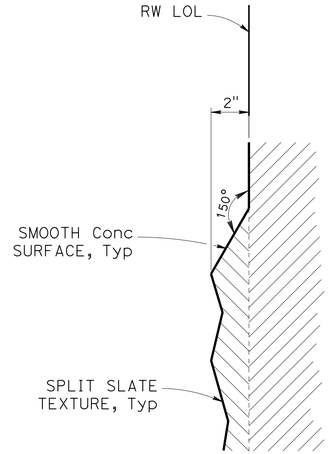

DETAIL A
NO SCALE

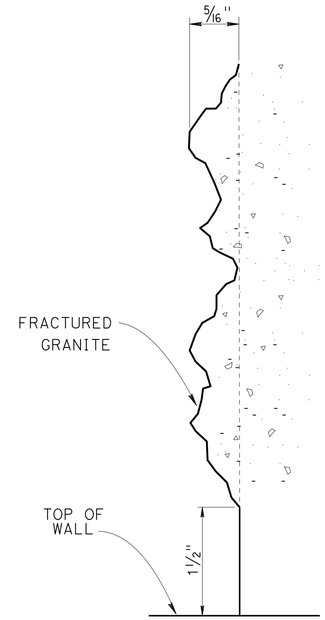

DETAIL E
No Scale

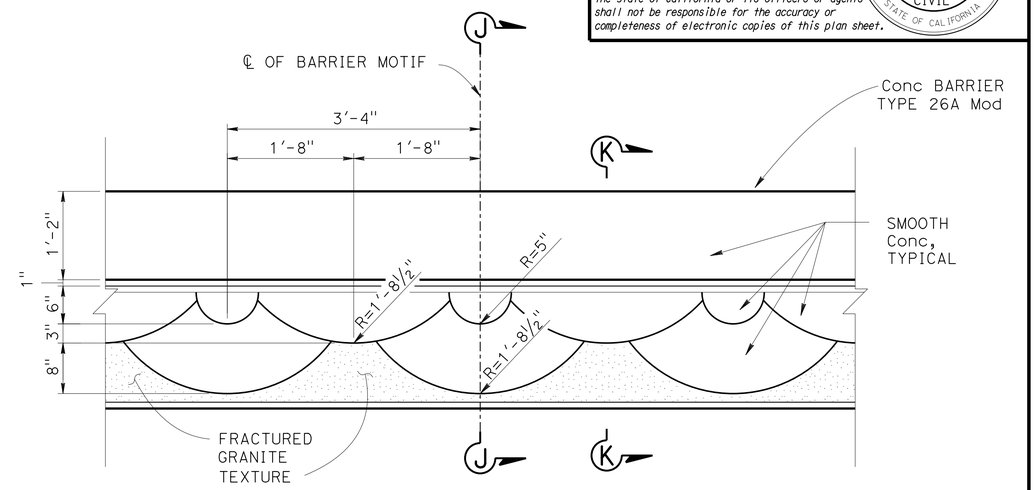

ELEVATION - BARRIER MOTIF
No Scale

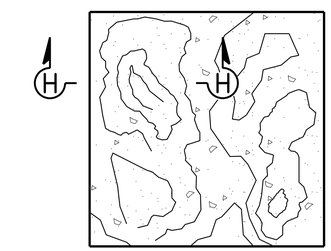

SPLIT SLATE TEXTURE
NO SCALE

NOTE:
All surface relief and texture shall be measured from RW LOL, Typ

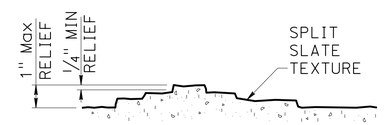

SECTION H-H
NO SCALE

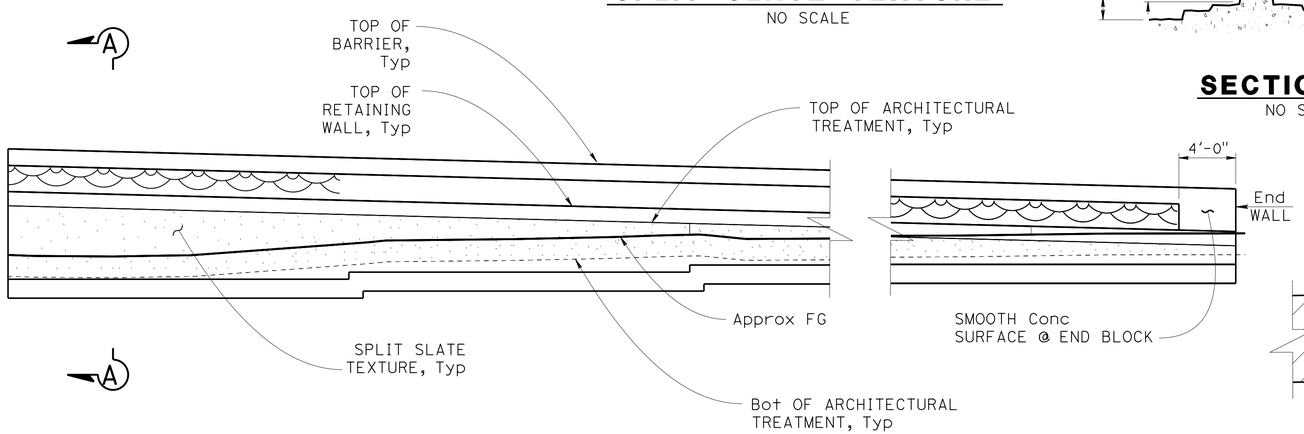

ELEVATION
NO SCALE

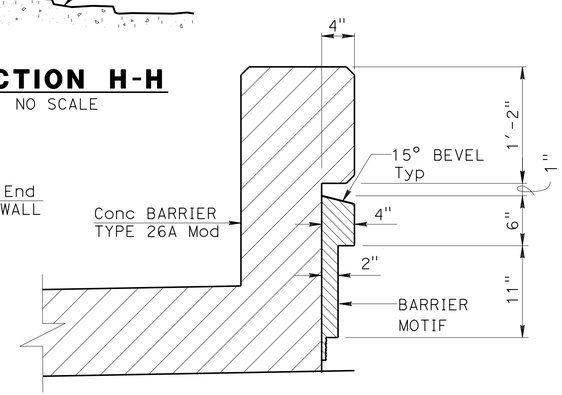

SECTION J-J
No Scale

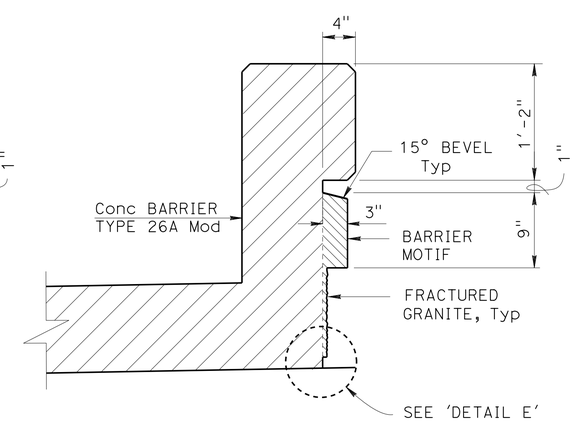

SECTION K-K
No Scale

DESIGN	BY H. Javier Chavez	CHECKED Issac Tasabia	
DETAILS	BY Jaime Ramirez	CHECKED Issac Tasabia	
QUANTITIES	BY G. Reyes-Gutierrez	CHECKED Herman P.	

STATE OF CALIFORNIA
DEPARTMENT OF TRANSPORTATION

DIVISION OF ENGINEERING SERVICES
STRUCTURE DESIGN
DESIGN BRANCH 11

BRIDGE NO. RW VA109
POST MILE 1.30

RETAINING WALL VA109
ARCHITECTURAL TREAMENT DETAILS

STRUCTURES DESIGN DETAIL SHEET (ENGLISH) (REV. 09-01-10)

ORIGINAL SCALE IN INCHES FOR REDUCED PLANS 0 1 2 3

UNIT: 3587
PROJECT NUMBER & PHASE: 0715000160-1 CONTRACT NO.: 07-2159u4

DISREGARD PRINTS BEARING EARLIER REVISION DATES

REVISION DATES 6-8-12 6-21-13 7-26-13 3-21-15 SHEET 3 OF 5

FILE => rwva109-c-arch.dgn

USERNAME => s125624 DATE PLOTTED => 28-JAN-2016 TIME PLOTTED => 12:39

DIST	COUNTY	ROUTE	POST MILES TOTAL PROJECT	SHEET No.	TOTAL SHEETS
07	LA,Ora	5	0.0/1.5, 44.3/44.4	1621	1622

REGISTERED CIVIL ENGINEER 3-18-15 DATE

1-25-16
PLANS APPROVAL DATE

REGISTERED PROFESSIONAL ENGINEER
William D. Kemp
No. 55730
Exp. 12/31/16
CIVIL
STATE OF CALIFORNIA

The State of California or its officers or agents shall not be responsible for the accuracy or completeness of electronic copies of this plan sheet.

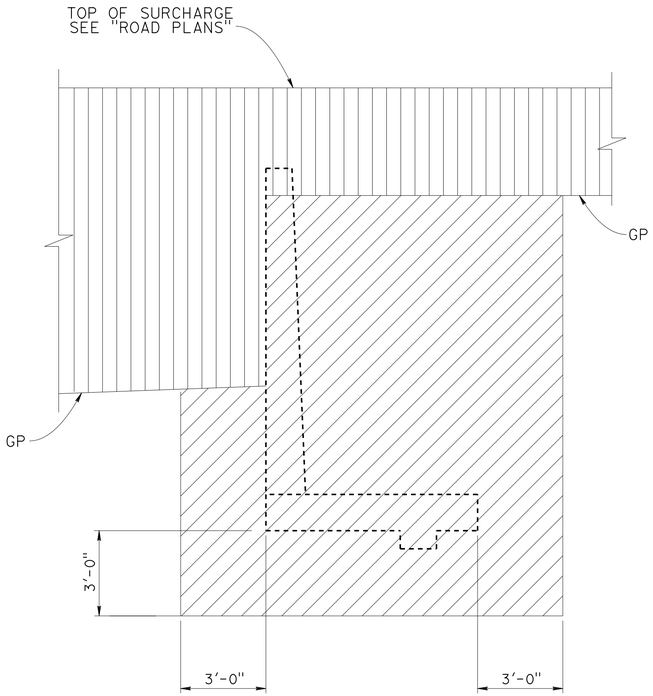

EXCAVATION

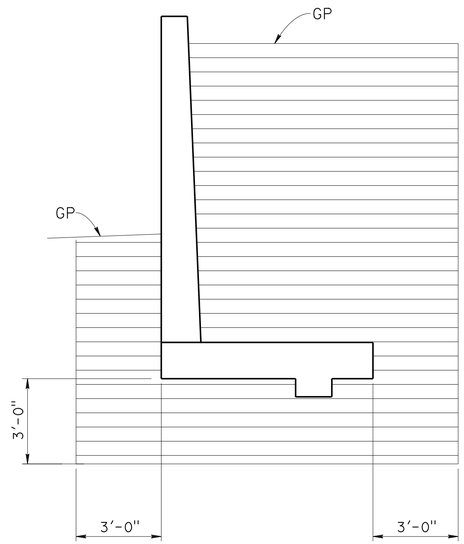

BACKFILL

LEGEND:

STRUCTURE EXCAVATION

ROADWAY EXCAVATION

STRUCTURE BACKFILL

GP - PLANNED GRADING PLANE

LIMITS OF EXCAVATION AND BACKFILL

NO SCALE

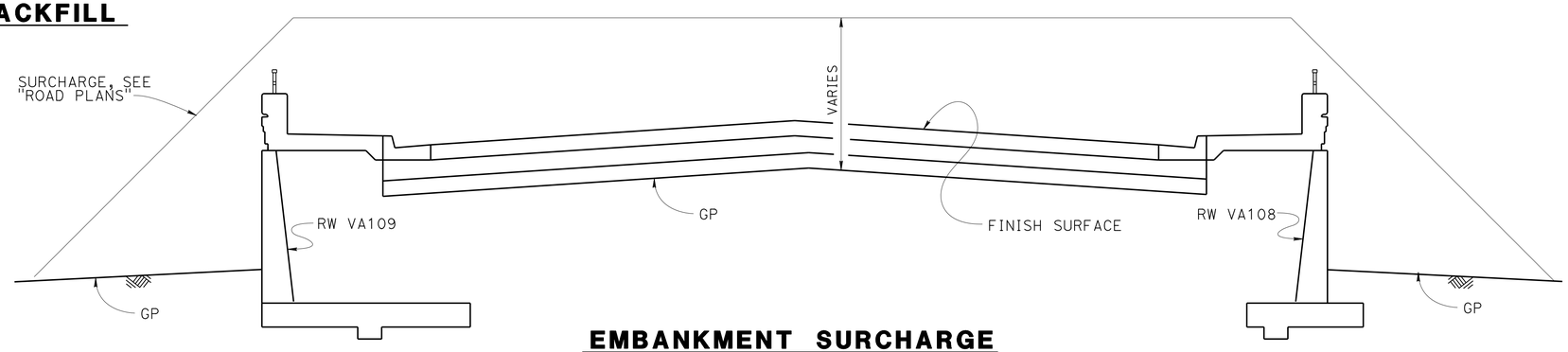

EMBANKMENT SURCHARGE

NO SCALE

DESIGN	BY Yeo Yoon	CHECKED B. Kemp	
DETAILS	BY Jaime Ramirez	CHECKED B. Kemp	
QUANTITIES	BY G. Reyes-Gutierrez	CHECKED Herman P.	

STATE OF CALIFORNIA
DEPARTMENT OF TRANSPORTATION

DIVISION OF ENGINEERING SERVICES
STRUCTURE DESIGN
DESIGN BRANCH 11

BRIDGE NO. RW VA109
POST MILE 1.30

RETAINING WALL VA109
LIMITS OF EXCAVATION AND BACKFILL

STRUCTURES DESIGN DETAIL SHEET (ENGLISH) (REV. 09-01-10)

ORIGINAL SCALE IN INCHES FOR REDUCED PLANS 0 1 2 3

UNIT: 3587
PROJECT NUMBER & PHASE: 0715000160-1
CONTRACT NO.: 07-2159U4

DISREGARD PRINTS BEARING EARLIER REVISION DATES

REVISION DATES 4-25-13

SHEET 4 OF 5

FILE => rwva109-d-exc.dgn

USERNAME => s125624 DATE PLOTTED => 28-JAN-2016 TIME PLOTTED => 12:39

BENCH MARK

GPS 0887
ELEVATION 65.915 FT
FD 2-1/2 CADT DISK IN CONC. CURB
FLUSH, STAMPED "LA-5-1.0, 1995"
LOCATED 90' N OF THE SOUTH SIDE
FIRESTONE BLVD 0.2 MI SE OF VALLEY VIEW
NORTHING 542395.636
EASTING 1997613.893
DATUM NAVD88

DIST	COUNTY	ROUTE	POST MILES TOTAL PROJECT	SHEET No.	TOTAL SHEETS
07	LA,Ora	5	0.0/1.5, 44.3/44.4	1622	1622

REGISTERED CIVIL ENGINEER — DATE 05/20/15

1-25-16
PLANS APPROVAL DATE

URS CORPORATION
2020 EAST FIRST STREET, SUITE 400
SANTA ANA, CA 92705

The State of California or its officers or agents shall not be responsible for the accuracy or completeness of electronic copies of this plan sheet.

REGISTERED PROFESSIONAL ENGINEER — MICHAEL G. SMITH No. 2229 Exp. 03/31/16 GEOTECHNICAL — STATE OF CALIFORNIA

1-This LOTB sheet was prepared in accordance with the Caltrans Soil & Rock Logging, Classification, & Presentation Manual (2010 Edition).

2-For protection of underground utility lines, hand-auger was used to remove top 5 to 10 feet of subsurface material for exploratory borings and Cone Penetration Testings.

3-2.5" to 1.4" blow counts conversion factors for fine-grain and coarse-grain soils have been 0.8 and 0.55, respectively.

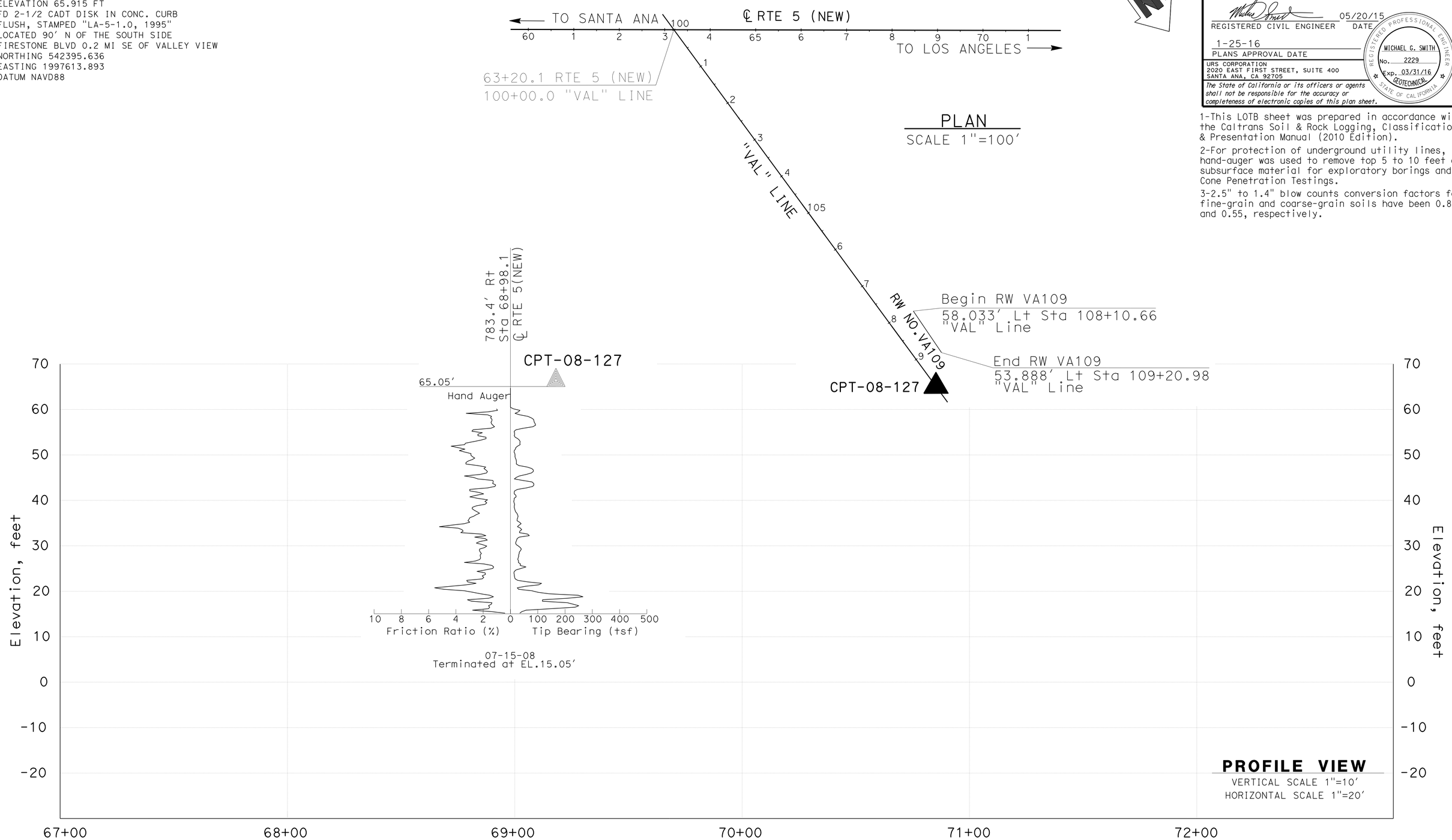

PLAN
SCALE 1"=100'

PROFILE VIEW
VERTICAL SCALE 1"=10'
HORIZONTAL SCALE 1"=20'

F.MOTAMED — DESIGN OVERSIGHT	DRAWN BY	T.PANAH	EJ.JEON — FIELD INVESTIGATION BY:
05/20/15 — SIGN OFF DATE	CHECKED BY	A.GHAZINOOR/L.KHALKHALI	DATE: 07/15/08

PREPARED FOR THE STATE OF CALIFORNIA DEPARTMENT OF TRANSPORTATION

M.G. SMITH — PROJECT ENGINEER

BRIDGE NO. RW VA109
POST MILES 1.30

RETAINING WALL NO. VA109
LOG OF TEST BORINGS SHEET 1 OF 1

GS CIVIL LOG OF TEST BORINGS SHEET (ENGLISH) (REV. 03/14/12)

ORIGINAL SCALE IN INCHES FOR REDUCED PLANS 0 1 2 3

UNIT: 3658
PROJECT NUMBER & PHASE: 07150001601
CONTRACT NO.: 07-2159U4

DISREGARD PRINTS BEARING EARLIER REVISION DATES

REVISION DATES 5/12/15 — SHEET 5 OF 5

FILE => rwva109-z-lotb.dgn

USERNAME => s125624 DATE PLOTTED => 28-JAN-2016 TIME PLOTTED => 12:39