DIST	COUNTY	ROUTE	POST MILES TOTAL PROJECT	SHEET No.	TOTAL SHEETS
04	Ala	13	8.3	101	108

REGISTERED CIVIL ENGINEER 7-23-15 DATE

PAO-TSAN WANG No. 32308 Exp. 12-31-16 CIVIL — REGISTERED PROFESSIONAL ENGINEER — STATE OF CALIFORNIA

10-19-15
PLANS APPROVAL DATE

The State of California or its officers or agents shall not be responsible for the accuracy or completeness of electronic copies of this plan sheet.

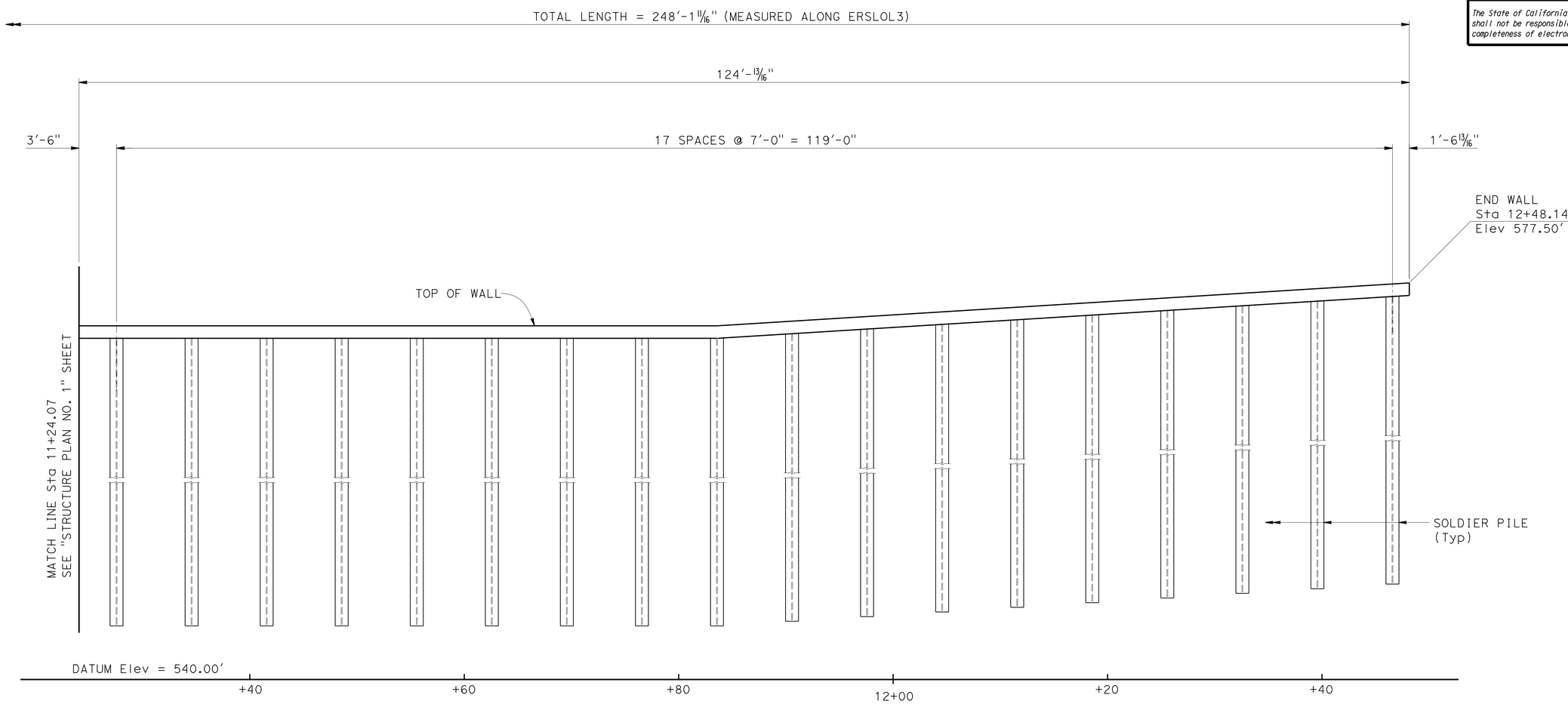

STATION	TOP WALL Elev (ft)
11+24.07	573.00
11+40	571.86
11+60	572.81
11+80	572.97
11+83.57	573.00
12+00	574.15
12+20	575.54
12+40	576.93
12+48.14	577.50

MIRRORED ELEVATION

3/16" = 1'-0"

19	20	21	22	23	24	25	26	27	28	29	30	31	32	33	34	35	36	PILE NUMBER
45	45	45	45	45	45	45	45	45	45	45	45	45	45	45	45	45	45	PILE LENGTH (ft)

THORNHILL DRIVE STORM DAMAGE REPAIR

SOLDIER PILE WALL

STRUCTURE PLAN NO. 2

DESIGN	BY P. Wang	CHECKED Tin Win	
DETAILS	BY Min Yu	CHECKED Tin Win	
QUANTITIES	BY S. Kotalawala	CHECKED Tin Win	

STATE OF CALIFORNIA
DEPARTMENT OF TRANSPORTATION

DIVISION OF ENGINEERING SERVICES
STRUCTURE DESIGN
DESIGN BRANCH 16

BRIDGE NO. 33E0142
POST MILE 8.3

STRUCTURES DESIGN DETAIL SHEET (ENGLISH) (REV. 09-01-10)

ORIGINAL SCALE IN INCHES FOR REDUCED PLANS 0 1 2 3

UNIT: 3617
PROJECT NUMBER & PHASE: 04000208681
CONTRACT NO.: 04-1SS024

DISREGARD PRINTS BEARING EARLIER REVISION DATES

REVISION DATES: 07-24-13 01-29-14 07-15-15

SHEET 4 OF 11

FILE => 33e0142-c-sp02.dgn

USERNAME => s126849 DATE PLOTTED => 19-OCT-2015 TIME PLOTTED => 16:08

DIST	COUNTY	ROUTE	POST MILES TOTAL PROJECT	SHEET No.	TOTAL SHEETS
04	Ala	13	8.3	102	108

REGISTERED CIVIL ENGINEER 7-23-15 DATE

10-19-15
PLANS APPROVAL DATE

REGISTERED PROFESSIONAL ENGINEER PAO-TSAN WANG No. 32308 Exp. 12-31-16 CIVIL STATE OF CALIFORNIA

The State of California or its officers or agents shall not be responsible for the accuracy or completeness of electronic copies of this plan sheet.

CURVE DATA

No.	R	Δ	T	L
Ⓐ	4000.00	2°15′27"	78.81	157.60
Ⓑ	3000.00	1°38′53"	43.15	86.29

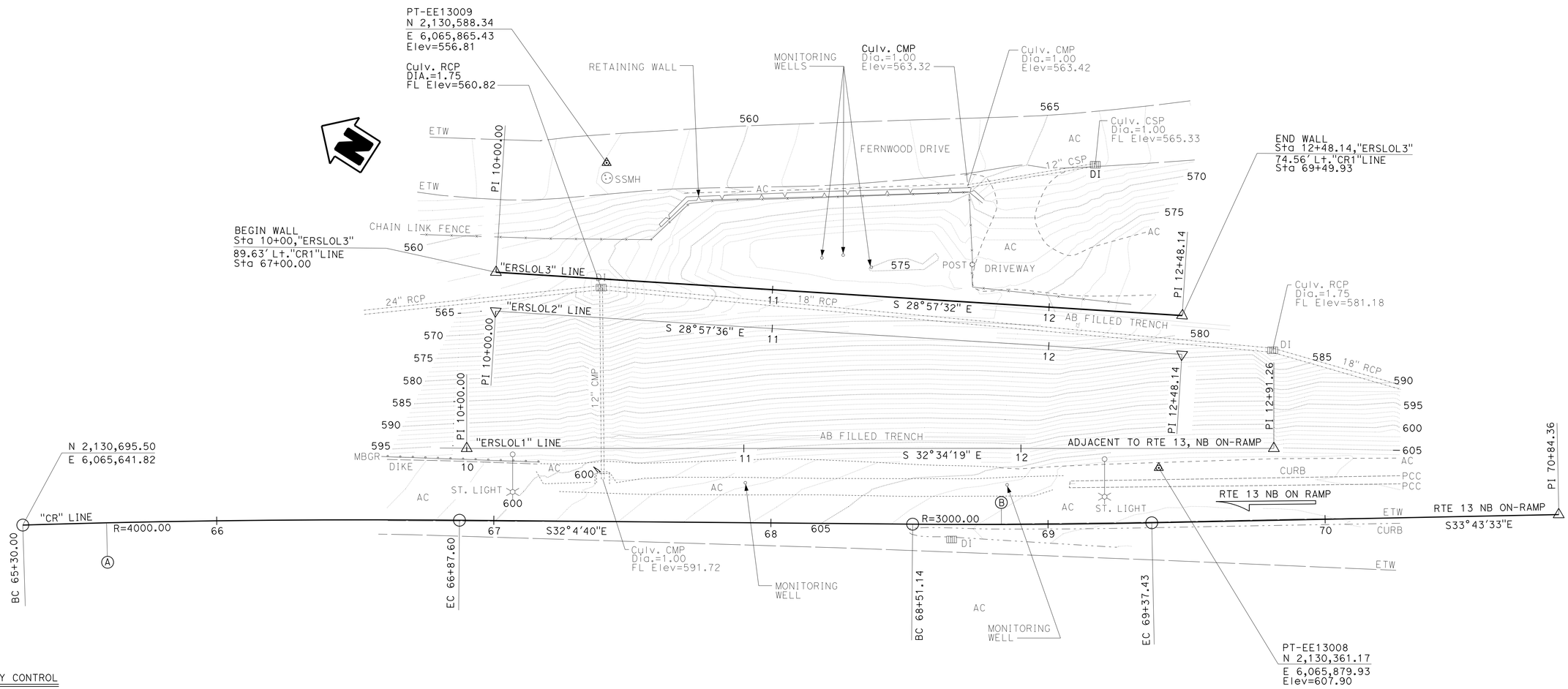

SURVEY CONTROL

PT-EE13008
Fnd PK w/ SHINER ON RAMP SHOULDER
19.79 FT Lt. "CR" LINE
Sta. 69+40.36
N 2130361.17
E 6065879.93
Elev=607.90

PT-EE13009
Fnd PIN IN MONUMENT WELL
129.46 FT Lt. "CR" LINE
Sta. 67+39.59
N 2130588.34
E 6065865.43
Elev=556.81

THORNHILL DRIVE STORM DAMAGE REPAIR

SOLDIER PILE WALL FOUNDATION PLAN

PRELIMINARY INVESTIGATION SECTION

SCALE 1"=20'	VERT.DATUM NAVD88	PHOTOGRAMMETRY AS OF: X		
	HORZ.DATUM NAD83	SURVEYED	BY X	CHECKED BY Chris Fassett 02/2013
ALIGNMENT TIES Dist. Traverse Sheet		DRAFTED	BY Sharon Zheng 02/2013	CHECKED BY Sang Sou 02/2013

DESIGN	BY P.Wang	CHECKED Tin Win	
DETAILS	BY Min Yu	CHECKED Tin Win	
QUANTITIES	BY S. Kotalawala	CHECKED Tin Win	

STATE OF CALIFORNIA
DEPARTMENT OF TRANSPORTATION

DIVISION OF ENGINEERING SERVICES
STRUCTURE DESIGN
DESIGN BRANCH 16

BRIDGE NO. 33E0142
POST MILE 8.30

STRUCTURES FOUNDATION PLAN SHEET (ENGLISH) (REV. 09-01-10)

ORIGINAL SCALE IN INCHES FOR REDUCED PLANS 0 1 2 3

UNIT: 3646
PROJECT NUMBER & PHASE: 04000208681
CONTRACT NO.: 04-1SS024

DISREGARD PRINTS BEARING EARLIER REVISION DATES

REVISION DATES: 01-21-14 01-29-14 07-15-15

SHEET 5 OF 11

FILE => 33e0142-e-fp101.dgn

USERNAME => s126849 DATE PLOTTED => 19-OCT-2015 TIME PLOTTED => 16:08

DIST	COUNTY	ROUTE	POST MILES TOTAL PROJECT	SHEET No.	TOTAL SHEETS
04	Ala	13	8.3	103	108

REGISTERED CIVIL ENGINEER 7-23-15 DATE

PAO-TSAN WANG No. 32308 Exp. 12-31-16 CIVIL — REGISTERED PROFESSIONAL ENGINEER — STATE OF CALIFORNIA

10-19-15
PLANS APPROVAL DATE

The State of California or its officers or agents shall not be responsible for the accuracy or completeness of electronic copies of this plan sheet.

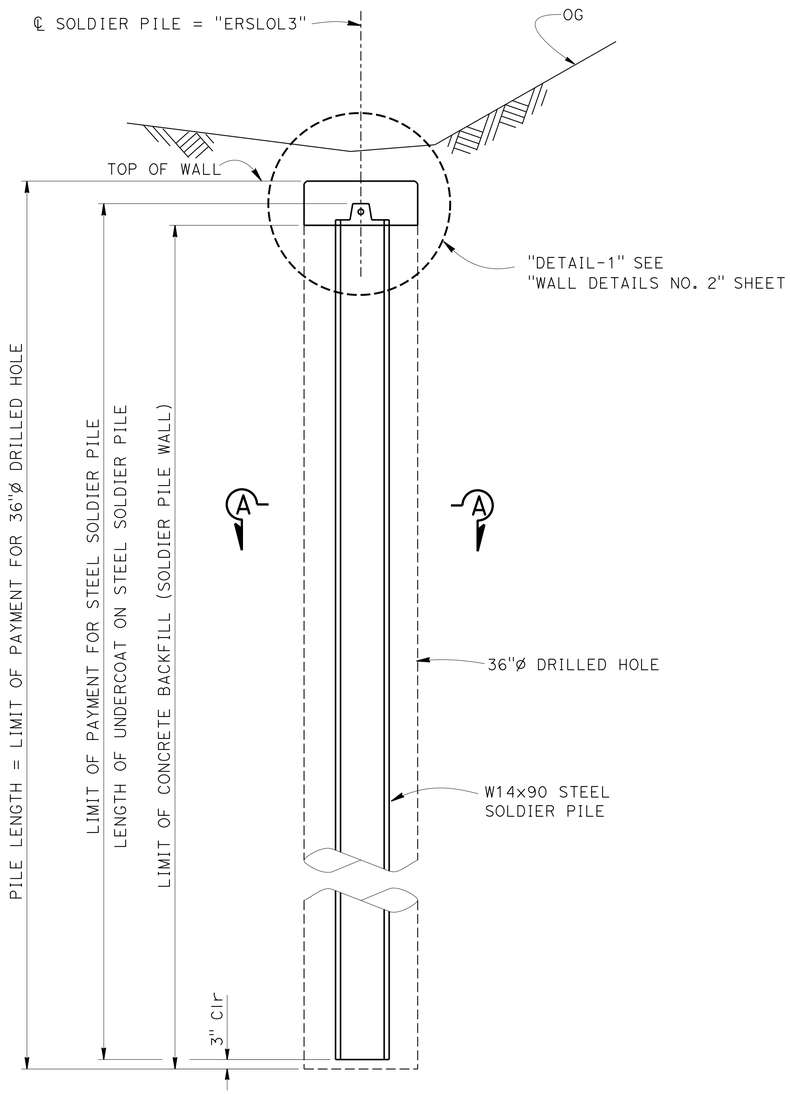

TYPICAL SECTION
½" = 1'-0"

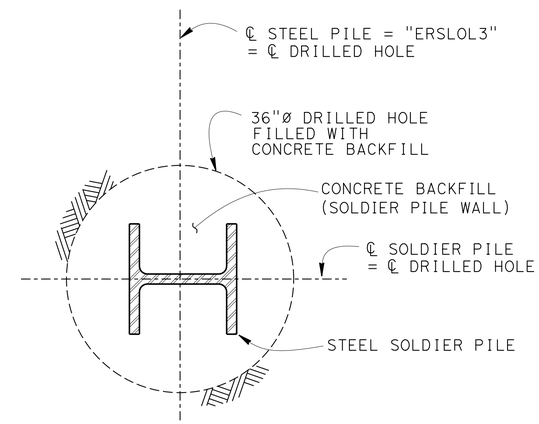

SECTION A-A
1" = 1'-0"

THORNHILL DRIVE STORM DAMAGE REPAIR

SOLDIER PILE WALL

WALL DETAILS NO.1

DESIGN	BY P. Wang	CHECKED Tin Win	
DETAILS	BY T. Cotton / Min Yu	CHECKED Tin Win	
QUANTITIES	BY S. Kotalawala	CHECKED Tin Win	

STATE OF CALIFORNIA
DEPARTMENT OF TRANSPORTATION

DIVISION OF ENGINEERING SERVICES
STRUCTURE DESIGN
DESIGN BRANCH 16

BRIDGE NO. 33E0142
POST MILE 8.3

STRUCTURES DESIGN DETAIL SHEET (ENGLISH) (REV. 09-01-10)

ORIGINAL SCALE IN INCHES FOR REDUCED PLANS 0 1 2 3

UNIT: 3617
PROJECT NUMBER & PHASE: 04000208681
CONTRACT NO.: 04-1SS024

DISREGARD PRINTS BEARING EARLIER REVISION DATES

REVISION DATES: ~~01-21-14~~ ~~01-29-14~~ 07-15-15

SHEET 6 OF 11

FILE => 33e0142-g-rwdt01.dgn

USERNAME => s128849 DATE PLOTTED => 19-OCT-2015 TIME PLOTTED => 16:08

DIST	COUNTY	ROUTE	POST MILES TOTAL PROJECT	SHEET No.	TOTAL SHEETS
04	Ala	13	8.3	104	108

REGISTERED CIVIL ENGINEER 7-23-15 DATE

10-19-15
PLANS APPROVAL DATE

REGISTERED PROFESSIONAL ENGINEER PAO-TSAN WANG No. 32308 Exp. 12-31-16 CIVIL STATE OF CALIFORNIA

The State of California or its officers or agents shall not be responsible for the accuracy or completeness of electronic copies of this plan sheet.

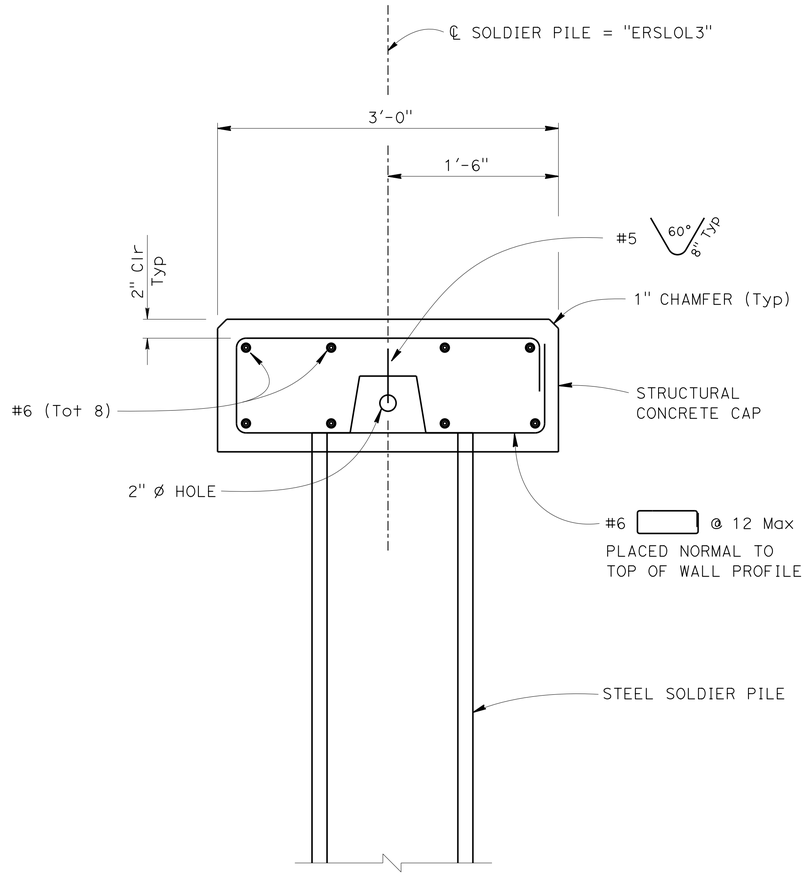

DETAIL-1

STRUCTURAL CONCRETE CAP DETAILS

1½" = 1'-0"

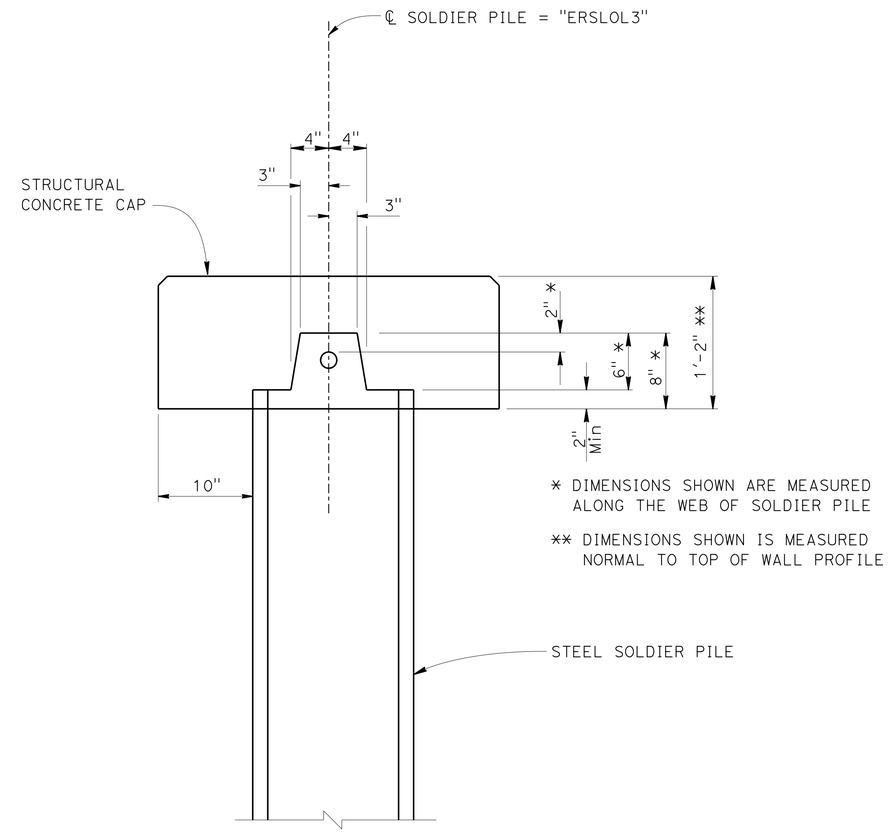

* DIMENSIONS SHOWN ARE MEASURED ALONG THE WEB OF SOLDIER PILE

** DIMENSIONS SHOWN IS MEASURED NORMAL TO TOP OF WALL PROFILE

STEEL SOLDIER PILE DETAILS

1½" = 1'-0"

THORNHILL DRIVE STORM DAMAGE REPAIR

SOLDIER PILE WALL

WALL DETAILS NO. 2

	BY	CHECKED
DESIGN	P. Wang	Tin Win
DETAILS	Min Yu	Tin Win
QUANTITIES	S. Kotalawala	Tin Win

STATE OF CALIFORNIA
DEPARTMENT OF TRANSPORTATION

DIVISION OF ENGINEERING SERVICES
STRUCTURE DESIGN
DESIGN BRANCH 16

BRIDGE NO. 33E0142
POST MILE 8.3

STRUCTURES DESIGN DETAIL SHEET (ENGLISH) (REV. 09-01-10)

ORIGINAL SCALE IN INCHES FOR REDUCED PLANS 0 1 2 3

UNIT: 3617
PROJECT NUMBER & PHASE: 04000208681
CONTRACT NO.: 04-1SS024

DISREGARD PRINTS BEARING EARLIER REVISION DATES → 01-29-14 01-21-14 07-15-15

SHEET 7 OF 11

FILE => 33e0142-g-rwdt02.dgn

USERNAME => s126849 DATE PLOTTED => 19-OCT-2015 TIME PLOTTED => 16:08

DIST.	COUNTY	ROUTE	POST MILES TOTAL PROJECT	SHEET NO.	TOTAL SHEETS
04	Ala	13	8.3	105	108

REGISTERED ENGINEER - CIVIL 01-23-13

10-19-15
PLANS APPROVAL DATE

REGISTERED PROFESSIONAL ENGINEER EDUARDO ORTEGA No. 41012 Exp. 03-31-13 CIVIL STATE OF CALIFORNIA

The State of California or its officers or agents shall not be responsible for the accuracy or completeness of electronic copies of this plan sheet.

Caltrans now has a web site! To get to the web site, go to: http://www.dot.ca.gov

BENCH MARK

PRHV89 CTRL MONUMENT HORIZ. & VERT.
Offset 23.42 Lt. Sta. 68+20.79
N. 2,130,463.221 E. 6,065,818.707

NOTE: PP=unconfined compressive strength (tsf) as measured by pocket penetrometer.

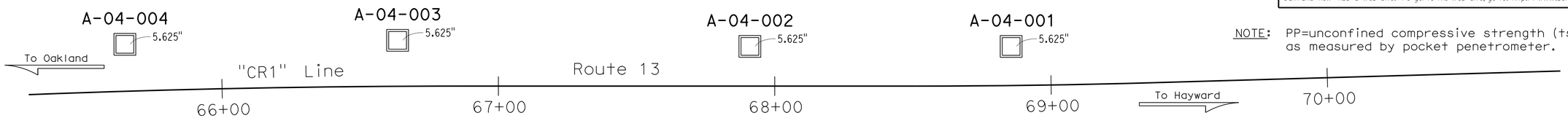

PLAN

1"=20'

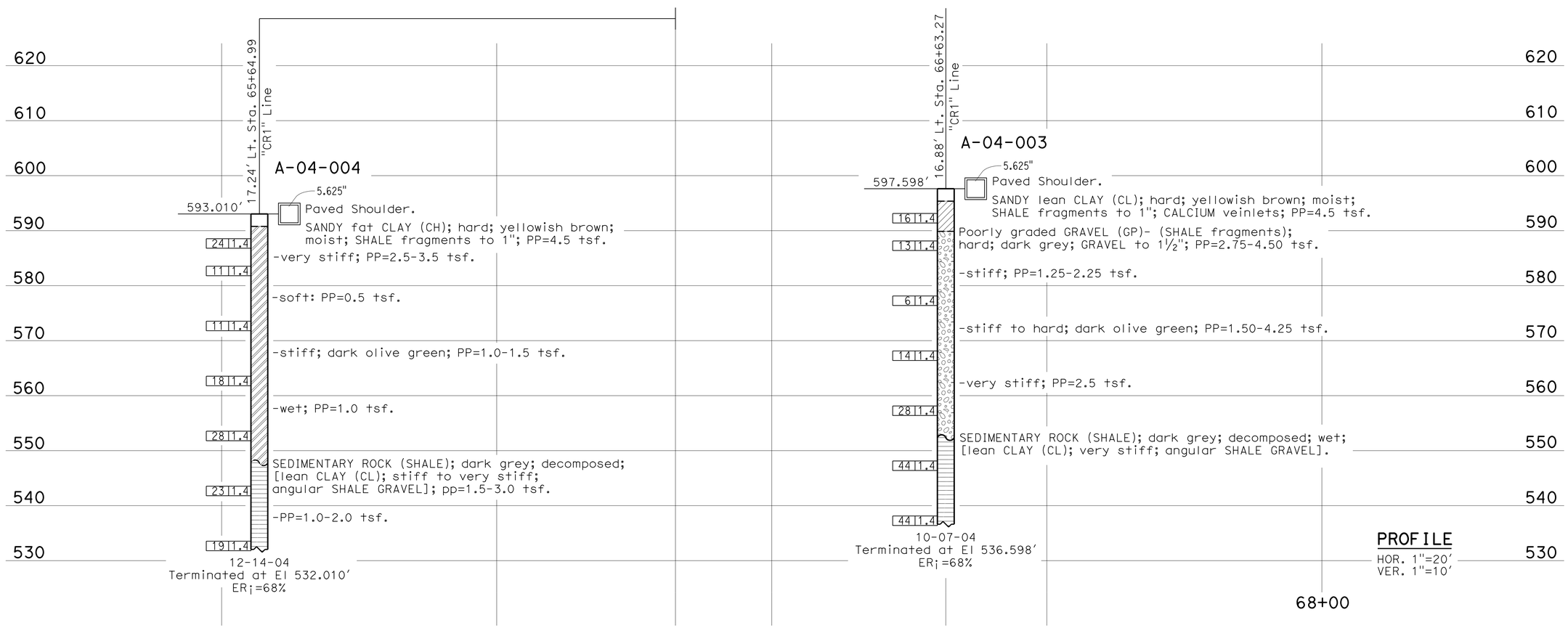

PROFILE

HOR. 1"=20'
VER. 1"=10'

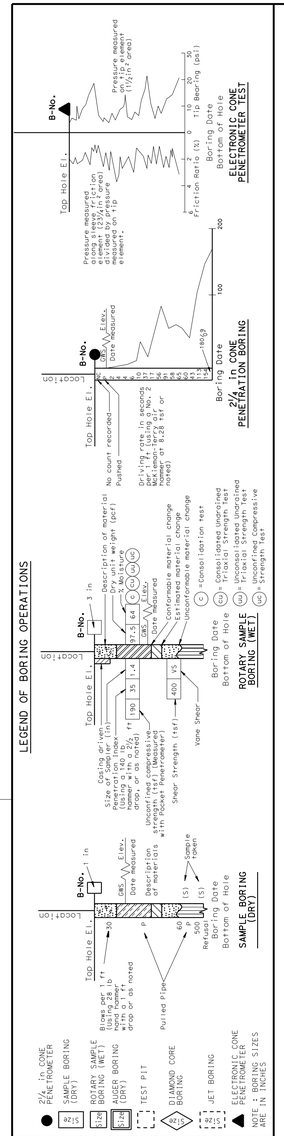

DIVISION OF ENGINEERING SERVICES		FIELD INVESTIGATION BY:	STATE OF CALIFORNIA DEPARTMENT OF TRANSPORTATION	GEOTECHNICAL SERVICES OFFICE OF GEOTECHNICAL DESIGN - WEST	BRIDGE NO. 33E0142	THORNHILL DRIVE STORM DAMAGE REPAIR
DRAWN BY	M. REYNOLDS 08/12	E. Ortega			POST MILE 8.3	LOG OF TEST BORINGS 1 OF 4
CHECKED BY	R. Nashed					

(Orig 01/02)
(Rev 09/12)

ORIGINAL SCALE IN MILLIMETERS FOR REDUCED PLANS 0 10 20 30 40 50 60 70 80 90 100

UNIT: 3660
EA 04-1SS024

DISREGARD PRINTS BEARING EARLIER REVISION DATES 01-30-13

REVISION DATES (PRELIMINARY STAGE ONLY) SHEET 8 OF 11

USERNAME => s126849
DGN FILE => 33e0142-z-ltb01.dgn

DATE PLOTTED => 19-OCT-2015
TIME PLOTTED => 16:08

DIST.	COUNTY	ROUTE	POST MILES TOTAL PROJECT	SHEET NO.	TOTAL SHEETS
04	Ala	13	8.3	106	108

REGISTERED ENGINEER - CIVIL 01-23-13

PLANS APPROVAL DATE 10-19-15

REGISTERED PROFESSIONAL ENGINEER EDUARDO ORTEGA No. 41012 Exp. 03-31-13 CIVIL STATE OF CALIFORNIA

The State of California or its officers or agents shall not be responsible for the accuracy or completeness of electronic copies of this plan sheet.

Caltrans now has a web site! To get to the web site, go to: http://www.dot.ca.gov

(FOR BORING LOCATION SEE PLAN, LOTB SHEET 1 OF 2)

NOTE: PP=unconfined compressive strength (tsf) as measured by pocket penetrometer.

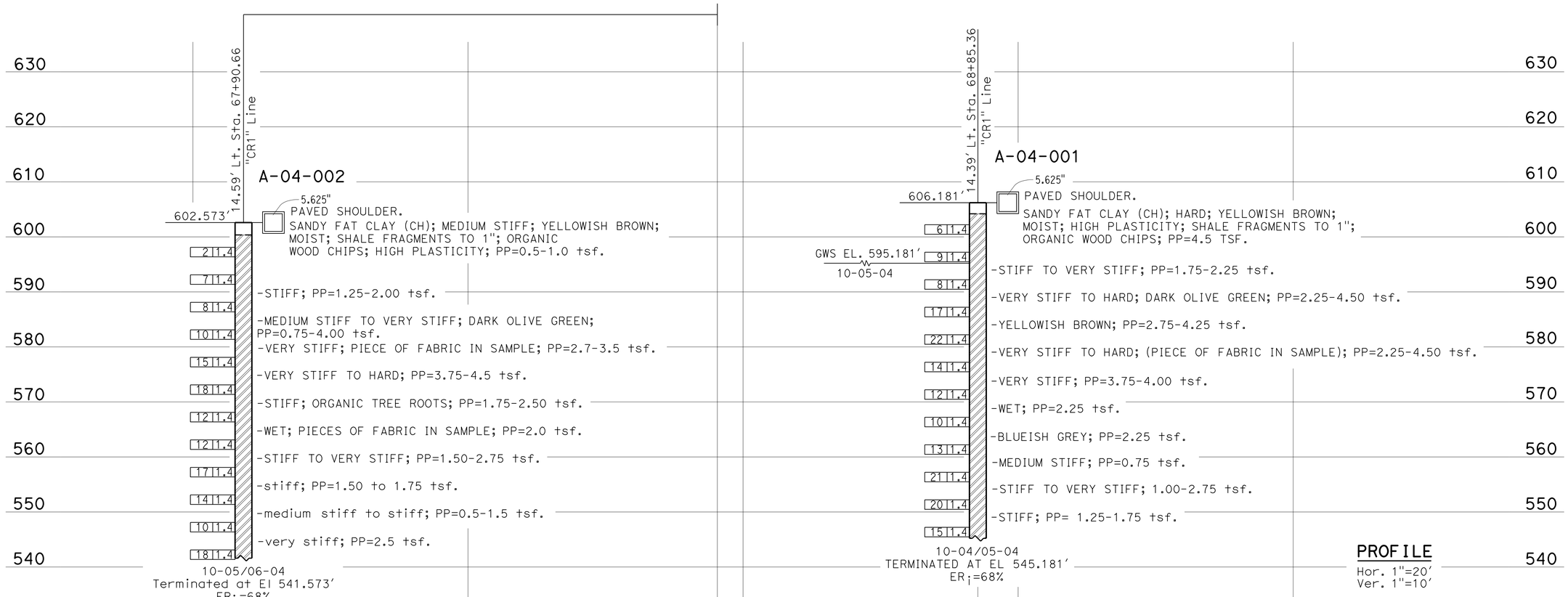

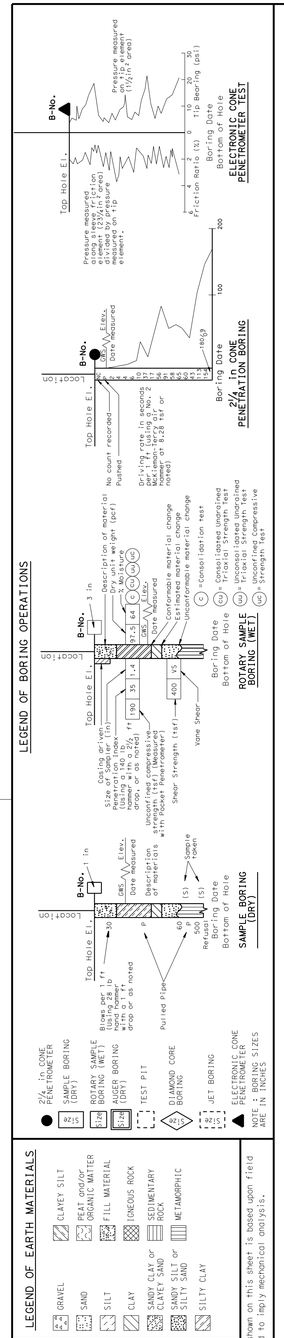

DIVISION OF ENGINEERING SERVICES	
DRAWN BY	M. REYNOLDS 08/12
CHECKED BY	R. Nashed

FIELD INVESTIGATION BY: E. Ortega

STATE OF CALIFORNIA DEPARTMENT OF TRANSPORTATION

GEOTECHNICAL SERVICES OFFICE OF GEOTECHNICAL DESIGN - WEST

BRIDGE NO. 33E0142

POST MILE 8.3

THORNHILLDRIVE STORM DAMAGE REPAIR

LOG OF TEST BORINGS 2 OF 4

(Orig 01/02) (Rev 09/12)

ORIGINAL SCALE IN MILLIMETERS FOR REDUCED PLANS 0 10 20 30 40 50 60 70 80 90 100

UNIT: 3660
EA 04-1SS024

DISREGARD PRINTS BEARING EARLIER REVISION DATES 01-30-13

REVISION DATES (PRELIMINARY STAGE ONLY)

SHEET 9 OF 11

DATE PLOTTED => 19-OCT-2015
TIME PLOTTED => 16:08

USERNAME => s126849
DGN FILE => 33e0142-z-ltb02.dgn

DIST	COUNTY	ROUTE	POST MILES TOTAL PROJECT	SHEET No	TOTAL SHEETS
04	Ala	13	8.3	107	108

REGISTERED CIVIL ENGINEER 01-23-13

10-19-15
PLANS APPROVAL DATE

REGISTERED PROFESSIONAL ENGINEER
EDUARDO ORTEGA
No. 41012
Exp. 03-31-13
CIVIL
STATE OF CALIFORNIA

The State of California or its officers or agents shall not be responsible for the accuracy or completeness of electronic copies of this plan sheet.

This LOTB sheet was prepared in accordance with the Caltrans Soil & Rock Logging, Classification, & Presentation Manual (2010 Edition).

BENCH MARK

PRHV89 CTRL MONUMENT HORIZ. & VERT.
Offset 23.42 Lt. Sta. 68+20.79
N. 2,130,463.221 E. 6,065,818.707

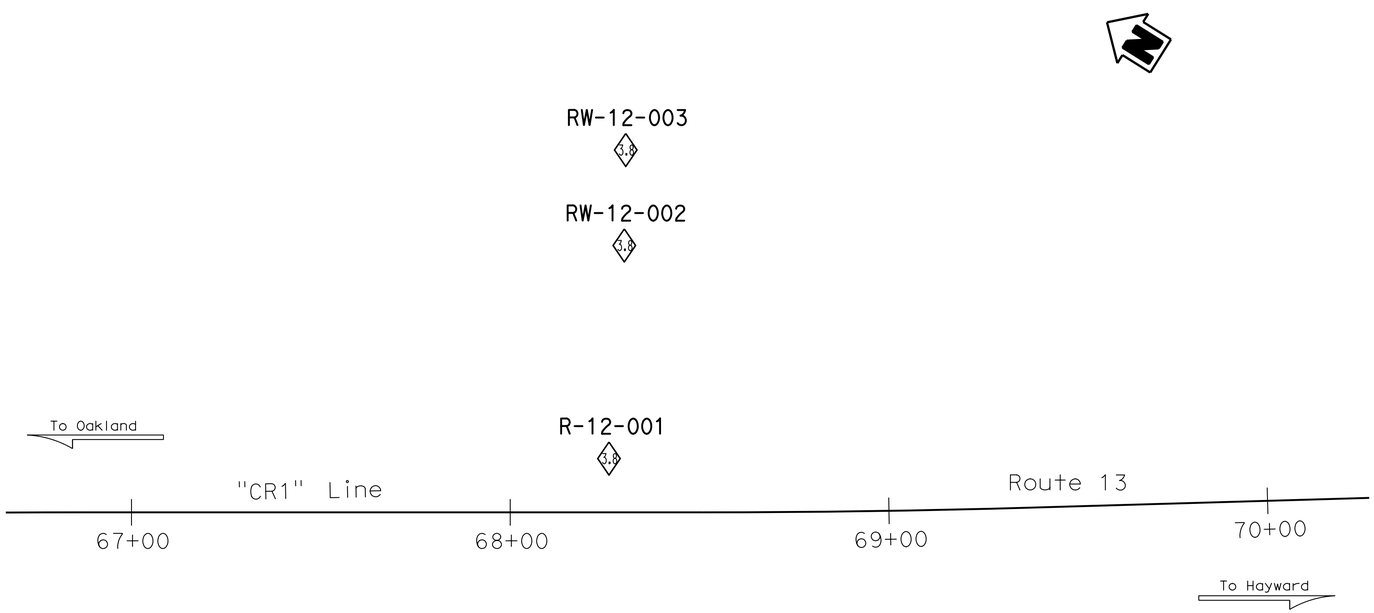

PLAN
1"=20'

NOTE: PP=unconfined compressive strength (tsf) as measured by pocket penetrometer.

PROFILE
HOR. 1"=20'
VER. 1"= 5'

ENGINEERING SERVICES		GEOTECHNICAL SERVICES	STATE OF CALIFORNIA DEPARTMENT OF TRANSPORTATION	DIVISION OF ENGINEERING SERVICES OFFICE OF GEOTECHNICAL DESIGN BRANCH	BRIDGE NO. 33E0142 POST MILES 8.3	THORNHILL DRIVE STORM DAMAGE REPAIR
FUNCTIONAL SUPERVISOR	DRAWN BY: M. Reynolds	FIELD INVESTIGATION BY:				LOG OF TEST BORINGS 3 OF 4
NAME: M. Momenzadeh	CHECKED BY: R. Nashed	E. Ortega				

OGS CIVIL LOG OF TEST BORINGS SHEET

ORIGINAL SCALE IN INCHES FOR REDUCED PLANS 0 1 2 3

UNIT: 3660
PROJECT NUMBER & PHASE: 040002086801 CONTRACT NO.: 04-1SS024

DISREGARD PRINTS BEARING EARLIER REVISION DATES

REVISION DATES 01-30-13

SHEET 10 OF 11

FILE => 33e0142-z-1tb03.dgn

USERNAME => s126849 DATE PLOTTED => 19-OCT-2015 TIME PLOTTED => 16:08

DIST	COUNTY	ROUTE	POST MILES TOTAL PROJECT	SHEET No	TOTAL SHEETS
04	Ala	13	8.3	108	108

Ed Ortega Jr. 01-23-13
REGISTERED CIVIL ENGINEER

10-19-15
PLANS APPROVAL DATE

REGISTERED PROFESSIONAL ENGINEER
EDUARDO ORTEGA
No. 41012
Exp. 03-31-13
CIVIL
STATE OF CALIFORNIA

The State of California or its officers or agents shall not be responsible for the accuracy or completeness of electronic copies of this plan sheet.

This LOTB sheet was prepared in accordance with the Caltrans Soil & Rock Logging, Classification, & Presentation Manual (2010 Edition).

NOTE: 1. PP=unconfined compressive strength (tsf) as measured by pocket penetrometer.

2. *NR: Not Recorded.

(For Boring Location See Plan, LOTB Sheet 1 of 2)

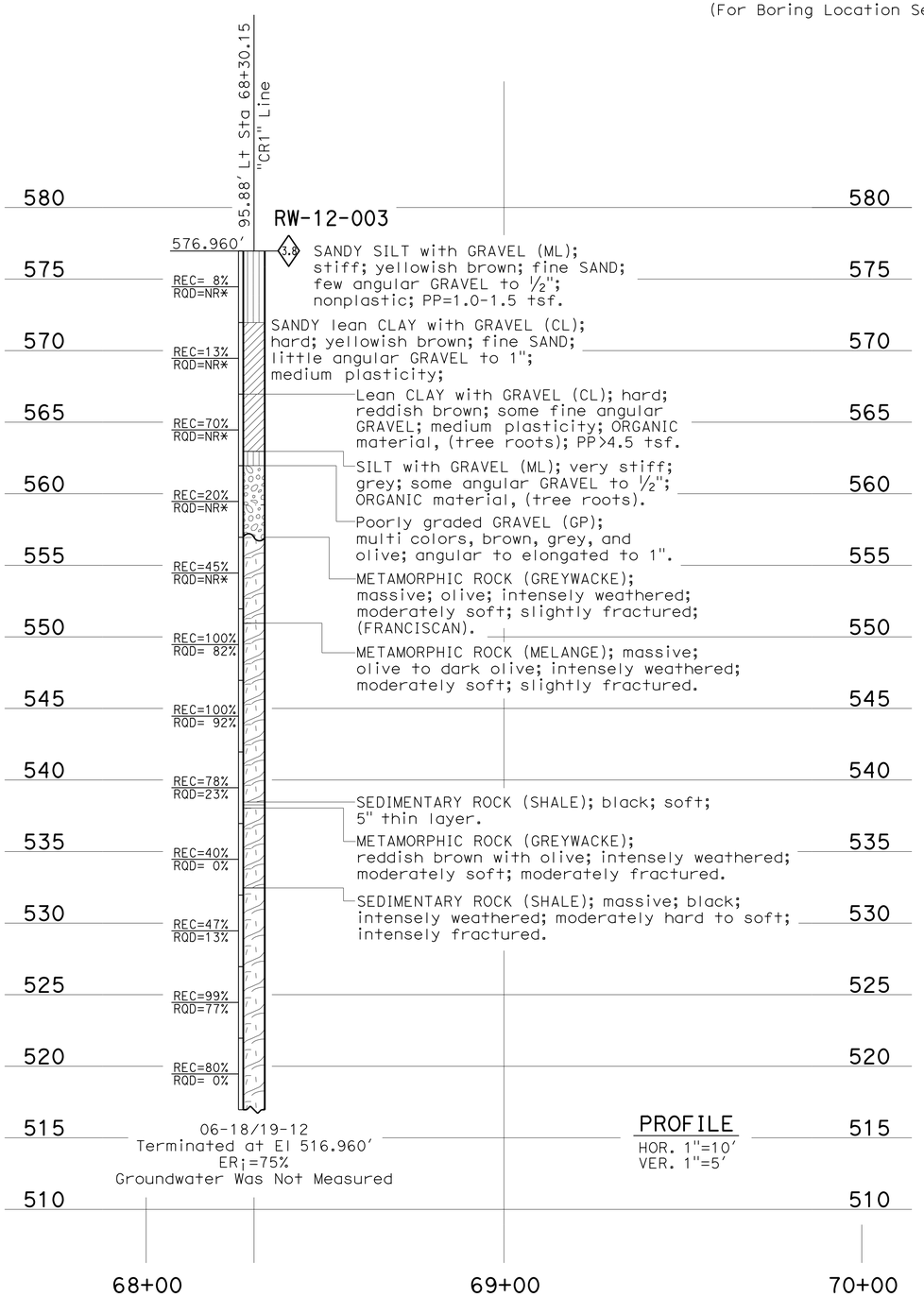

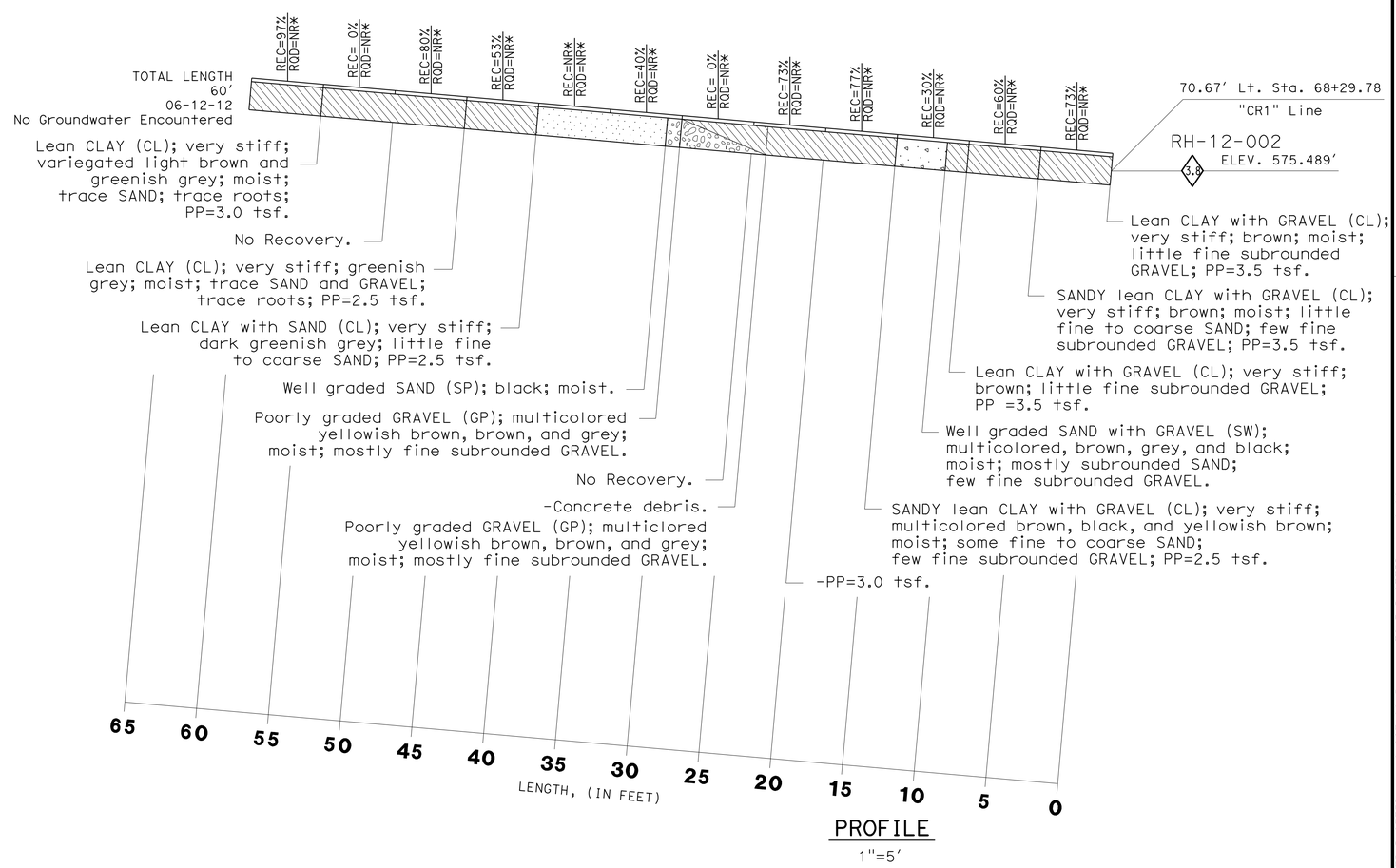

ENGINEERING SERVICES		GEOTECHNICAL SERVICES	STATE OF CALIFORNIA DEPARTMENT OF TRANSPORTATION	DIVISION OF ENGINEERING SERVICES OFFICE OF GEOTECHNICAL DESIGN BRANCH	BRIDGE NO. 33E0142 POST MILES 8.3	THORNHILL DRIVE STORM DAMAGE REPAIR
FUNCTIONAL SUPERVISOR	DRAWN BY: M. Reynolds	FIELD INVESTIGATION BY: R. Nashed				LOG OF TEST BORINGS 4 OF 4
NAME: M. Momenzadeh	CHECKED BY: R. Nashed					

OGS CIVIL LOG OF TEST BORINGS SHEET

ORIGINAL SCALE IN INCHES FOR REDUCED PLANS 0 1 2 3

UNIT: 3660
PROJECT NUMBER & PHASE: 040002086801 CONTRACT NO.: 04-1SS024

DISREGARD PRINTS BEARING EARLIER REVISION DATES

REVISION DATES: 01-30-13

SHEET 11 OF 11

FILE => 33e0142-z-1tb04.dgn

USERNAME => s126849 DATE PLOTTED => 19-OCT-2015 TIME PLOTTED => 16:08