Dist	COUNTY	ROUTE	POST MILES TOTAL PROJECT	SHEET No.	TOTAL SHEETS
02	Las	395	R24.7/36.4	1	24

STATE OF CALIFORNIA

DEPARTMENT OF TRANSPORTATION

ACSTPNH-P395(251)E

PROJECT PLANS FOR CONSTRUCTION ON

STATE HIGHWAY

IN LASSEN COUNTY NEAR DOYLE FROM WILLOW RANCH CREEK BRIDGE TO 2.9 MILES SOUTH OF MILFORD GRADE ROAD

TO BE SUPPLEMENTED BY STANDARD PLANS DATED MAY 2010

INDEX OF PLANS

SHEET No.	DESCRIPTION
1	TITLE AND LOCATION MAP
2	TYPICAL CROSS SECTIONS
3-8	CONSTRUCTION DETAILS
9	CONSTRUCTION AREA SIGNS
10	PAVEMENT DELINEATION DETAILS
11	PAVEMENT DELINEATION QUANTITIES
12-13	SUMMARY OF QUANTITIES
14-24	REVISED STANDARD PLANS

THE STANDARD PLANS LIST APPLICABLE TO THIS CONTRACT IS INCLUDED IN THE NOTICE TO BIDDERS AND SPECIAL PROVISIONS BOOK.

LOCATION MAP

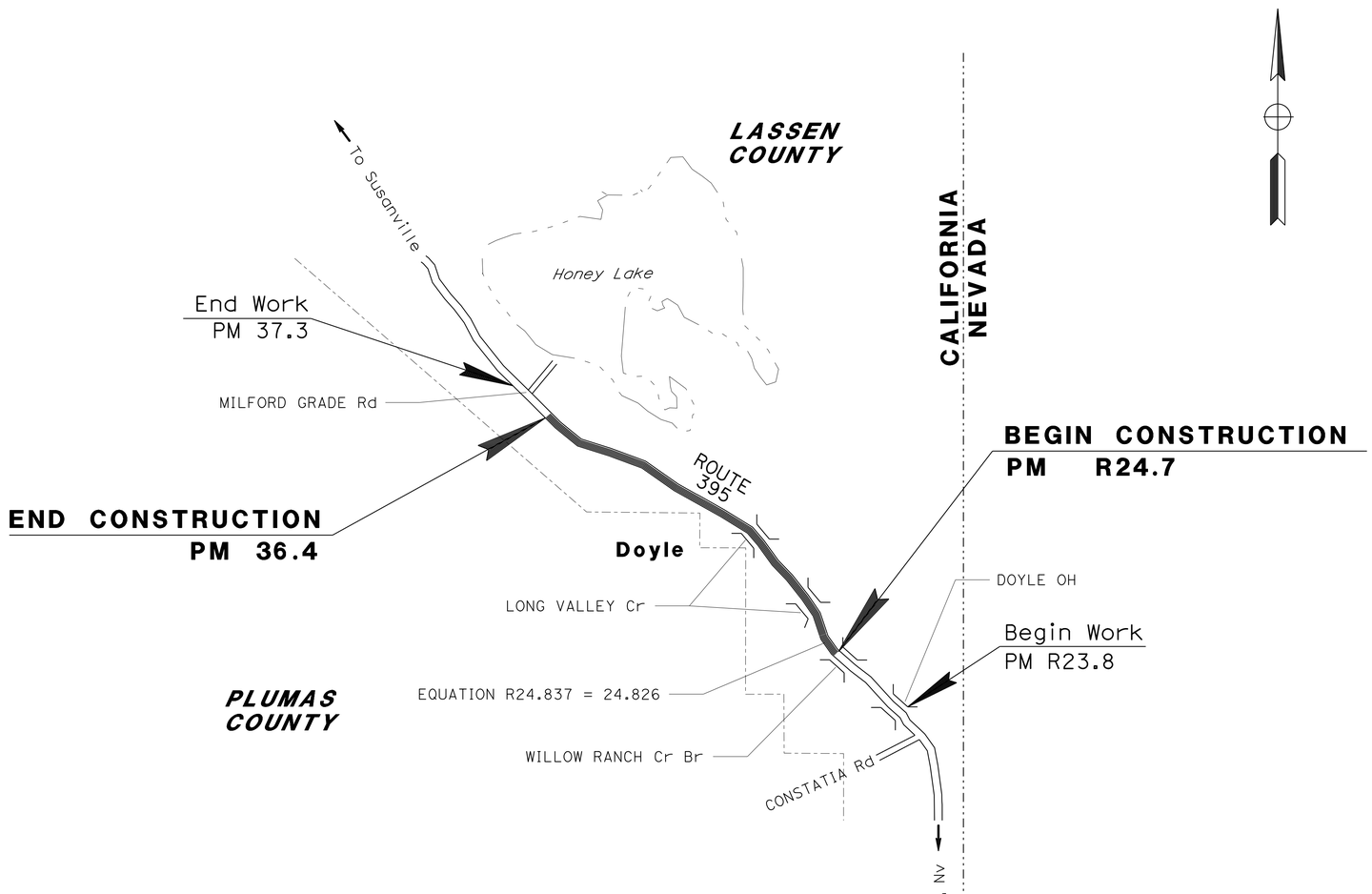

NO SCALE

THE CONTRACTOR SHALL POSSESS THE CLASS (OR CLASSES) OF LICENSE AS SPECIFIED IN THE "NOTICE TO BIDDERS."

Denise Fuzeré 01-05-15
PROJECT ENGINEER DATE
REGISTERED CIVIL ENGINEER

REGISTERED PROFESSIONAL ENGINEER DENISE FUZERE No. C69865 Exp. 09-30-16 CIVIL STATE OF CALIFORNIA

January 5, 2015
PLANS APPROVAL DATE

THE STATE OF CALIFORNIA OR ITS OFFICERS OR AGENTS SHALL NOT BE RESPONSIBLE FOR THE ACCURACY OR COMPLETENESS OF SCANNED COPIES OF THIS PLAN SHEET.

CONTRACT No.	02-4G1404
PROJECT ID	02130000791

PROJECT MANAGER: LANCE BROWN
DESIGN ENGINEER: LANCE BROWN

P:\proj1\02\4G140_plans\pse\24g140ab001.dgn

LAST REVISION 12-02-14 DATE PLOTTED => 05-JAN-2015 TIME PLOTTED => 10:26

Dist	COUNTY	ROUTE	POST MILES TOTAL PROJECT	SHEET No.	TOTAL SHEETS
02	Las	395	R24.7/36.4	2	24

Denise Fuzeré 01-05-15
REGISTERED CIVIL ENGINEER DATE

01-05-15
PLANS APPROVAL DATE

REGISTERED PROFESSIONAL ENGINEER DENISE FUZERE No. C69865 Exp. 09-30-16 CIVIL STATE OF CALIFORNIA

THE STATE OF CALIFORNIA OR ITS OFFICERS OR AGENTS SHALL NOT BE RESPONSIBLE FOR THE ACCURACY OR COMPLETENESS OF SCANNED COPIES OF THIS PLAN SHEET.

NOTES:

1. DIMENSIONS OF THE PAVEMENT STRUCTURES (STRUCTURAL SECTIONS) ARE SUBJECT TO TOLERANCES SPECIFIED IN THE STANDARD SPECIFICATIONS.
2. FOR ACCURATE RIGHT OF WAY DATA, CONTACT RIGHT OF WAY ENGINEERING AT THE DISTRICT OFFICE.
3. EXISTING UTILITY FACILITIES HAVE NOT BEEN INCLUDED ON THESE PLANS.
4. DO NOT PLACE RUMBLE STRIP ON BRIDGE DECK.
5. REMOVE PAVEMENT MARKERS PRIOR TO PAVING.

PAVEMENT CLIMATE REGION

HIGH DESERT

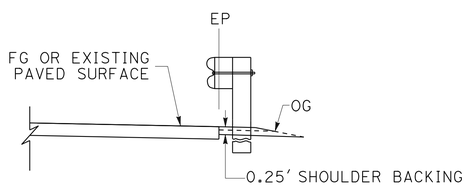

SHOULDER BACKING UNDER GUARDRAIL DETAIL (Typ)

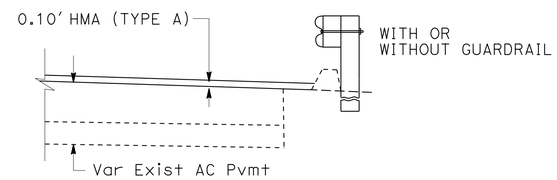

DIKE DETAILS
(TYPICAL BOTH DIRECTIONS)

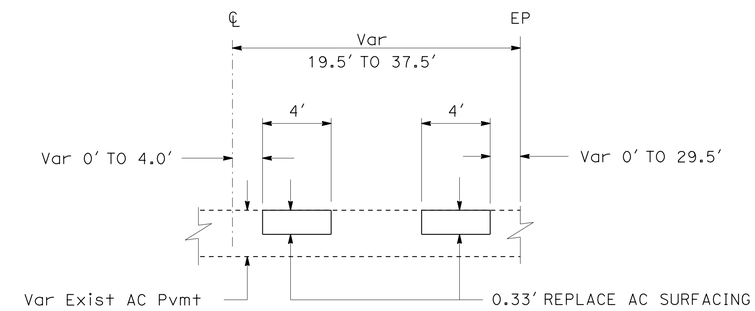

REPLACE ASPHALT CONCRETE SURFACING
(TYPICAL BOTH DIRECTIONS)

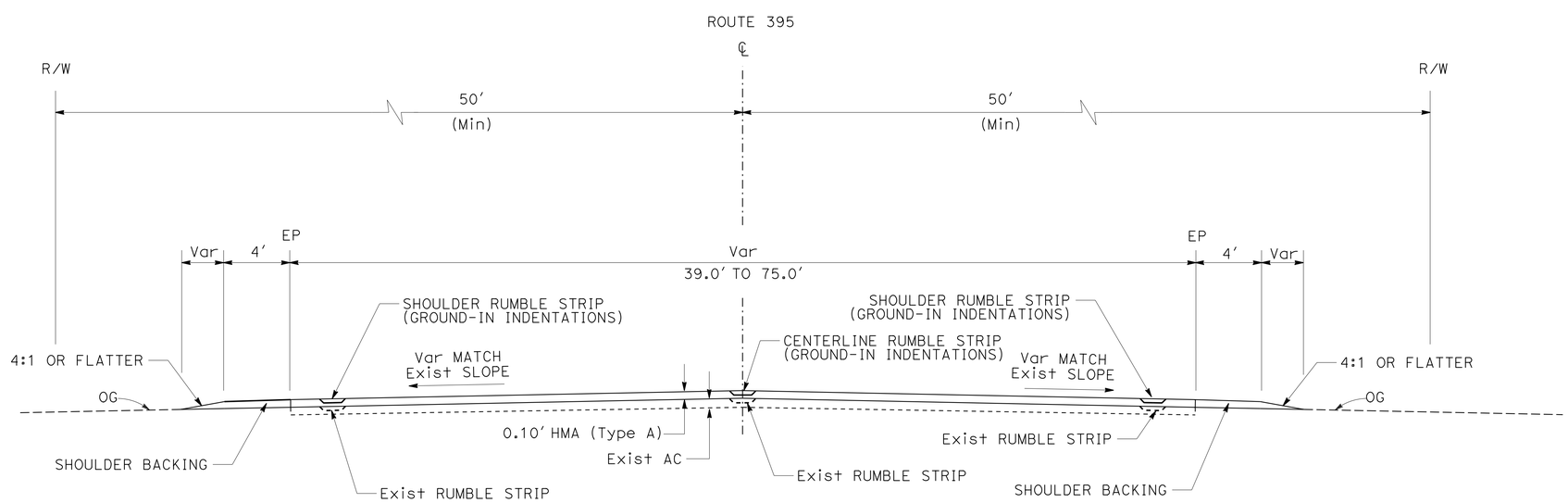

TYPICAL CROSS SECTION
PM R24.7/36.4

TYPICAL CROSS SECTIONS
NO SCALE

X-1

REVISED BY	DATE REVISED

DENISE FUZERE'	KARLIE SMITH

CALCULATED-DESIGNED BY	CHECKED BY

FUNCTIONAL SUPERVISOR: LANCE BROWN

STATE OF CALIFORNIA - DEPARTMENT OF TRANSPORTATION
Caltrans® MAINTENANCE

P:\proj1\02\4G140_plans\pse\24g140ca001.dgn

LAST REVISION 01-05-15 | DATE PLOTTED => 05-JAN-2015 | TIME PLOTTED => 10:26

Dist	COUNTY	ROUTE	POST MILES TOTAL PROJECT	SHEET No.	TOTAL SHEETS
02	Las	395	R24.7/36.4	3	24

Denise Fuzeré 01-05-15
REGISTERED CIVIL ENGINEER DATE

01-05-15
PLANS APPROVAL DATE

REGISTERED PROFESSIONAL ENGINEER DENISE FUZERE No. C69865 Exp. 09-30-16 CIVIL STATE OF CALIFORNIA

THE STATE OF CALIFORNIA OR ITS OFFICERS OR AGENTS SHALL NOT BE RESPONSIBLE FOR THE ACCURACY OR COMPLETENESS OF SCANNED COPIES OF THIS PLAN SHEET.

NOTES:

1. EXISTING UTILITY FACILITIES HAVE NOT BEEN INCLUDED ON THESE PLANS.
2. GRIND EXISTING SURFACES TO ACCOMMODATE A MINIMUM TAPER THICKNESS OF 0.10′ WHEN EITHER:
   A. HMA MATERIAL SUCH AS RUBBERIZED, POLYMER MODIFIED OR OPEN GRADED IS UNSUITABOE FOR RAKING TO A MAXIMUM 0.02′ THICKNESS AT THE CONFORM.
   B. TEMPORARY TAPER WILL BE IN PLACE FOR MORE THAN 14 DAYS.
3. PERMANENT SURFACE MAY BE EXISTING OR NEW PAVEMENT.
4. ROADWAY SURFACE IS THE TOP OF EXISTING SURFACE OR THE TOP OF THE PLANED SURFACE.
5. FOR TEMPORARY TAPERS ON BRIDGE DECKS AND APPROIACH SLABS, CONSTRUCT TEMPORARY TAPERS WITH POLYESTER CONCRETE.
6. IF AUTHORIZED, YOU MAY USE ALTERNATIVE MATERIALS OR METHODS TO PRODUCE THE REQUIRED TAPER.

LEGEND:

- HMA MATERIAL (TEMPORARY TAPER) (SEE NOTE 5)
- IF NECESSARY, COLD PLANE AC PAVEMENT AND PLACE HMA MATERIAL (SEE NOTE 2)
- COLD PLANE AC PAVEMENT (0.00′ TO 0.10′)
- 0.10′ COLD PLANE AC PAVEMENT 0.10′ HMA (TYPE A)

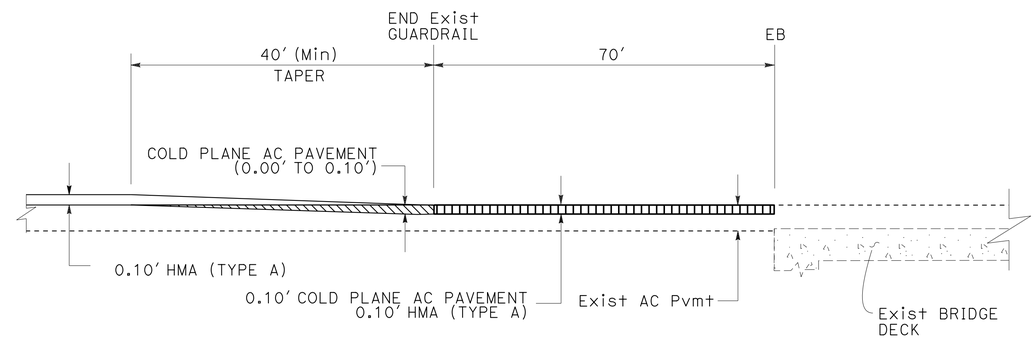

BRIDGE CONFORM TAPER

WILLOW RANCH CREEK Br No. 7-53
PM R24.7

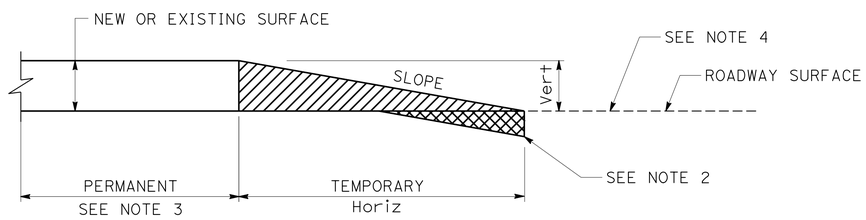

TYPICAL PAVING CONFORM FOR TEMPORARY CONSTRUCTION TAPERS

Vert	SLOPE RATIO Horiz/Vert
0-0.10′	70:1
GREATER THAN 0.10′	160:1

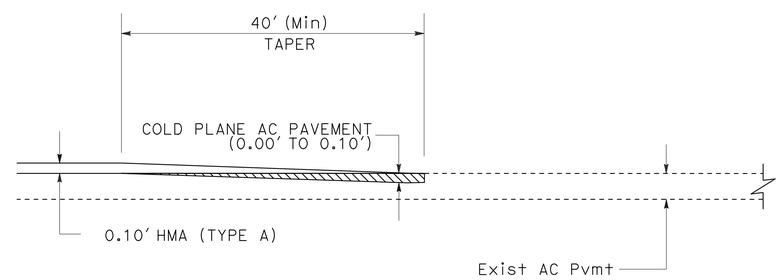

MAINLINE CONFORM TAPER

PM 36.4

CONSTRUCTION DETAILS

NO SCALE

C-1

REVISED BY	DATE REVISED

DENISE FUZERE′ — KARLIE SMITH — CALCULATED-DESIGNED BY — CHECKED BY

FUNCTIONAL SUPERVISOR: LANCE BROWN

STATE OF CALIFORNIA - DEPARTMENT OF TRANSPORTATION — Caltrans — MAINTENANCE

P:\proj1\02\4G140_plans\pse\24g140ga001.dgn

LAST REVISION 01-05-15 | DATE PLOTTED => 05-JAN-2015 | TIME PLOTTED => 10:26

Dist	COUNTY	ROUTE	POST MILES TOTAL PROJECT	SHEET No.	TOTAL SHEETS
02	Las	395	R24.7/36.4	4	24

Denise Fuzeré 01-05-15
REGISTERED CIVIL ENGINEER DATE

01-05-15
PLANS APPROVAL DATE

REGISTERED PROFESSIONAL ENGINEER DENISE FUZERE No. C69865 Exp. 09-30-16 CIVIL STATE OF CALIFORNIA

THE STATE OF CALIFORNIA OR ITS OFFICERS OR AGENTS SHALL NOT BE RESPONSIBLE FOR THE ACCURACY OR COMPLETENESS OF SCANNED COPIES OF THIS PLAN SHEET.

NOTES:

1. FOR DETAILS OF STANDARD HARDWARE USED TO CONSTRUCT GUARDRAIL, SEE REVISED STANDARD PLAN A77M1. HARDWARE POSTS AND RAIL ELEMENTS FOR MIDWEST GUARDRAIL ARE VAILD FOR METAL BEAM GUARD RAIL.
2. FOR DETAILS USED FOR WOOD POSTS AND WOOD BLOCKS USED TO CONSTRUCT GUARDRAIL SEE REVISED STANDARD PLANS A77N1.
3. IF AUTHORIZED, A SINGLE LINE POST MAY BE MOVED UP TO 12" ALONG THE GUARDRAIL TO AVOID OBSTACLES. IF POST IS MOVED BOLT THROUGH THE BLOCK ONLY.
4. PLACE TYPE F DIKE UNDER GUARDRAIL AND PLACE TYPE C DIKE IF TOE OF DIKE IS MORE THAN 2" IN FRONT OF THE FACE OF GUARDRAIL.
5. TO CONNECT RAILING TO TERMINAL SYSTEM END TREATMENT, TRANSITION THE TOP OF RAILING HEIGHT AT A RATIO OF 120:1 TO TERMINAL SYSTEM END TREATMENT HEIGHT PLUS ONE 12'-6" STANDARD RAILING SECTION AT THE TERMINAL HEIGHT.
6. ADDITIONAL HOLE IN UPPERMOST PORTION OF LINE POST IS FOR POTENTIAL FUTURE ADJUSTMENTS OF RAILING HEIGHT. SEE REVISED STANDARD PLANS A77N1.
7. FOR WOOD POST, TOENAIL BLOCKS TO POST WITH 2-16D GALVANIZED NAILS.
8. DIMENSIONS FOR POST AND BLOCKS ARE NOMINAL.
9. SLOTTED HOLE FOR BOLTED CONNECTION OF RAIL ELEMENT TO BLOCK AND POST. SEE "RAIL ELEMENT SPLICE DETAIL."
10. SLOTTED HOLES FOR SPLICE BOLTS TO OVERLAP ENDS OF RAIL ELEMENT. SEE "SECTION THRU RAIL ELEMENT."
11. INSTALL POSTS IN SOIL.
12. EXISTING UTILITY FACILITIES HAVE NOT BEEN INCLUDED ON THESE PLANS.

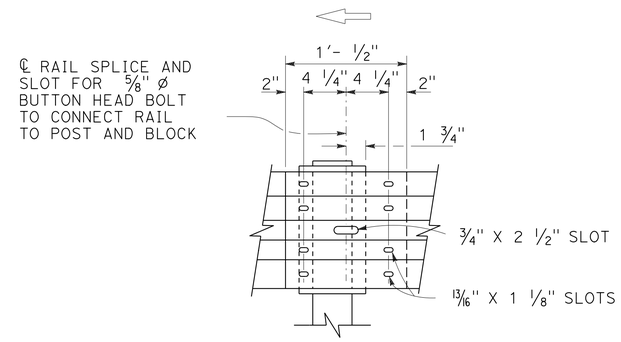

ELEVATION

RAIL ELEMENT SPLICE DETAIL

A) CONNECT THE OVER LAPPED END OF THE RAIL ELEMENTS WITH 5/8" ø X 1 3/8" BUTTON HEAD OVAL SHOULDER SPLICE BOLTS INSERTED INTO THE 13/16" X 1 1/8" SLOTS AND BOLTED TOGETHER WITH 5/8" ø RECESSED HEX NUTS. RECESS OF HEX NUT POINTS TOWARD RAIL ELEMENT. A TOTAL OF 8 BOLTS AND NUTS ARE TO BE USED AT EACH RAIL SPLICE CONNECTION.

B) THE ENDS OF THE RAIL ELEMENTS ARE TO BE OVERLAPPED IN THE DIRECTION OF TRAFFIC (SEE DETAILS).

C) WHERE END CAP IS TO BE ATTACHED TO THE END OF A RAIL ELEMENT, A TOTAL OF 4 OF THE ABOVE DESCRIBED SPLICE BOLTS AND NUTS ARE TO BE USED.

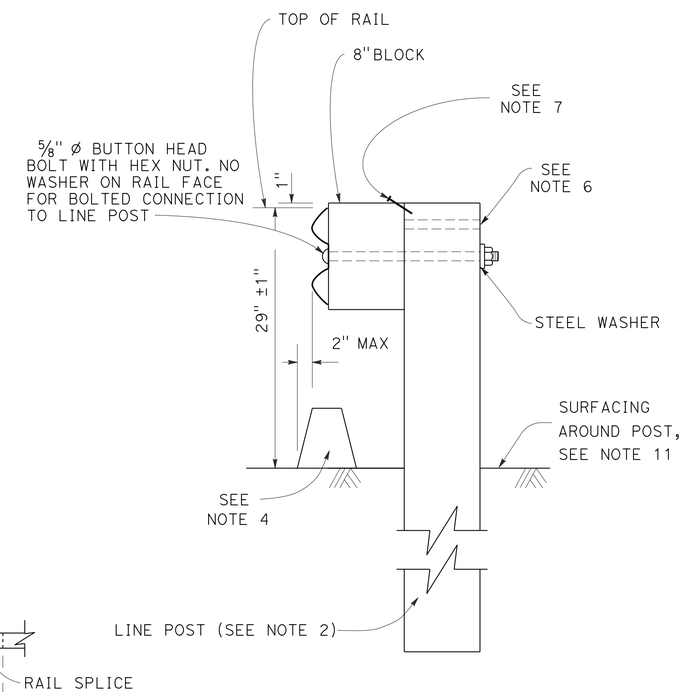

TYPICAL LINE POST INSTALLATION

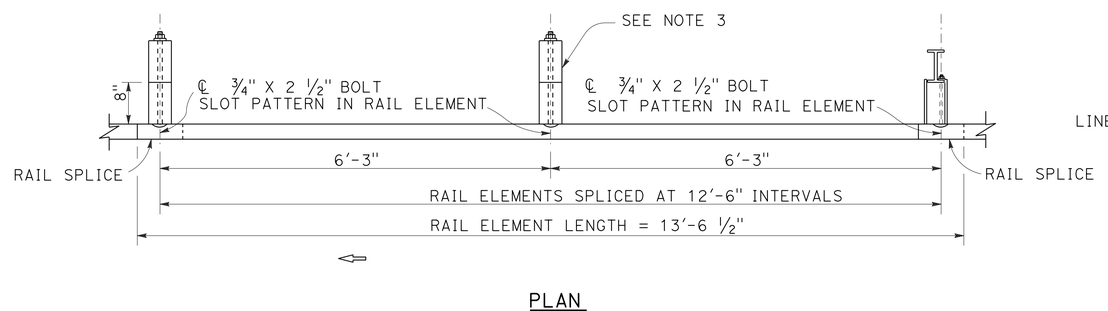

PLAN

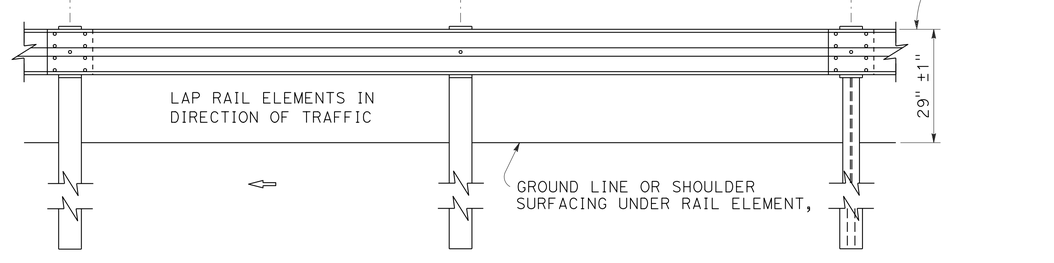

ELEVATION

METAL BEAM GUARDRAILING

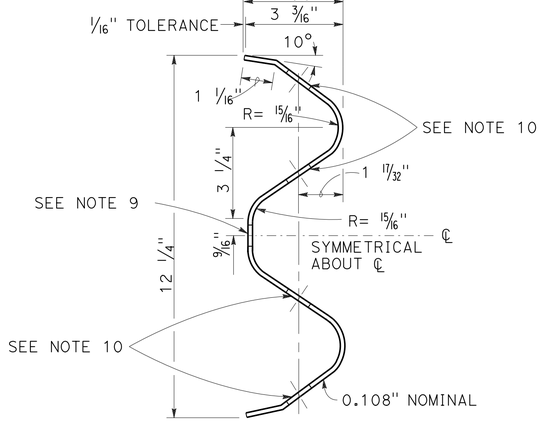

THRU RAIL ELEMENT

CONSTRUCTION DETAILS

NO SCALE

C-2

STATE OF CALIFORNIA - DEPARTMENT OF TRANSPORTATION
Caltrans MAINTENANCE

FUNCTIONAL SUPERVISOR: LANCE BROWN
CALCULATED-DESIGNED BY: DENISE FUZERE'
CHECKED BY: KARLIE SMITH
REVISED BY
DATE REVISED

P:\proj1\02\4G140_plans\pse\24g140ga002.dgn

LAST REVISION 01-05-15 | DATE PLOTTED => 05-JAN-2015 | TIME PLOTTED => 10:26

Dist	COUNTY	ROUTE	POST MILES TOTAL PROJECT	SHEET No.	TOTAL SHEETS
02	Las	395	R24.7/36.4	5	24

Denise Fuzeré 01-05-15
REGISTERED CIVIL ENGINEER DATE

01-05-15
PLANS APPROVAL DATE

REGISTERED PROFESSIONAL ENGINEER DENISE FUZERE No. C69865 Exp. 09-30-16 CIVIL STATE OF CALIFORNIA

THE STATE OF CALIFORNIA OR ITS OFFICERS OR AGENTS SHALL NOT BE RESPONSIBLE FOR THE ACCURACY OR COMPLETENESS OF SCANNED COPIES OF THIS PLAN SHEET.

NOTE:

1. EXISTING UTILITY FACILITIES HAVE NOT BEEN INCLUDED ON THESE PLANS.

ROAD CONNECTIONS

ROAD CONNECTION	SIDE	POST MILE	DIMENSIONS (LF) A	B	C	CASE
DRIVEWAY	R†	24.77	60	25	30	C
RIVERVIEW Dr	R†	25.21	125	30	50	A
DRIVEWAY	R†	25.31	40	30	20	C
CAROL Dr	L†	25.34	135	75	35	A
DRIVEWAY	R†	25.41	50	25	20	C
DRIVEWAY	R†	25.44	50	35	25	C
DRIVEWAY	R†	25.46	50	35	25	C
DRIVEWAY	R†	25.55	70	25	40	C
DRIVEWAY	R†	25.61	50	25	30	C
RACHEL Dr	L†	25.63	105	70	30	A
DRIVEWAY	R†	25.88	55	50	20	C
DRIVEWAY	R†	26.43	90	30	40	C
DRIVEWAY	L†	26.43	90	30	40	C
LAVER CROSSING	R†	26.59	115	70	40	A
DRIVEWAY	L†	26.59	50	25	20	C
DRIVEWAY	R†	28.56	45	20	15	C
COWBOY JOE Rd	L†	28.56	105	80	30	A
GARNIER Rd	R†	29.84	155	100	30	A
GARNIER Rd	L†	29.84	90	50	25	A
DRIVEWAY	L†	30.15	45	20	30	C
DRIVEWAY	L†	30.50	45	25	35	C
DRIVEWAY	L†	30.60	40	40	25	C
DRIVEWAY	L†	30.98	40	20	20	C
DRIVEWAY	R†	31.13	45	20	20	C
DRIVEWAY	L†	31.31	30	10	20	B
DRIVEWAY	R†	31.32	60	20	30	B
DRIVEWAY	L†	31.92	50	20	20	B
DRIVEWAY	L†	32.14	35	15	15	B
DRIVEWAY	L†	32.18	40	20	20	B
DRIVEWAY	R†	32.18	100	15	15	B
DRIVEWAY	L†	32.20	40	20	50	C
DRIVEWAY	L†	32.57	65	25	25	C
DRIVEWAY	L†	32.75	60	10	35	B
DRIVEWAY	L†	33.30	45	15	20	B
DRIVEWAY	R†	33.33	45	10	15	B
DRIVEWAY	L†	33.73	30	10	15	B
DRIVEWAY	R†	33.88	25	10	15	B
DRIVEWAY	L†	34.25	55	25	20	C
N HERLONG ACCESS Rd	R†	34.51	115	40	50	A
DRIVEWAY	R†	34.57	100	25	50	C
TUCKER Rd	L†	34.86	75	65	30	C
BUSINESS DRIVEWAY	L†	34.91	500	20	500	A
DRIVEWAY	R†	34.87	50	25	15	C
DRIVEWAY	R†	34.91	50	25	15	C
LEWIS Ln	R†	34.95	65	25	20	C
DRIVEWAY	R†	34.98	50	25	15	C
DRIVEWAY	R†	35.05	60	30	20	C
DRIVEWAY	R†	35.68	40	10	20	B
DRIVEWAY	L†	35.74	55	20	20	C
DRIVEWAY	L†	36.05	40	20	20	C
DRIVEWAY	R†	36.46	110	25	35	C

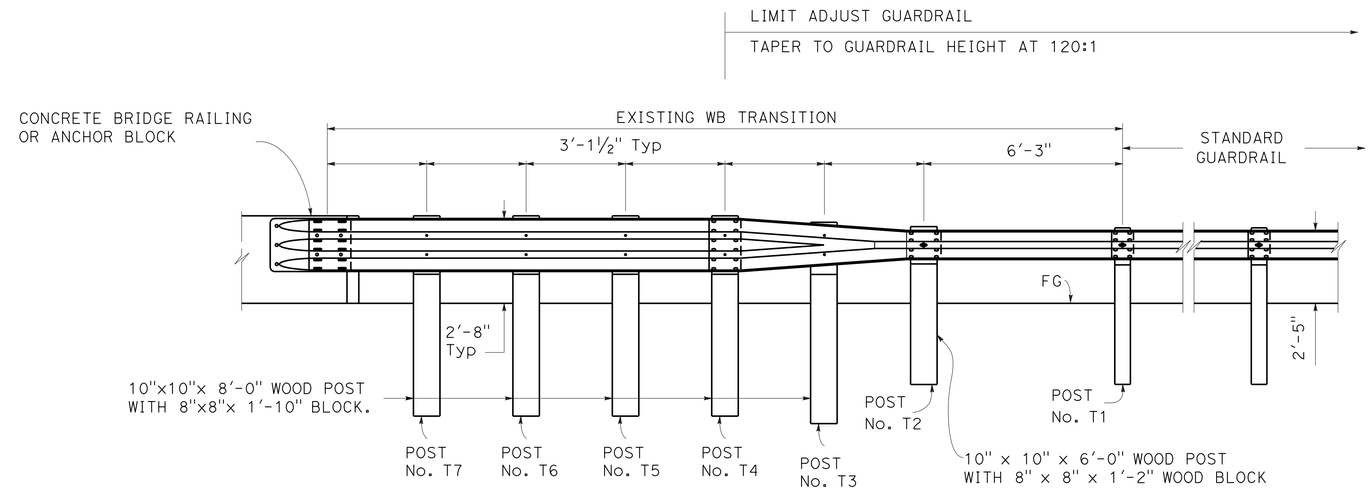

ELEVATION

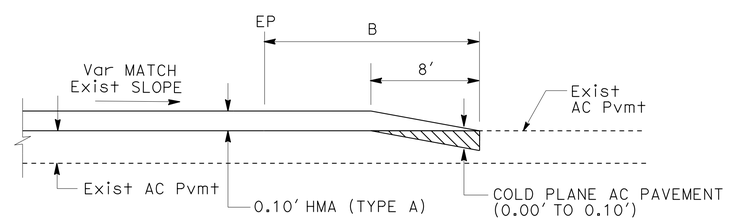

CASE A
SECTION A-A

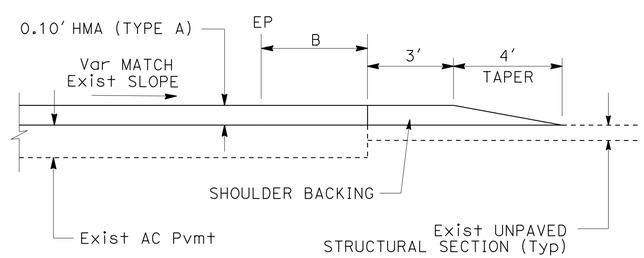

CASE B
SECTION A-A

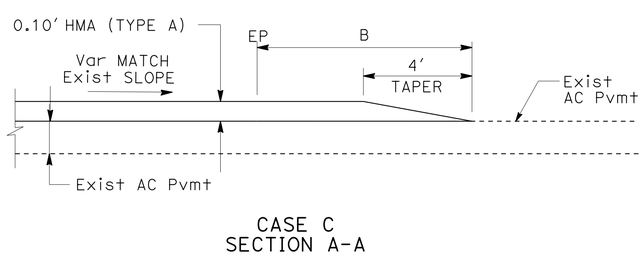

CASE C
SECTION A-A

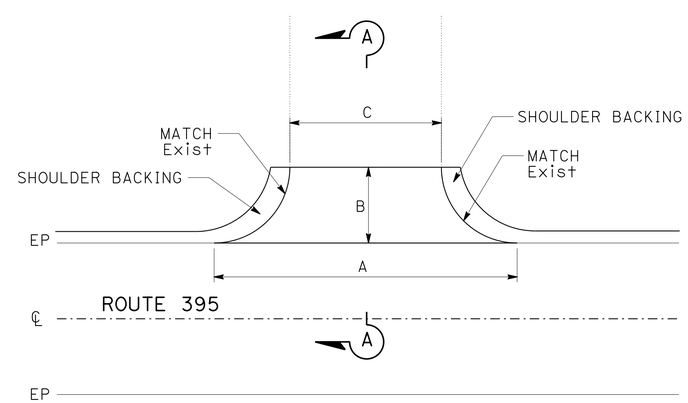

PAVED ROAD CONNECTIONS

CONSTRUCTION DETAILS

NO SCALE

C-3

REVISED BY | DATE REVISED
DENISE FUZERE' | KARLIE SMITH
CALCULATED-DESIGNED BY | CHECKED BY
FUNCTIONAL SUPERVISOR | LANCE BROWN
STATE OF CALIFORNIA - DEPARTMENT OF TRANSPORTATION
Caltrans® MAINTENANCE

P:\proj1\02\4G140_plans\pse\24g140ga003.dgn

LAST REVISION 01-05-15 | DATE PLOTTED => 05-JAN-2015 | TIME PLOTTED => 10:27

Dist	COUNTY	ROUTE	POST MILES TOTAL PROJECT	SHEET No.	TOTAL SHEETS
02	Las	395	R24.7/36.4	6	24

Denise Fuzeré 01-05-15
REGISTERED CIVIL ENGINEER DATE

01-05-15
PLANS APPROVAL DATE

REGISTERED PROFESSIONAL ENGINEER DENISE FUZERE No. C69865 Exp. 09-30-16 CIVIL STATE OF CALIFORNIA

THE STATE OF CALIFORNIA OR ITS OFFICERS OR AGENTS SHALL NOT BE RESPONSIBLE FOR THE ACCURACY OR COMPLETENESS OF SCANNED COPIES OF THIS PLAN SHEET.

NOTES:

1. EXISTING UTILITY FACILITIES HAVE NOT BEEN INCLUDED ON THESE PLANS.
2 DO NOT PLACE RUMBLE STRIP ON BRIDGE DECK.
3. REPLACE RUMBLE STRIP IN KIND.

LEGEND:

TRAFFIC STRIPE

PAVEMENT MARKER
(RETROREFLECTIVE - RECESSED)

RUMBLE STRIP (GROUND-IN INDENTATIONS)

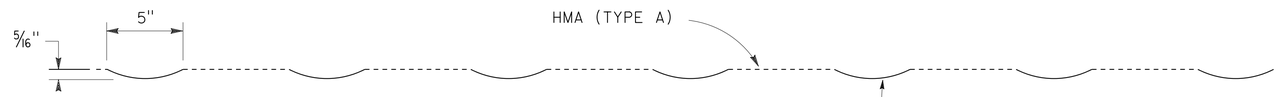

ELEVATION

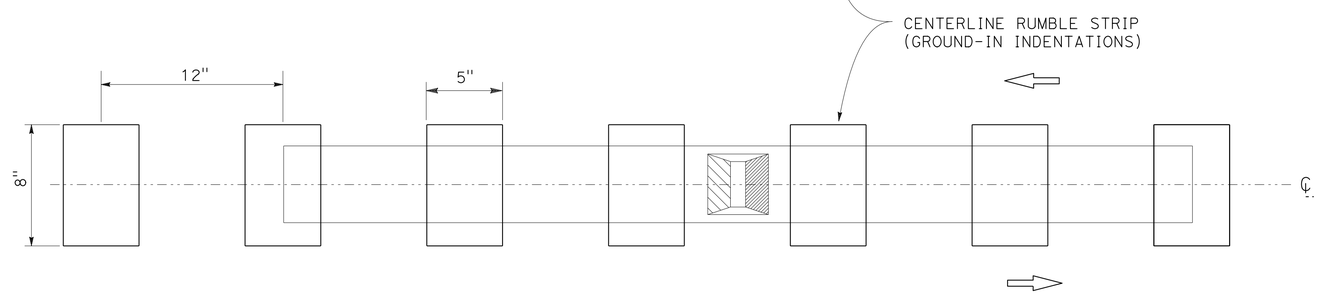

PLAN

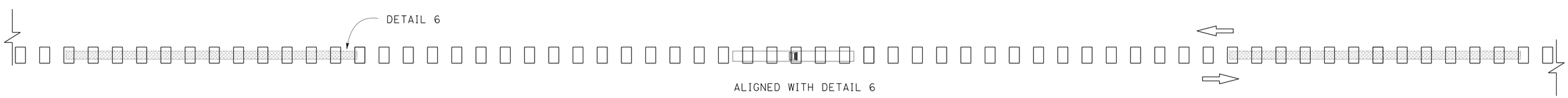

ALIGNED WITH DETAIL 6

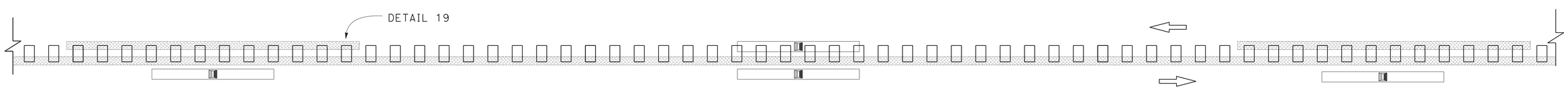

ALIGNED WITH DETAIL 19

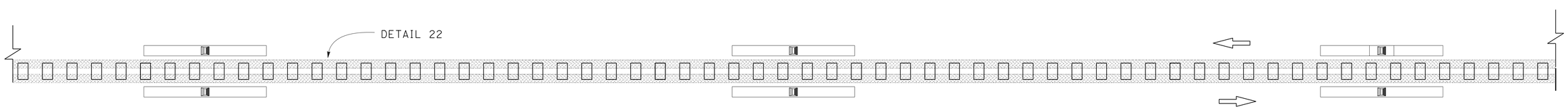

ALIGNED WITH DETAIL 22

CENTERLINE RUMBLE STRIP

CONSTRUCTION DETAILS

NO SCALE

C-4

REVISED BY	DATE REVISED
DENISE FUZERE'	KARLIE SMITH

CALCULATED-DESIGNED BY | CHECKED BY

FUNCTIONAL SUPERVISOR: LANCE BROWN

STATE OF CALIFORNIA - DEPARTMENT OF TRANSPORTATION
Caltrans® MAINTENANCE

P:\proj1\02\4G140_plans\pse\24g140ga004.dgn

LAST REVISION 01-05-15 | DATE PLOTTED => 05-JAN-2015 TIME PLOTTED => 10:27

Dist	COUNTY	ROUTE	POST MILES TOTAL PROJECT	SHEET No.	TOTAL SHEETS
02	Las	395	R24.7/36.4	7	24

Denise Fuzeré 01-05-15
REGISTERED CIVIL ENGINEER DATE

01-05-15
PLANS APPROVAL DATE

REGISTERED PROFESSIONAL ENGINEER DENISE FUZERE No. C69865 Exp. 09-30-16 CIVIL STATE OF CALIFORNIA

THE STATE OF CALIFORNIA OR ITS OFFICERS OR AGENTS SHALL NOT BE RESPONSIBLE FOR THE ACCURACY OR COMPLETENESS OF SCANNED COPIES OF THIS PLAN SHEET.

NOTES:

1. EXISTING UTILITY FACILITIES HAVE NOT BEEN INCLUDED ON THESE PLANS.
2. DO NOT PLACE RUMBLE STRIP ON BRIDGE DECK.
3. REPLACE RUMBLE STRIP IN KIND.

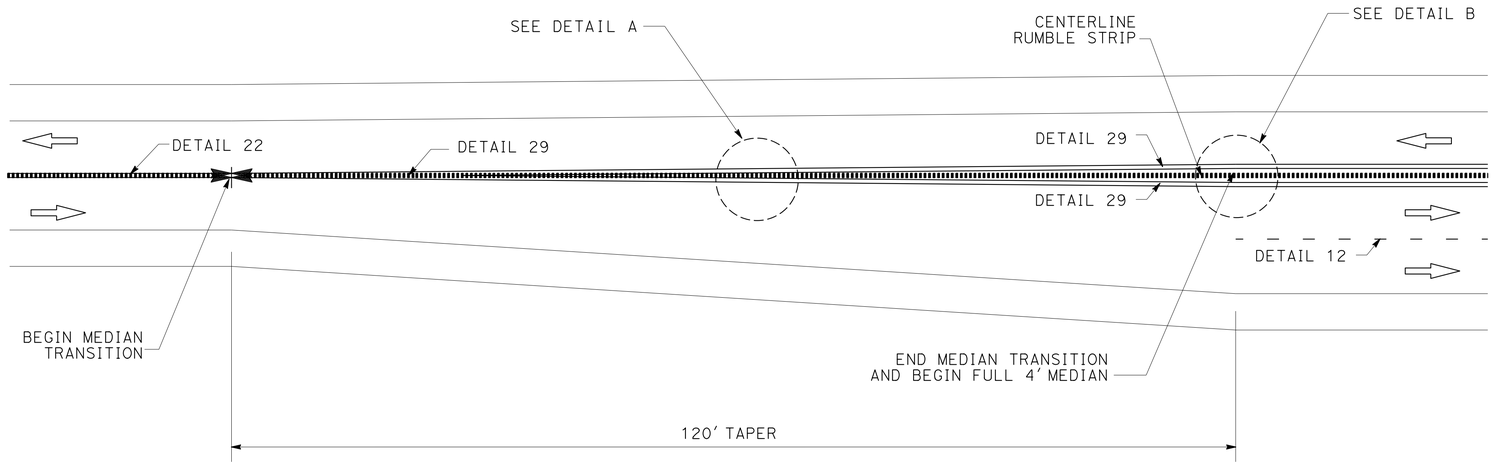

CENTERLINE RUMBLE STRIP AT BEGINNING OF PASSING LANE

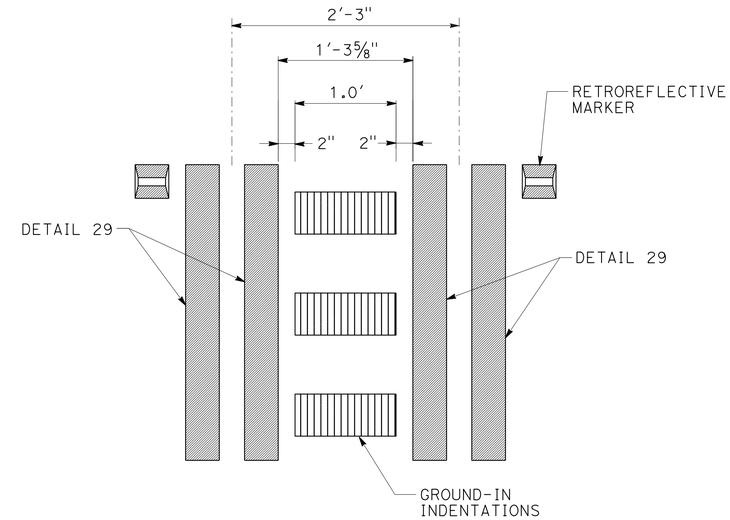

DETAIL A

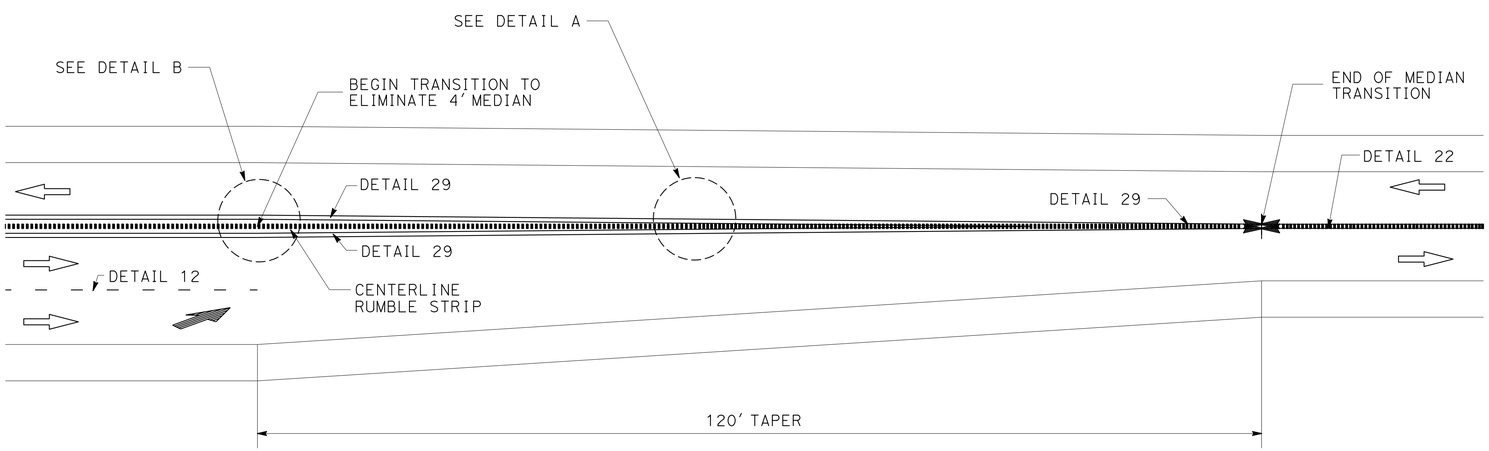

CENTERLINE RUMBLE STRIP AT END OF PASSING LANE

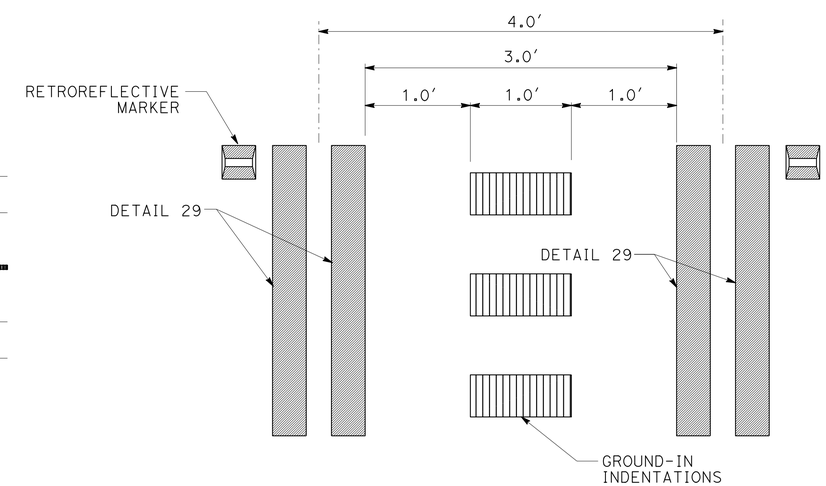

DETAIL B

CONSTRUCTION DETAILS

NO SCALE

C-5

REVISED BY | DATE REVISED
DENISE FUZERE′ | KARLIE SMITH
CALCULATED-DESIGNED BY | CHECKED BY
FUNCTIONAL SUPERVISOR: LANCE BROWN

STATE OF CALIFORNIA - DEPARTMENT OF TRANSPORTATION
Caltrans® MAINTENANCE

P:\proj1\02\4G140_plans\pse\24g140ga005.dgn

LAST REVISION 01-05-15 | DATE PLOTTED => 05-JAN-2015 | TIME PLOTTED => 10:27

Dist	COUNTY	ROUTE	POST MILES TOTAL PROJECT	SHEET No.	TOTAL SHEETS
02	Las	395	R24.7/36.4	8	24

Denise Fuzeré 01-05-15
REGISTERED CIVIL ENGINEER DATE

01-05-15
PLANS APPROVAL DATE

REGISTERED PROFESSIONAL ENGINEER DENISE FUZERE No. C69865 Exp. 09-30-16 CIVIL STATE OF CALIFORNIA

THE STATE OF CALIFORNIA OR ITS OFFICERS OR AGENTS SHALL NOT BE RESPONSIBLE FOR THE ACCURACY OR COMPLETENESS OF SCANNED COPIES OF THIS PLAN SHEET.

NOTES:

1. EXISTING UTILITY FACILITIES HAVE NOT BEEN INCLUDED ON THESE PLANS.
2 DO NOT PLACE RUMBLE STRIP ON BRIDGE DECK.
3. REPLACE RUMBLE STRIP IN KIND.

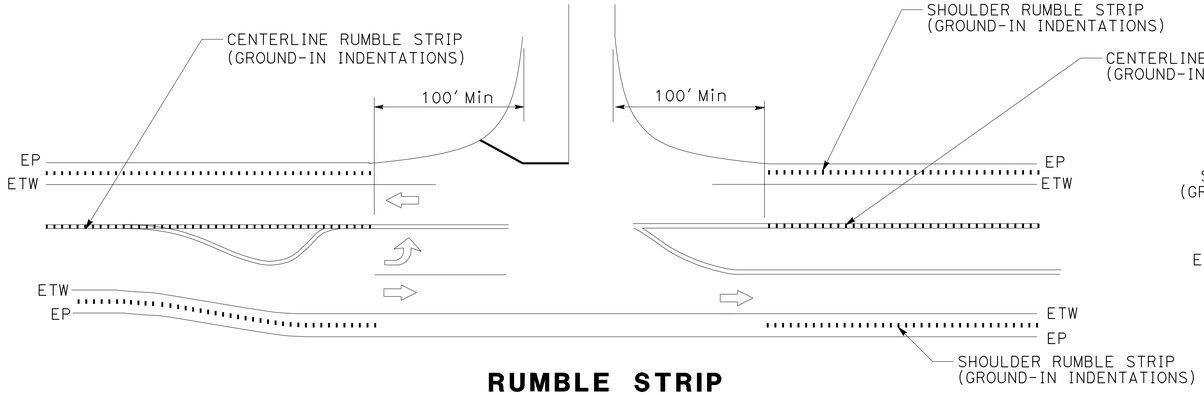

RUMBLE STRIP
AT INTERSECTION WITH ONE LEFT TURN POCKET

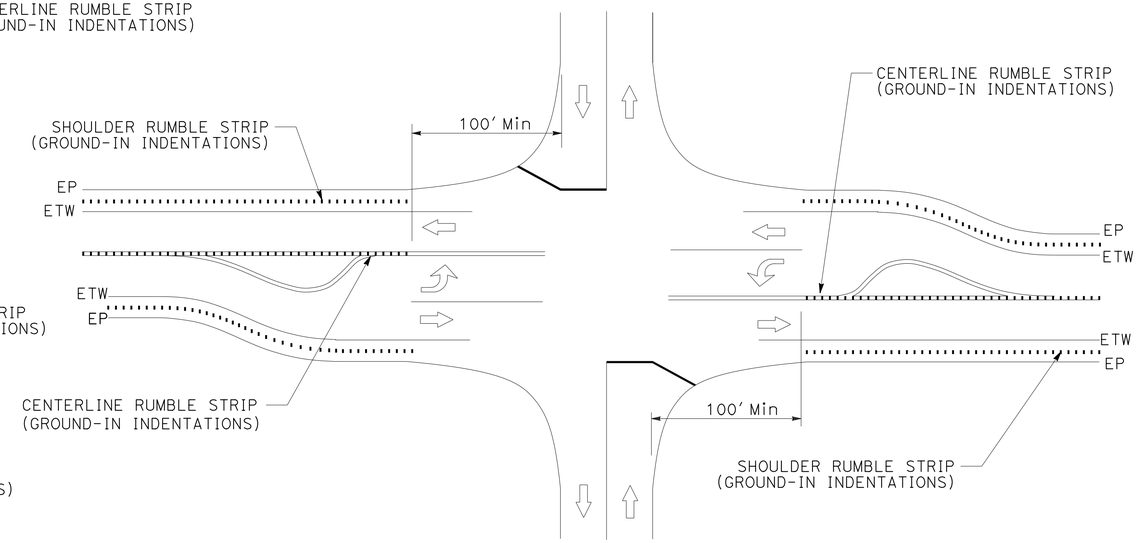

RUMBLE STRIP
AT INTERSECTION WITH LEFT TURN POCKETS

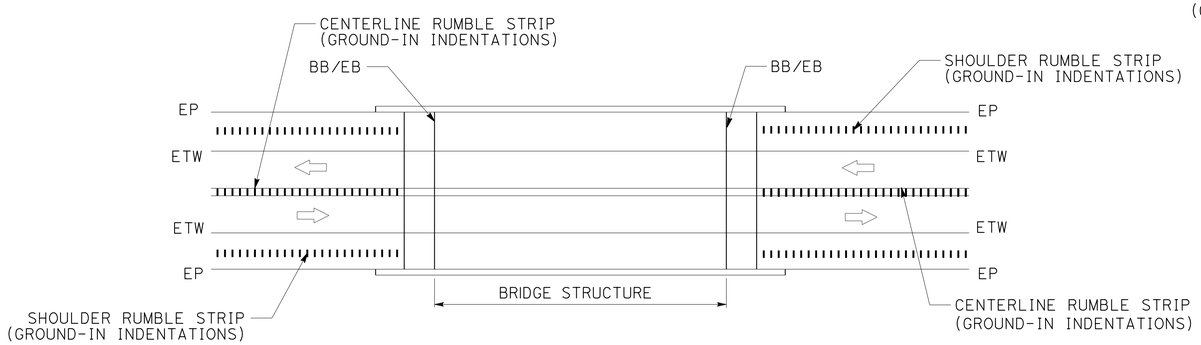

RUMBLE STRIP
AT BRIDGE STRUCTURE

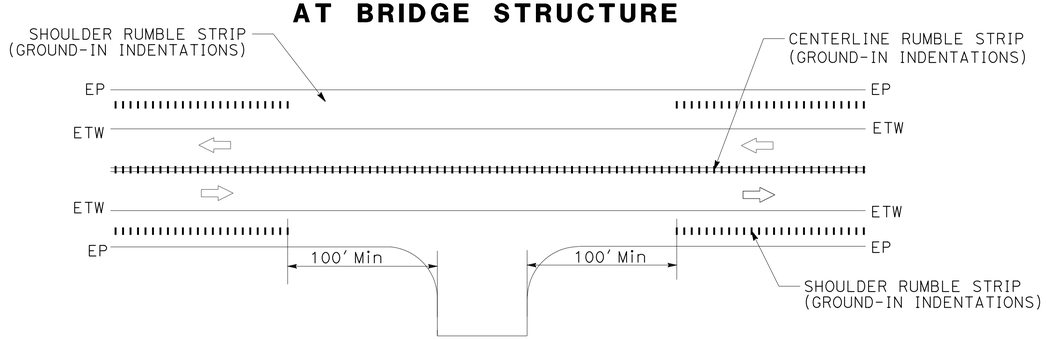

RUMBLE STRIP
AT DRIVEWAY/PRIVATE ROAD APPROACH

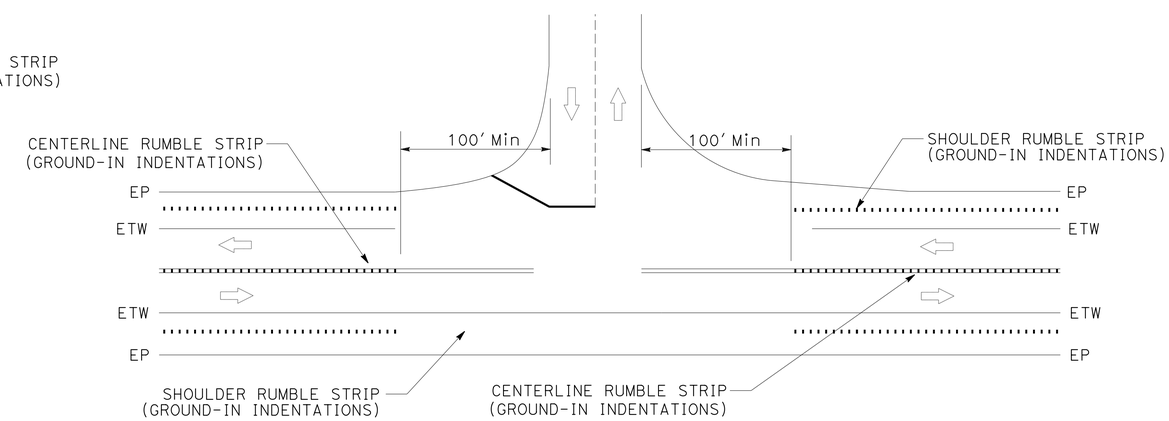

RUMBLE STRIP
AT PUBLIC ROAD CONNECTIONS

CONSTRUCTION DETAILS
NO SCALE

C-6

REVISED BY	DATE REVISED
DENISE FUZERE'	KARLIE SMITH
CALCULATED-DESIGNED BY	CHECKED BY
FUNCTIONAL SUPERVISOR	LANCE BROWN

STATE OF CALIFORNIA - DEPARTMENT OF TRANSPORTATION
Caltrans® MAINTENANCE

P:\proj1\02\4G140_plans\pse\24g140ga006.dgn

LAST REVISION 01-05-15 | DATE PLOTTED => 05-JAN-2015 | TIME PLOTTED => 10:27

Dist	COUNTY	ROUTE	POST MILES TOTAL PROJECT	SHEET No.	TOTAL SHEETS
02	Las	395	R24.7/36.4	9	24

Denise Fuzeré 01-05-15
REGISTERED CIVIL ENGINEER DATE

01-05-15
PLANS APPROVAL DATE

REGISTERED PROFESSIONAL ENGINEER DENISE FUZERE No. C69865 Exp. 09-30-16 CIVIL STATE OF CALIFORNIA

THE STATE OF CALIFORNIA OR ITS OFFICERS OR AGENTS SHALL NOT BE RESPONSIBLE FOR THE ACCURACY OR COMPLETENESS OF SCANNED COPIES OF THIS PLAN SHEET.

NOTES:

1. EXACT LOCATION OF ALL SIGNS TO BE DETERMINED BY THE ENGINEER.
2. CALIFORNIA CODES ARE DESIGNATED BY (CA), OTHERWISE FEDERAL CODES ARE SHOWN.
3. INTERMEDIATE G20-1 SIGNS SHOULD BE PLACED EVERY 3 TO 5 MILES AS NECESSARY.
4. EXISTING UTILITY FACILITIES HAVE NOT BEEN INCLUDED ON THESE PLANS.

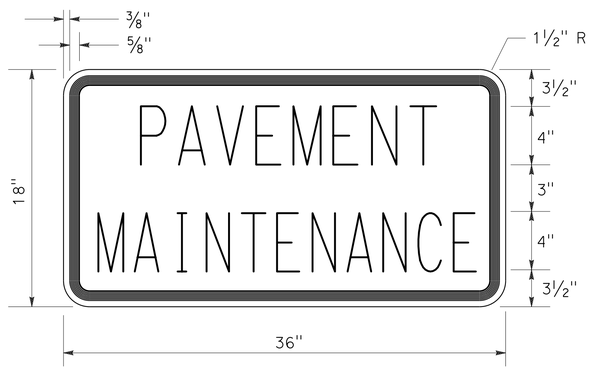

C23B(CA) SIGN PANEL DETAIL

ROAD CONNECTIONS

Co-Rte	PM	DESCRIPTION	SIDE	(B)
Las-395	25.21	RIVERVIEW Dr	Rt	1
	25.34	CAROL Dr (Co-Rte 342)	Lt	1
	25.63	RACHEL Dr	Lt	1
	26.59	LAVER CROSSING	Rt	1
	28.56	COWBOY JOE Rd (Co-Rte 323)	Lt	1
	29.84	GARNIER Rd	Rt/Lt	2
	34.51	N HERLONG ACCESS Rd (A25)	Rt	1
	34.86	TUCKER Rd	Lt	1
	34.95	LEWIS Ln	Rt	1

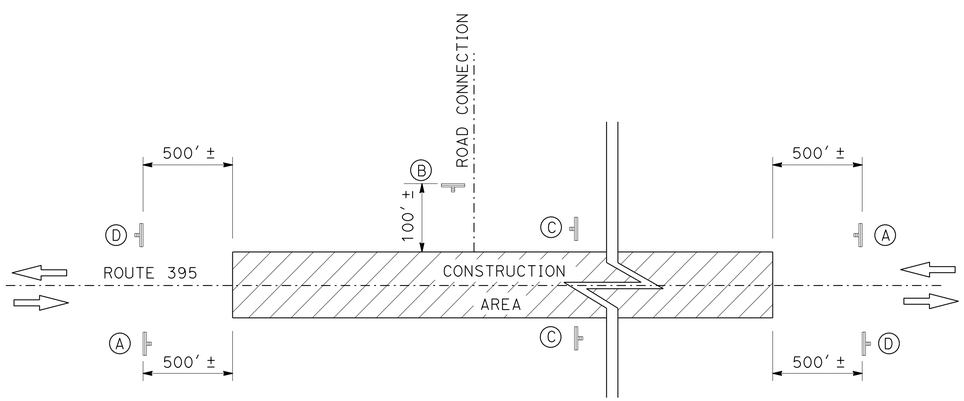

CONSTRUCTION AREA SIGNS (STATIONARY MOUNTED)

CONSTRUCTION AREA SIGNS (STATIONARY MOUNTED)

TYPE	CODE	PANEL SIZE	SIGN MESSAGE	NUMBER AND SIZE OF POST	No. OF SIGNS
(A)	C11(CA) C23B(CA)	36" x 18" 36" x 18"	ROAD WORK NEXT XX MILES PAVEMENT MAINTENANCE	1-4" x 6"	2
(B)	W20-1	48" x 48"	ROAD WORK AHEAD	1-4" x 6"	10
(C)	C11(CA)	36" x 18"	ROAD WORK NEXT XX MILES	1-4" x 4"	6
(D)	G20-2	36" x 18"	END ROAD WORK	1-4" x 4"	2

CONSTRUCTION AREA SIGNS

NO SCALE

CS-1

REVISED BY | DATE REVISED
DENISE FUZERE' | KARLIE SMITH
CALCULATED-DESIGNED BY | CHECKED BY
FUNCTIONAL SUPERVISOR | LANCE BROWN

STATE OF CALIFORNIA - DEPARTMENT OF TRANSPORTATION
Caltrans® MAINTENANCE

P:\proj1\02\4G140_plans\pse\24g1401a001.dgn

LAST REVISION 01-05-15 | DATE PLOTTED => 05-JAN-2015 | TIME PLOTTED => 10:27

Dist	COUNTY	ROUTE	POST MILES TOTAL PROJECT	SHEET No.	TOTAL SHEETS
02	Las	395	R24.7/36.4	10	24

Denise Fuzeré 01-05-15
REGISTERED CIVIL ENGINEER DATE

01-05-15
PLANS APPROVAL DATE

REGISTERED PROFESSIONAL ENGINEER DENISE FUZERE No. C69865 Exp. 09-30-16 CIVIL STATE OF CALIFORNIA

THE STATE OF CALIFORNIA OR ITS OFFICERS OR AGENTS SHALL NOT BE RESPONSIBLE FOR THE ACCURACY OR COMPLETENESS OF SCANNED COPIES OF THIS PLAN SHEET.

NOTES:

1. STRIPING QUANTITIES INCLUDE THE LENGTH TO EXTEND APPROXIMATELY 50' BEYOND PAVING TO MATCH THE EXISTING STRIPE DETAILS.

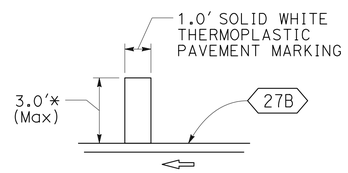

DETAIL A

* ACTUAL LENGTH MAY VARY DUE TO PAVEMENT WIDTH

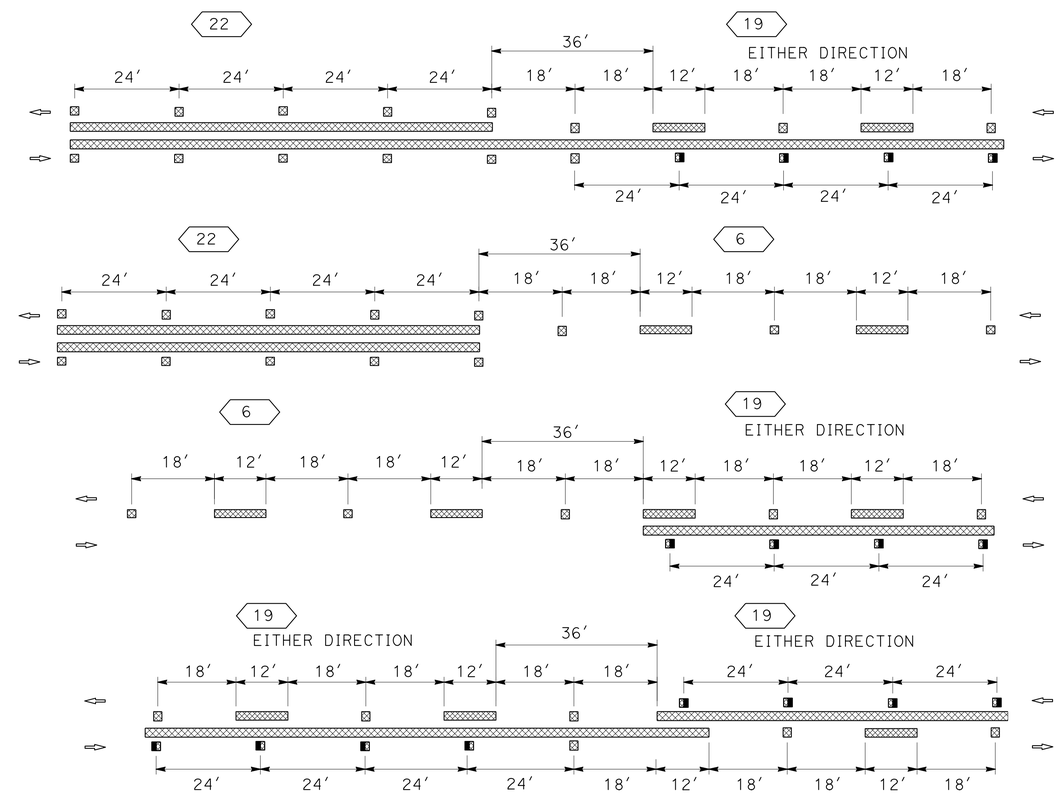

TYPICAL STRIPE TRANSITION DETAILS

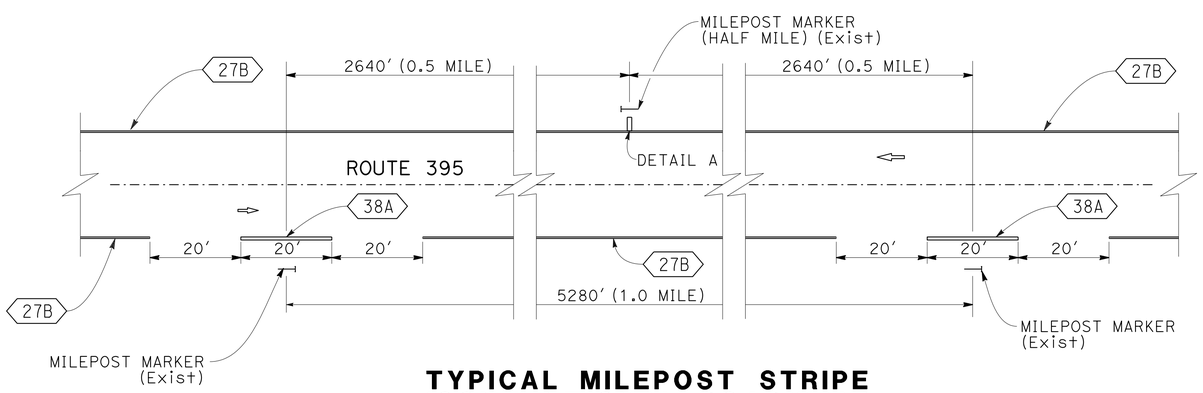

TYPICAL MILEPOST STRIPE (CONVENTIONAL ROADWAY)

NO HALF MILE STRIPE WITHIN AN EQUATION

PAVEMENT DELINEATION DETAILS

NO SCALE

PDD-1

REVISED BY	DATE REVISED
DENISE FUZERE'	KARLIE SMITH
CALCULATED-DESIGNED BY	CHECKED BY
FUNCTIONAL SUPERVISOR	LANCE BROWN

STATE OF CALIFORNIA - DEPARTMENT OF TRANSPORTATION
Caltrans® MAINTENANCE

P:\proj1\02\4G140_plans\pse\24g140nb001.dgn

LAST REVISION 01-05-15 | DATE PLOTTED => 05-JAN-2015 | TIME PLOTTED => 10:27

Dist	COUNTY	ROUTE	POST MILES TOTAL PROJECT	SHEET No.	TOTAL SHEETS
02	Las	395	R24.7/36.4	11	24

Denise Fuzeré 01-05-15
REGISTERED CIVIL ENGINEER DATE

01-05-15
PLANS APPROVAL DATE

REGISTERED PROFESSIONAL ENGINEER DENISE FUZERE No. C69865 Exp. 09-30-16 CIVIL STATE OF CALIFORNIA

THE STATE OF CALIFORNIA OR ITS OFFICERS OR AGENTS SHALL NOT BE RESPONSIBLE FOR THE ACCURACY OR COMPLETENESS OF SCANNED COPIES OF THIS PLAN SHEET.

NOTE:

1. (N) NOT A SEPERATE PAY ITEM, FOR INFORMATION ONLY.

ABBREVIATIONS;

Mid MIDDLE

THERMOPLASTIC TRAFFIC STRIPE (SPRAYABLE)

POST MILE LIMITS	DETAIL 6	DETAIL 12	DETAIL 19	DETAIL 22	DETAIL 27B	DETAIL 27C	DETAIL 29	DETAIL 32	DETAIL 38	DETAIL 38A
	LF	LF	LF	LF	LF	LF	LF	LF	LF	LF
R24.70-36.40	26,400	10,877	8079	8924	120,384	6495	22,810	1056	5280	240
TOTAL	210,545									

THERMOPLASTIC PAVEMENT MARKING

PM	L+	Mid	R+	(N) EA	SQFT	REMARKS
R24.70-36.40	X			11	33.0	DETAIL A
25.21			X	1	22.0	STOP
25.21			X	1	40.0	ROAD CONNECTION LIMIT LINE
25.22		X		1	42.0	TYPE III ARROW (L+)
25.25		X		1	42.0	TYPE III ARROW (L+)
25.31		X		1	42.0	TYPE III ARROW (L+)
25.34		X		1	42.0	TYPE III ARROW (L+)
25.35	X			1	22.0	STOP
25.35	X			1	40.0	ROAD CONNECTION LIMIT LINE
25.36	X			1	42.0	TYPE III ARROW (R+)
25.38	X			1	42.0	TYPE III ARROW (R+)
25.56		X		1	42.0	TYPE III ARROW (L+)
25.60		X		1	42.0	TYPE III ARROW (L+)
25.62		X		1	42.0	TYPE III ARROW (L+)
25.63	X			1	22.0	STOP
25.63	X			1	40.0	ROAD CONNECTION LIMIT LINE
25.64	X			1	42.0	TYPE III ARROW (R+)
25.69	X			1	42.0	TYPE III ARROW (R+)
26.52			X	1	42.0	TYPE III ARROW (R+)
26.56			X	1	42.0	TYPE III ARROW (R+)
26.59	X			1	22.0	STOP
26.59	X			1	40.0	ROAD CONNECTION LIMIT LINE
27.49			X	1	42.0	TYPE VI ARROW (R+)
27.54			X	1	42.0	TYPE VI ARROW (R+)
27.58			X	1	42.0	TYPE VI ARROW (R+)
28.56	X			1	22.0	STOP
28.56	X			1	30.0	ROAD CONNECTION LIMIT LINE
28.77	X			1	42.0	TYPE VI ARROW (L+)
28.82	X			1	42.0	TYPE VI ARROW (L+)
28.86	X			1	42.0	TYPE VI ARROW (L+)
29.77			X	1	42.0	TYPE III ARROW (R+)
29.81			X	1	42.0	TYPE III ARROW (R+)
29.82	X			1	22.0	STOP
29.82	X			1	40.0	ROAD CONNECTION LIMIT LINE
29.83			X	1	22.0	STOP
29.84			X	1	22.0	STOP
29.84			X	1	65.0	ROAD CONNECTION LIMIT LINE
29.84		X		1	42.0	TYPE III ARROW (L+)
29.88		X		1	42.0	TYPE III ARROW (L+)
34.41			X	1	42.0	TYPE III ARROW (R+)
34.49			X	1	42.0	TYPE III ARROW (R+)
34.51			X	1	22.0	STOP
34.51			X	1	40.0	ROAD CONNECTION LIMIT LINE
34.51		X		1	42.0	TYPE III ARROW (L+)
34.63		X		1	42.0	TYPE III ARROW (L+)
34.65-34.73		X		1	68.7	8" LINE
34.74		X		1	42.0	TYPE III ARROW (L+)
34.85		X		1	42.0	TYPE III ARROW (L+)
34.86	X			1	22.0	STOP
SUBTOTAL					1874.7	

THERMOPLASTIC PAVEMENT MARKING

PM	L+	Mid	R+	(N) EA	SQFT	REMARKS
34.86	X			1	40.0	ROAD CONNECTION LIMIT LINE
34.89	X			1	42.0	TYPE III ARROW (R+)
34.91		X		1	42.0	TYPE III ARROW (L+)
34.92		X		1	42.0	TYPE III ARROW (L+)
34.96		X		1	42.0	TYPE III ARROW (L+)
34.97		X		1	42.0	TYPE III ARROW (L+)
34.98	X			1	42.0	TYPE III ARROW (R+)
35.02		X		1	42.0	TYPE III ARROW (L+)
35.03		X		1	42.0	TYPE III ARROW (L+)
35.08	X			1	42.0	TYPE III ARROW (R+)
36.24			X	1	42.0	TYPE VI ARROW (R+)
36.28			X	1	42.0	TYPE VI ARROW (R+)
36.32			X	1	42.0	TYPE VI ARROW (R+)
SUBTOTAL					544.0	
TOTAL					2418.7	

REMOVE THERMOPLASTIC PAVEMENT MARKING

PM	L+	Mid	R+	(N) EA	SQFT	REMARKS
R24.70-36.40	X			11	33.0	DETAIL A
25.21			X	1	22.0	STOP
25.21			X	1	40.0	ROAD CONNECTION LIMIT LINE
25.22		X		1	42.0	TYPE III ARROW (L+)
25.25		X		1	42.0	TYPE III ARROW (L+)
25.31		X		1	42.0	TYPE III ARROW (L+)
25.34		X		1	42.0	TYPE III ARROW (L+)
25.35	X			1	22.0	STOP
25.35	X			1	40.0	ROAD CONNECTION LIMIT LINE
25.36	X			1	42.0	TYPE III ARROW (R+)
25.38	X			1	42.0	TYPE III ARROW (R+)
25.56		X		1	42.0	TYPE III ARROW (L+)
25.60		X		1	42.0	TYPE III ARROW (L+)
25.62		X		1	42.0	TYPE III ARROW (L+)
25.63	X			1	22.0	STOP
25.63	X			1	40.0	ROAD CONNECTION LIMIT LINE
25.64	X			1	42.0	TYPE III ARROW (R+)
25.69	X			1	42.0	TYPE III ARROW (R+)
26.52			X	1	42.0	TYPE III ARROW (R+)
26.56			X	1	42.0	TYPE III ARROW (R+)
26.59	X			1	22.0	STOP
26.59	X			1	40.0	ROAD CONNECTION LIMIT LINE
27.49			X	1	42.0	TYPE VI ARROW (R+)
27.54			X	1	42.0	TYPE VI ARROW (R+)
27.58			X	1	42.0	TYPE VI ARROW (R+)
28.56	X			1	22.0	STOP
SUBTOTAL					975.0	

PAVEMENT MARKER (RETROREFLECTIVE-RECESS)

POST MILE LIMITS	TYPE D	TYPE H	TYPE G
	EA	EA	EA
R24.70-36.40	5379	325	487
TOTAL	6191		

(N) REMOVE PAVEMENT MARKER

Rte	POST MILE LIMITS	EA
395	R24.7-36.4	6191

REMOVE THERMOPLASTIC PAVEMENT MARKING

PM	L+	Mid	R+	(N) EA	SQFT	REMARKS
28.56	X			1	30.0	ROAD CONNECTION LIMIT LINE
28.77	X			1	42.0	TYPE VI ARROW (L+)
28.82	X			1	42.0	TYPE VI ARROW (L+)
28.86	X			1	42.0	TYPE VI ARROW (L+)
29.77				1	42.0	TYPE III ARROW (R+)
29.81			X	1	42.0	TYPE III ARROW (R+)
29.82	X		X	1	22.0	STOP
29.82	X			1	40.0	ROAD CONNECTION LIMIT LINE
29.83				1	22.0	STOP
29.84			X	1	22.0	STOP
29.84			X	1	65.0	ROAD CONNECTION LIMIT LINE
29.84	X		X	1	42.0	TYPE III ARROW (L+)
29.88		X		1	42.0	TYPE III ARROW (L+)
34.41			X	1	42.0	TYPE III ARROW (R+)
34.49			X	1	42.0	TYPE III ARROW (R+)
34.51			X	1	22.0	STOP
34.51			X	1	40.0	ROAD CONNECTION LIMIT LINE
34.51		X		1	42.0	TYPE III ARROW (L+)
34.63		X		1	42.0	TYPE III ARROW (L+)
34.65-34.73		X		1	68.7	8" LINE
34.74		X		1	42.0	TYPE III ARROW (L+)
34.85		X		1	42.0	TYPE III ARROW (L+)
34.86		X		1	22.0	STOP
34.86		X		1	40.0	ROAD CONNECTION LIMIT LINE
34.89		X			42.0	TYPE III ARROW (R+)
34.91		X			42.0	TYPE III ARROW (L+)
34.92		X			42.0	TYPE III ARROW (L+)
34.96		X			42.0	TYPE III ARROW (L+)
34.97		X			42.0	TYPE III ARROW (L+)
34.98		X			42.0	TYPE III ARROW (R+)
35.02	X				42.0	TYPE III ARROW (L+)
35.03	X				42.0	TYPE III ARROW (L+)
35.08			X		42.0	TYPE III ARROW (R+)
36.24			X		42.0	TYPE VI ARROW (R+)
36.28			X		42.0	TYPE VI ARROW (R+)
36.32			X		42.0	TYPE VI ARROW (R+)
SUBTOTAL					1443.7	
TOTAL					2418.7	

PAVEMENT DELINEATION QUANTITIES

PDQ-1

REVISED BY | DATE REVISED
DENISE FUZERE' | KARLIE SMITH
CALCULATED-DESIGNED BY | CHECKED BY
FUNCTIONAL SUPERVISOR: LANCE BROWN

STATE OF CALIFORNIA - DEPARTMENT OF TRANSPORTATION
Caltrans MAINTENANCE

P:\proj1\02\4G140_plans\pse\24g140nc001.dgn

LAST REVISION 01-05-15 | DATE PLOTTED => 05-JAN-2015 | TIME PLOTTED => 10:27

Dist	COUNTY	ROUTE	POST MILES TOTAL PROJECT	SHEET No.	TOTAL SHEETS
02	Las	395	R24.7/36.4	12	24

Denise Fuzeré 01-05-15
REGISTERED CIVIL ENGINEER DATE

01-05-15
PLANS APPROVAL DATE

REGISTERED PROFESSIONAL ENGINEER DENISE FUZERE No. C69865 Exp. 09-30-16 CIVIL STATE OF CALIFORNIA

THE STATE OF CALIFORNIA OR ITS OFFICERS OR AGENTS SHALL NOT BE RESPONSIBLE FOR THE ACCURACY OR COMPLETENESS OF SCANNED COPIES OF THIS PLAN SHEET.

NOTES:

1. (N) NOT A SEPARATE PAY ITEM, FOR INFORMATION ONLY.
2. EXACT LOCATIONS OF REPLACE AC SURFACING AS DETERMINED BY THE ENGINEER.

ROADWAY QUANTITIES SUMMARY

POST MILE LIMITS	(N) LENGTH	(N) WIDTH	HMA (TYPE A)	TACK COAT	SHOULDER BACKING
PM - PM	LF	LF	TON	TON	TON
R24.70-R24.81	580.8	40-57			
R24.81-24.85	211.2	57-40			
24.85-25.10	1320.0	40-43			
25.10-25.13	158.4	43-45			
25.13-25.17	211.2	45-48			
25.17-25.28	580.8	48-52			
25.28-25.36	422.4	52-54			
25.36-25.38	105.6	54-52			
25.38-25.39	52.8	52-50			
25.39-25.50	580.8	50-43			
25.50-25.53	158.4	43-49			
25.53-25.60	369.6	49-53			
25.60-25.64	211.2	53-63			
25.64-25.65	52.8	63-59			
25.65-25.68	158.4	59-55			
25.68-25.69	52.8	55-52			
25.69-25.72	158.4	52-41			
25.72-26.16	2323.2	41-40	7342.0	31.7	706.1
26.16-26.20	211.2	40-41			
26.20-26.41	1108.8	41-50			
26.41-26.49	422.4	50-42			
26.49-26.50	52.8	42-51			
26.50-26.52	105.6	51-56			
26.52-26.55	158.4	56-59			
26.55-26.57	105.6	59-61			
26.57-26.58	52.8	61-65			
26.58-26.60	105.6	65-61			
26.60-26.64	211.2	61-55			
26.64-27.65	5332.8	55-50			
27.65-27.66	52.8	50-48			
27.66-27.68	105.6	48-44			
27.68-27.70	105.6	44-42			
27.70-27.99	1531.2	42-39			
27.99-28.05	316.8	39-40			
28.05-28.54	2587.2	40-41			
28.54-28.64	528.0	41-42			
28.64-28.66	105.6	42-48			
28.66-28.68	105.6	48-50			
SUBTOTAL			7342.0	31.7	706.1

ROADWAY QUANTITIES SUMMARY

POST MILE LIMITS	(N) LENGTH	(N) WIDTH	HMA (TYPE A)	TACK COAT	SHOULDER BACKING
PM - PM	LF	LF	TON	TON	TON
28.68-28.69	52.8	50-52			
28.69-28.73	211.2	52-55			
28.73-28.78	264.0	55-57			
28.78-29.83	5544.0	57-65			
29.83-29.87	211.2	65-59			
29.87-29.95	422.4	59-57			
29.95-25.98	158.4	57-54			
25.98-30.03	264.0	54-51			
30.03-30.06	158.4	51-48			
30.06-30.09	158.4	48-46			
30.09-30.12	158.4	46-44			
30.12-30.48	1990.8	44-42			
30.48-30.60	633.6	42-44			
30.60-31.00	2112.0	44-40			
31.00-31.08	422.4	40-58			
31.08-31.32	1267.2	58-41			
31.32-31.56	1267.2	41-39			
31.56-34.12	13516.8	39-41	14,826.0	64.1	1369.6
34.12-34.34	1161.6	41-40			
34.34-34.36	105.6	40-44			
34.36-34.40	211.2	44-48			
34.40-34.46	316.8	48-56			
34.46-34.51	264.0	56-65			
34.51-34.52	52.8	65-61			
34.52-34.70	950.4	61-52			
34.70-34.80	528.0	52-57			
34.80-34.83	158.4	57-75			
34.83-34.98	792.0	75-64			
34.98-35.02	211.2	64-62			
35.02-35.05	158.4	62-61			
35.05-35.07	105.6	61-57			
35.07-35.10	158.4	57-56			
35.10-36.23	5966.4	56-54			
36.23-36.30	369.6	54-50			
36.30-36.34	211.2	50-47			
36.34-36.38	211.2	47-43			
36.38-36.40	105.6	43-41			
DRIVEWAYS AND ROAD CONNECTIONS			683.7	7.0	102.5
TOTAL			22,851.7	102.8	2178.2

REVISED BY | DATE REVISED

DENISE FUZERE' | KARLIE SMITH

CALCULATED-DESIGNED BY | CHECKED BY

FUNCTIONAL SUPERVISOR | LANCE BROWN

Caltrans® STATE OF CALIFORNIA - DEPARTMENT OF TRANSPORTATION MAINTENANCE

P:\proj1\02\4G140_plans\pse\24g140pa001.dgn

SUMMARY OF QUANTITIES

Q-1

LAST REVISION 01-05-15 | DATE PLOTTED => 05-JAN-2015 TIME PLOTTED => 10:27

Dist	COUNTY	ROUTE	POST MILES TOTAL PROJECT	SHEET No.	TOTAL SHEETS
02	Las	395	R24.7/36.4	13	24

Denise Fuzeré 01-05-15
REGISTERED CIVIL ENGINEER DATE

01-05-15
PLANS APPROVAL DATE

REGISTERED PROFESSIONAL ENGINEER DENISE FUZERE No. C69865 Exp. 09-30-16 CIVIL STATE OF CALIFORNIA

THE STATE OF CALIFORNIA OR ITS OFFICERS OR AGENTS SHALL NOT BE RESPONSIBLE FOR THE ACCURACY OR COMPLETENESS OF SCANNED COPIES OF THIS PLAN SHEET.

NOTES:

1. (N) NOT A SEPARATE PAY ITEM, FOR INFORMATION ONLY.
2. EXACT LOCATIONS OF REPLACE AC SURFACING AS DETERMINED BY THE ENGINEER.

RUMBLE STRIP (GROUND-IN INDENDATIONS)

POST MILE LIMITS	DIRECTION			CENTERLINE	SHOULDER
	SB	MIDDLE	NB	Sta	Sta
R24.70-R24.72	X		X	0	2
R24.72-24.89	X		X	0	18
24.89-25.19	X		X	0	32
25.19-25.21	X			0	1
25.21-25.23	X			0	1
25.23-25.25	X			0	1
25.25-25.31	X			0	3
25.31-25.35				0	0
25.35-25.38				0	0
25.38-25.39				0	0
25.39-25.55				0	0
25.55-25.58				0	0
25.58-25.60				0	0
25.60-25.64				0	0
25.64-25.70			X	0	3
25.70-25.72			X	0	1
25.72-25.76	X		X	0	4
25.76-25.86	X		X	0	11
25.86-25.90	X	X		2	43
25.90-26.17	X	X	X	14	44
26.17-26.21		X		2	0
26.21-26.41	X	X	X	11	21
26.41-26.47		X		3	0
26.47-26.53		X		3	0
26.53-26.55		X		1	0
26.55-26.59		X		2	0
26.59-26.62		X		2	0
26.62-27.58	X	X	X	51	101
27.58-27.73	X	X	X	8	16
27.73-27.87	X	X	X	7	15
27.87-27.98	X	X	X	6	12
27.98-28.04		X		3	0
28.04-28.32	X	X	X	15	30
28.32-28.50	X	X	X	10	19
28.50-28.52		X		1	0
28.52-28.55		X		2	0
28.55-28.65	X	X	X	5	11
28.65-28.76	X	X	X	6	12
28.76-29.74	X	X	X	52	103
29.74-29.77	X	X		2	2
29.77-29.80		X		2	0
29.80-29.83		X		2	0
29.83-29.86	X	X	X	2	3
29.86-29.90	X	X	X	2	4
SUBTOTAL				216	513

RUMBLE STRIP (GROUND-IN INDENDATIONS)

POST MILE LIMITS	DIRECTION			CENTERLINE	SHOULDER
	SB	MIDDLE	NB	Sta	Sta
29.90-30.13	X	X	X	12	24
30.13-30.16		X	X	2	2
30.16-30.28	X	X	X	6	13
30.28-30.57	X	X	X	15	31
30.57-30.60		X	X	2	2
30.60-30.95	X	X	X	18	37
30.95-30.98		X	X	2	2
30.98-31.11	X	X	X	7	14
31.11-31.13	X	X		1	1
31.13-31.27	X	X	X	7	15
31.27-31.29		X	X	1	1
31.29-31.39		X	X	5	5
31.39-32.18	X	X	X	42	83
32.18-32.21				0	0
32.21-32.56	X	X	X	18	37
32.56-32.59		X	X	2	2
32.59-32.73	X	X	X	7	15
32.73-32.76		X	X	2	2
32.76-33.20	X	X	X	23	46
33.20-33.30		X	X	5	5
33.30-33.40	X	X	X	5	11
33.40-33.52	X	X	X	6	13
33.52-33.70	X	X	X	10	19
33.70-34.22	X	X	X	27	55
34.22-34.25		X	X	2	2
34.25-34.33	X	X	X	4	8
34.33-34.36	X	X	X	2	3
34.36-34.40		X		2	0
34.40-34.50		X		5	0
34.50-34.53		X		2	0
34.53-34.63		X		5	0
34.63-34.71	X	X	X	4	8
34.71-34.82	X	X	X	6	12
34.82-34.85		X		2	0
34.85-34.97		X		6	0
34.97-35.05	X	X		4	0
35.05-35.25	X	X	X	11	21
35.25-35.68	X	X	X	23	45
35.68-35.75		X	X	4	4
35.75-35.99	X	X	X	13	25
35.99-36.02	X	X	X	2	3
36.02-36.29	X	X	X	14	29
36.29-36.39	X	X	X	5	11
36.39-36.40	X	X	X	0	1
SUBTOTAL				341	607
TOTAL				557	1120

GUARDRAIL QUANTITIES

PM TO PM	SIDE Rt/Lt	ADJUST GUARDRAIL	RECONSTRUCT TERMINAL SYSTEM (TYPE SRT)	TREATED WOOD WASTE
		LF	EA	LB
R24.70	Rt	12.5	1	20,000
R24.70	Lt	12.5	1	
26.15 TO 26.16	Rt	12.5	1	
26.15 TO 26.16	Lt	12.5	1	
26.22 TO 26.23	Rt	96.5	1	
26.22 TO 26.23	Lt	109.5	1	
27.67 TO 27.81	Lt	684	2	
27.97 TO 27.99	Rt	62.5	1	
27.97 TO 27.99	Lt	62.5	1	
28.05 TO 28.07	Rt	72.5	1	
28.05 TO 28.07	Lt	72.5	1	
TOTAL		1210	12	20,000

REPLACE ASPHALT CONCRETE SURFACING

POST MILE LIMITS	(N) No. OF DIGOUTS	(N) Avg LENGTH	(N) WIDTH	(N) DEPTH	REPLACE AC SURFACING
PM - PM		LF	LF	LF	CY
R24.70 - 25.00	5	100	4	0.33	24.5
25.00 - 26.00	10	100	4	0.33	49
26.00 - 27.00	10	100	4	0.33	49
27.00 - 28.00	10	100	4	0.33	49
28.00 - 29.00	10	100	4	0.33	49
29.00 - 30.00	10	100	4	0.33	49
30.00 - 31.00	10	100	4	0.33	49
31.00 - 32.00	10	100	4	0.33	49
32.00 - 33.00	10	100	4	0.33	49
33.00 - 34.00	10	100	4	0.33	49
34.00 - 36.40	5	100	4	0.33	24.5
TOTAL					490

COLD PLANE ASPHALT CONCRETE PAVEMENT

POST MILE	(N) LENGTH	(N) WIDTH	AREA	REMARKS
	LF	LF	SQYD	
R24.70	110	40	489	MAINLINE CONFORM TAPER
25.21	8	50	44	RIVERVIEW Dr CONFORM TAPER - Rt
25.34	8	35	31	CAROL Dr CONFORM TAPER - Lt
25.63	8	30	27	RACHEL Dr CONFORM TAPER - Lt
26.59	8	40	36	LAVER CROSSING CONFORM TAPER - Rt
28.56	8	30	27	COWBOY JOE Rd CONFORM TAPER - Lt
29.84	8	30	27	GARNIER Rd CONFORM TAPER - Rt
29.84	8	25	22	GARNIER Rd CONFORM TAPER - Lt
34.51	8	30	27	N HERLONG ACCESS Rd CONFORM TAPER - Rt
34.91	8	500	444	BUSINESS DRIVEWAY
34.95	8	20	18	LEWIS Ln CONFORM TAPER - Rt
36.40	40	28	124	MAINLINE CONFORM TAPER
		TOTAL	1316	

EXISTING LOOP DETECTORS TO REMAIN IN PLACE AND OPERATIONAL (N)

ID No.	ELEMENT	LOCATION Co-Rte-PM	DESCRIPTION
#270 (B)	PROFILE	Las-395-PM 29.72	605' S OF GARNIER ROAD (2 LOOPS)
#289 (A)	CONTROL	Las-395-PM 31.31	1.5 MILE N OF GARNIER ROAD (2 LOOPS)

SUMMARY OF QUANTITIES

Q-2

REVISED BY	DATE REVISED

DENISE FUZERE' — CALCULATED-DESIGNED BY
KARLIE SMITH — CHECKED BY
LANCE BROWN — FUNCTIONAL SUPERVISOR

STATE OF CALIFORNIA - DEPARTMENT OF TRANSPORTATION
Caltrans® MAINTENANCE

P:\proj1\02\4G140_plans\pse\24g140pa002.dgn

LAST REVISION 01-05-15 | DATE PLOTTED => 05-JAN-2015 | TIME PLOTTED => 10:27

M

Maint	MAINTENANCE
Max	MAXIMUM
MB	METAL BEAM
MBB	METAL BEAM BARRIER
MBGR	METAL BEAM GUARD RAILING
Med	MEDIAN
MGS	MIDWEST GUARDRAIL SYSTEM
MH	MANHOLE
Min	MINIMUM
Misc	MISCELLANEOUS
Misc I & S	MISCELLANEOUS IRON AND STEEL
Mkr	MARKER
Mod	MODIFIED, MODIFY
Mon	MONUMENT
MP	METAL PLATE
MPGR	METAL PLATE GUARD RAILING
MR	MOVEMENT RATING
MSE	MECHANICALLY STABILIZED EMBANKMENT
Mt	MOUNTAIN, MOUNT
Mtl	MATERIAL
MVP	MAINTENANCE VEHICLE PULLOUT

N

N	NORTH
NB	NORTHBOUND
No.	NUMBER (MUST HAVE PERIOD)
Nos.	NUMBERS (MUST HAVE PERIOD)
NPS	NOMINAL PIPE SIZE
NS	NEAR SIDE
NSP	NEW STANDARD PLAN
NTS	NOT TO SCALE

O

Oblr	OBLITERATE
OC	OVERCROSSING
OD	OUTSIDE DIAMETER
OF	OUTSIDE FACE
OG	ORIGINAL GROUND
OGAC	OPEN GRADED ASPHALT CONCRETE
OGFC	OPEN GRADED FRICTION COURSE
OH	OVERHEAD
OHWM	ORDINARY HIGH WATER MARK
O-O	OUT TO OUT
Opp	OPPOSITE
OSD	OVERSIDE DRAIN

P

P	PAGE
PAP	PERFORATED ALUMINUM PIPE
PB	PULL BOX
PC	POINT OF CURVATURE, PRECAST
PCC	POINT OF COMPOUND CURVE, PORTLAND CEMENT CONCRETE
PCMS	PORTABLE CHANGEABLE MESSAGE SIGN
PCP	PERFORATED CONCRETE PIPE, PRESTRESSED CONCRETE PIPE
PCVC	POINT OF COMPOUND VERTICAL CURVE
PEC	PERMIT TO ENTER AND CONSTRUCT
Ped	PEDESTRIAN
Ped OC	PEDESTRIAN OVERCROSSING
Ped UC	PEDESTRIAN UNDERCROSSING
Perm Mtl	PERMEABLE MATERIAL

P continued

PG	PROFILE GRADE
PI	POINT OF INTERSECTION
PJP	PARTIAL JOINT PENETRATION
Pkwy	PARKWAY
ℙ,PL	PLATE
P/L	PROPERTY LINE
PM	POST MILE, TIME FROM NOON TO MIDNIGHT
PN	PAVING NOTCH
POC	POINT OF HORIZONTAL CURVE
POT	POINT OF TANGENT
POVC	POINT OF VERTICAL CURVE
PP	PIPE PILE, PLASTIC PIPE, POWER POLE
PPL	PREFORMED PERMEABLE LINER
PPP	PERFORATED PLASTIC PIPE
PRC	POINT OF REVERSE CURVE
PRF	PAVEMENT REINFORCING FABRIC
PRVC	POINT OF REVERSE VERTICAL CURVE
PS&E	PLANS, SPECIFICATIONS AND ESTIMATES
PS, P/S	PRESTRESSED
PSP	PERFORATED STEEL PIPE
PT	POINT OF TANGENCY
PVC	POLYVINYL CHLORIDE
Pvmt	PAVEMENT

Q

Qty	QUANTITY

R

R	RADIUS
R & D	REMOVE AND DISPOSE
R & S	REMOVE AND SALVAGE
R/C	RATE OF CHANGE
RCA	REINFORCED CONCRETE ARCH
RCB	REINFORCED CONCRETE BOX
RCP	REINFORCED CONCRETE PIPE
RCPA	REINFORCED CONCRETE PIPE ARCH
Rd	ROAD
Reinf	REINFORCED, REINFORCEMENT, REINFORCING
Rel	RELOCATE
Repl	REPLACEMENT
Ret	RETAINING
Rev	REVISED, REVISION
Rdwy	ROADWAY
RHMA	RUBBERIZED HOT MIX ASPHALT
Riv	RIVER
RM	ROAD-MIXED
RP	RADIUS POINT, REFERENCE POINT
RR	RAILROAD
RSP	ROCK SLOPE PROTECTION, REVISED STANDARD PLAN
Rt	RIGHT
Rte	ROUTE
RW	REDWOOD, RETAINING WALL
R/W	RIGHT OF WAY
Rwy	RAILWAY

S

S	SOUTH, SUPPLEMENT
SAE	STRUCTURE APPROACH EMBANKMENT
Salv	SALVAGE
SAPP	STRUCTURAL ALUMINUM PLATE PIPE
SB	SOUTHBOUND
SC	SAND CUSHION
SCSP	SLOTTED CORRUGATED STEEL PIPE
SD	STORM DRAIN
Sec	SECOND, SECTION
Sep	SEPARATION
SG	SUBGRADE
Shld	SHOULDER
Sht	SHEET
Sim	SIMILAR
℄	STATION LINE
SM	SELECTED MATERIAL
Spec	SPECIAL, SPECIFICATIONS
SPP	SLOTTED PLASTIC PIPE
SS	SLOPE STAKE
SSBM	STRAP AND SADDLE BRACKET METHOD
SSD	STRUCTURAL SECTION DRAIN
SSPA	STRUCTURAL STEEL PLATE ARCH
SSPP	STRUCTURAL STEEL PLATE PIPE
SSPPA	STRUCTURAL STEEL PLATE PIPE ARCH
SSRP	STEEL SPIRAL RIB PIPE
St	STREET
Sta	STATION
STBB	SINGLE THRIE BEAM BARRIER
Std	STANDARD
Str	STRUCTURE
Surf	SURFACING
SW	SIDEWALK, SOUND WALL
Swr	SEWER
Sym	SYMMETRICAL
S4S	SURFACE 4 SIDES

T

T	SEMI-TANGENT
Tan	TANGENT
TBB	THRIE BEAM BARRIER
Tbr	TIMBER
TC	TOP OF CURB
TCB	TRAFFIC CONTROL BOX
TCE	TEMPORARY CONSTRUCTION EASEMENT
Tel	TELEPHONE
Temp	TEMPORARY
TG	TOP OF GRADE
Tot	TOTAL
TP	TELEPHONE POLE
TPB	TREATED PERMEABLE BASE
TPM	TREATED PERMEABLE MATERIAL
Trans	TRANSITION

T continued

TS	TRANSVERSE, TRAFFIC SIGNAL, TUBULAR STEEL
Typ	TYPICAL

U

UC	UNDERCROSSING
UD	UNDERDRAIN
UG	UNDERGROUND
UON	UNLESS OTHERWISE NOTED
UP	UNDERPASS

V

V	VALVE, DESIGN SPEED
Var	VARIABLE, VARIES
VC	VERTICAL CURVE
VCP	VITRIFIED CLAY PIPE
Vert	VERTICAL
Via	VIADUCT
Vol	VOLUME

W

W	WEST, WIDTH
WB	WESTBOUND
WH	WEEP HOLE
WM	WIRE MESH
WS	WATER SURFACE
WSP	WELDED STEEL PIPE
Wt	WEIGHT
WV	WATER VALVE
WW	WINGWALL
WWLOL	WINGWALL LAYOUT LINE

X

X Sec	CROSS SECTION
Xing	CROSSING

Y

Yr	YEAR
Yrs	YEARS

Dist	COUNTY	ROUTE	POST MILES TOTAL PROJECT	SHEET No.	TOTAL SHEETS
02	Las	395	R24.7/36.4	14	24

Grace M. Tsushima
REGISTERED CIVIL ENGINEER

July 19, 2013
PLANS APPROVAL DATE

REGISTERED PROFESSIONAL ENGINEER Grace M. Tsushima No. C49814 Exp. 9-30-14 CIVIL STATE OF CALIFORNIA

THE STATE OF CALIFORNIA OR ITS OFFICERS OR AGENTS SHALL NOT BE RESPONSIBLE FOR THE ACCURACY OR COMPLETENESS OF SCANNED COPIES OF THIS PLAN SHEET.

TO ACCOMPANY PLANS DATED 01-05-15

UNIT OF MEASUREMENT SYMBOLS:

Some of the symbols used in the project plan quantity tables and in the Bid Item List are:

TABLE A

SYMBOL USED	DEFINITIONS
ACRE	ACRE
CF	CUBIC FOOT
CY	CUBIC YARD
EA	EACH
GAL	GALLON
LB	POUND
LF	LINEAR FOOT
SQFT	SQUARE FOOT
SQYD	SQUARE YARD
STA	100 FEET
TAB	TABLET
TON	2,000 POUNDS

Some of the symbols used in the plans other than in the project plan quantity tables are:

TABLE B

SYMBOL USED	DEFINITIONS
ksi	KIPS PER SQUARE INCH
ksf	KIPS PER SQUARE FOOT
psi	POUNDS PER SQUARE INCH
psf	POUNDS PER SQUARE FOOT
lb/ft^3, pcf	POUNDS PER CUBIC FOOT
tsf	TONS PER SQUARE FOOT
mph, MPH *	MILES PER HOUR
ø	NOMINAL DIAMETER
oz	OUNCE
lb	POUND
kip	1,000 POUNDS
cal	CALORIE
ft	FOOT OR FEET
gal	GALLON

* For use on a sign panel only

STATE OF CALIFORNIA
DEPARTMENT OF TRANSPORTATION

ABBREVIATIONS (SHEET 2 OF 2)

NO SCALE

RSP A10B DATED JULY 19, 2013 SUPERSEDES STANDARD PLAN A10B DATED MAY 20, 2011 - PAGE 2 OF THE STANDARD PLANS BOOK DATED 2010.

REVISED STANDARD PLAN RSP A10B

2010 REVISED STANDARD PLAN RSP A10B

DATE PLOTTED => 05-JAN-2015
TIME PLOTTED => 10:27

Dist	COUNTY	ROUTE	POST MILES TOTAL PROJECT	SHEET No.	TOTAL SHEETS
02	Las	395	R24.7/36.4	15	24

REGISTERED CIVIL ENGINEER

July 19, 2013
PLANS APPROVAL DATE

REGISTERED PROFESSIONAL ENGINEER Roberta L. McLaughlin No. C40375 Exp. 3-31-15 CIVIL STATE OF CALIFORNIA

THE STATE OF CALIFORNIA OR ITS OFFICERS OR AGENTS SHALL NOT BE RESPONSIBLE FOR THE ACCURACY OR COMPLETENESS OF SCANNED COPIES OF THIS PLAN SHEET.

TO ACCOMPANY PLANS DATED 01-05-15

EXIT RAMP NEUTRAL AREA (GORE) TREATMENT

DETAIL 36

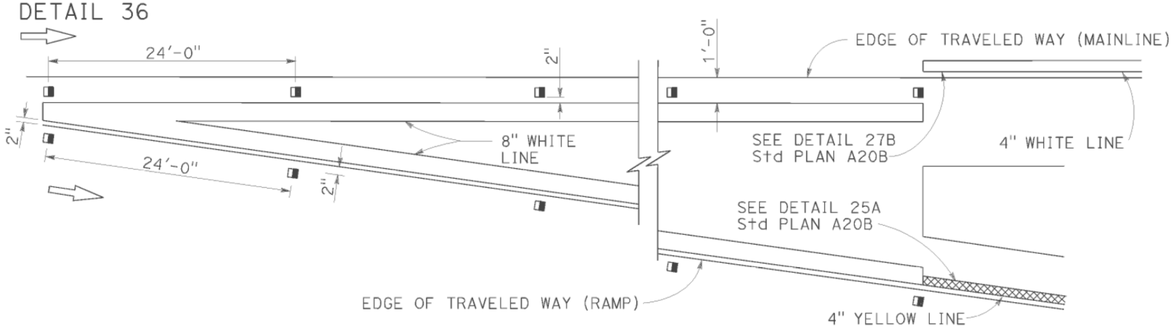

ENTRANCE RAMP NEUTRAL AREA (MERGE) TREATMENT

DETAIL 36A

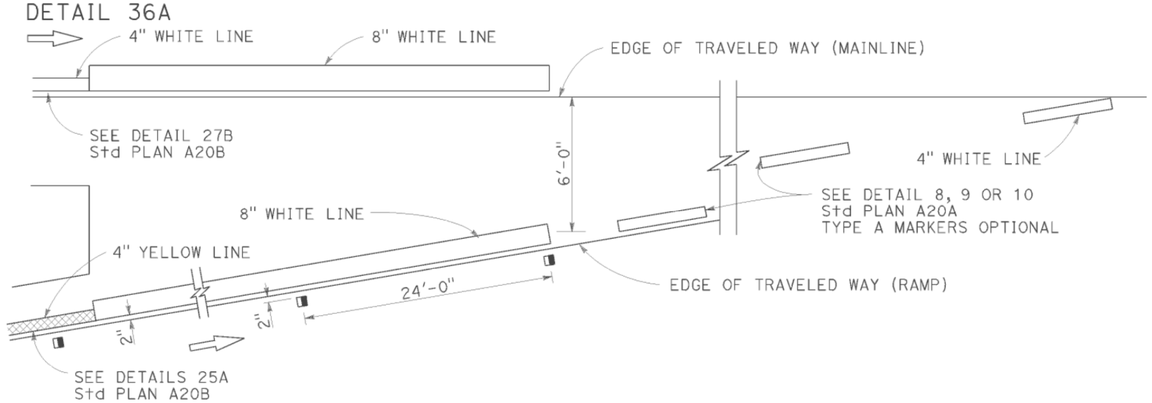

ENTRANCE RAMP NEUTRAL AREA (ACCELERATION LANE) TREATMENT

DETAIL 36B

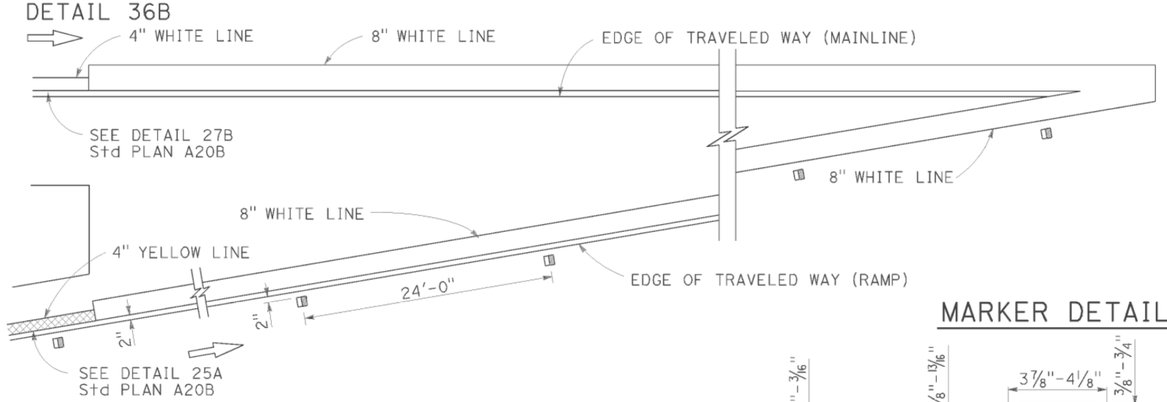

MARKER DETAILS

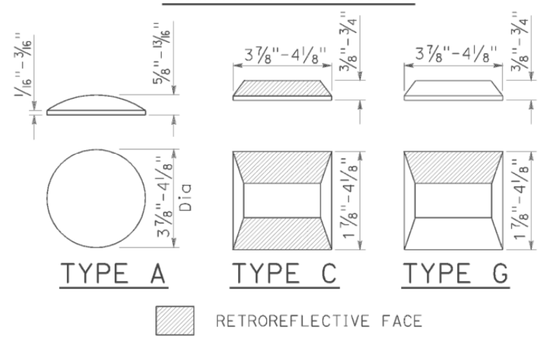

RETROREFLECTIVE FACE

LEGEND:

MARKERS

- TYPE A WHITE NON-REFLECTIVE
- TYPE C RED-CLEAR RETROREFLECTIVE
- TYPE G ONE-WAY CLEAR RETROREFLECTIVE

LANE DROP AT EXIT RAMPS

DETAIL 37

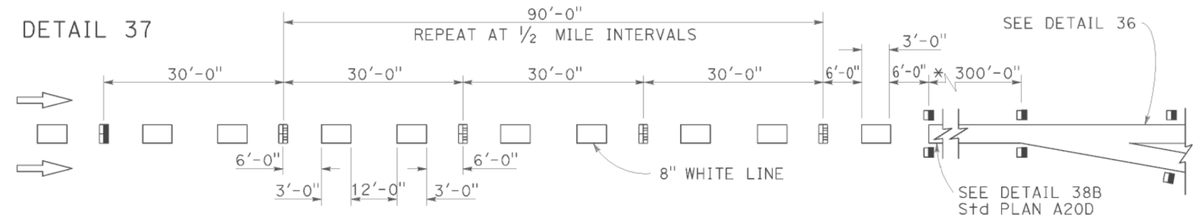

DETAIL 37A

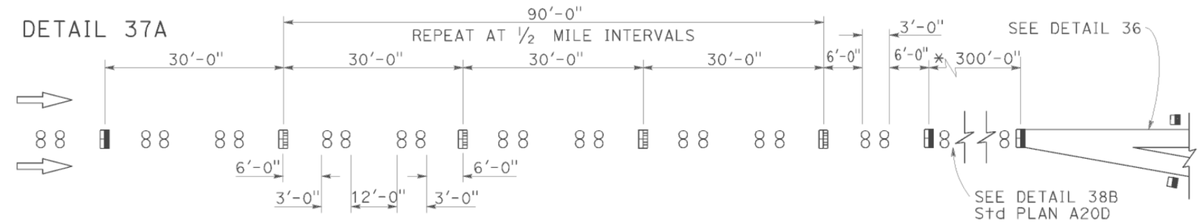

* The solid channelizing line shown may be omitted on short auxiliary lanes where weaving length is critical.

LANE DROP AT INTERSECTIONS

DETAIL 37B

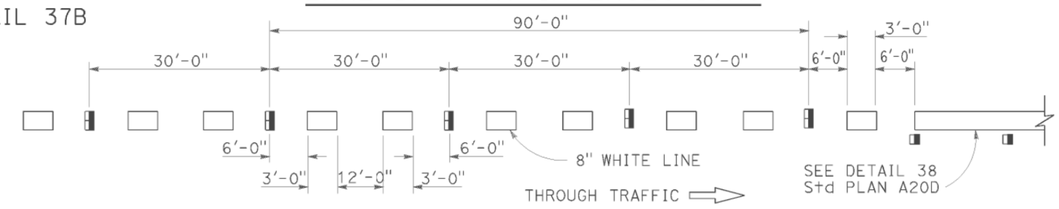

DETAIL 37C

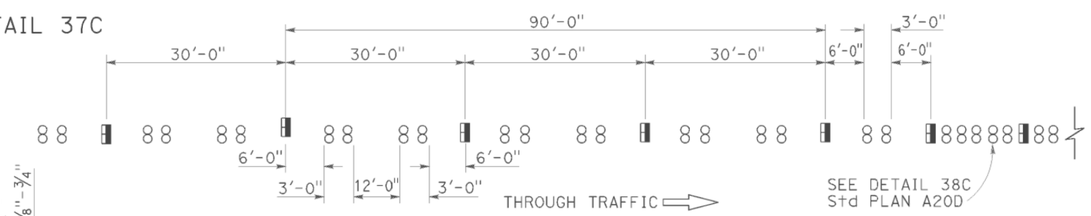

STATE OF CALIFORNIA
DEPARTMENT OF TRANSPORTATION

PAVEMENT MARKERS AND TRAFFIC LINE TYPICAL DETAILS

NO SCALE

RSP A20C DATED JULY 19, 2013 SUPERSEDES STANDARD PLAN A20C DATED MAY 20, 2011 - PAGE 11 OF THE STANDARD PLANS BOOK DATED 2010.

REVISED STANDARD PLAN RSP A20C

2010 REVISED STANDARD PLAN RSP A20C

DATE PLOTTED => 05-JAN-2015
TIME PLOTTED => 10:27

Dist	COUNTY	ROUTE	POST MILES TOTAL PROJECT	SHEET No.	TOTAL SHEETS
02	Las	395	R24.7/36.4	16	24

REGISTERED CIVIL ENGINEER

April 20, 2012
PLANS APPROVAL DATE

REGISTERED PROFESSIONAL ENGINEER
Roberta L. McLaughlin
No. C40375
Exp. 3-31-13
CIVIL
STATE OF CALIFORNIA

THE STATE OF CALIFORNIA OR ITS OFFICERS OR AGENTS SHALL NOT BE RESPONSIBLE FOR THE ACCURACY OR COMPLETENESS OF SCANNED COPIES OF THIS PLAN SHEET.

TO ACCOMPANY PLANS DATED 01-05-15

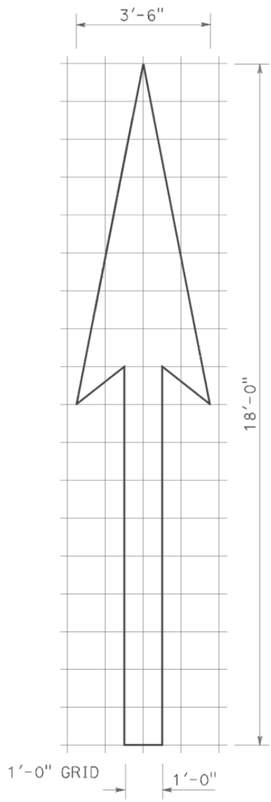

A=25 ft^2

TYPE I 18'-0" ARROW

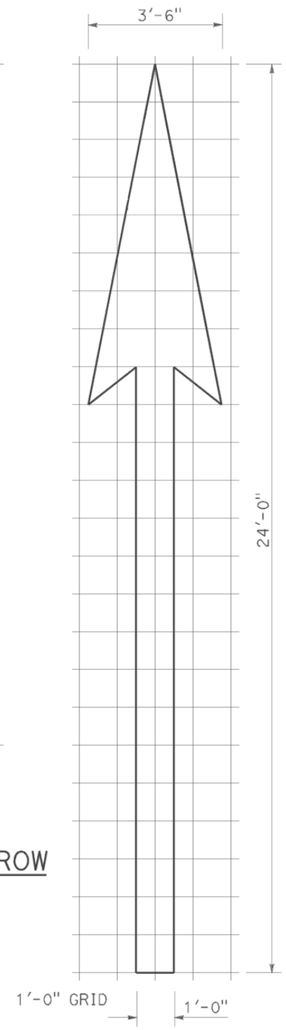

A=31 ft^2

TYPE I 24'-0" ARROW

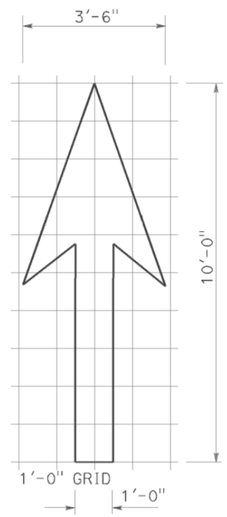

A=14 ft^2

TYPE I 10'-0" ARROW

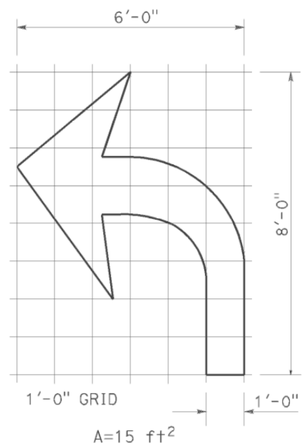

A=15 ft^2

TYPE IV (L) ARROW

(For Type IV (R) arrow, use mirror image)

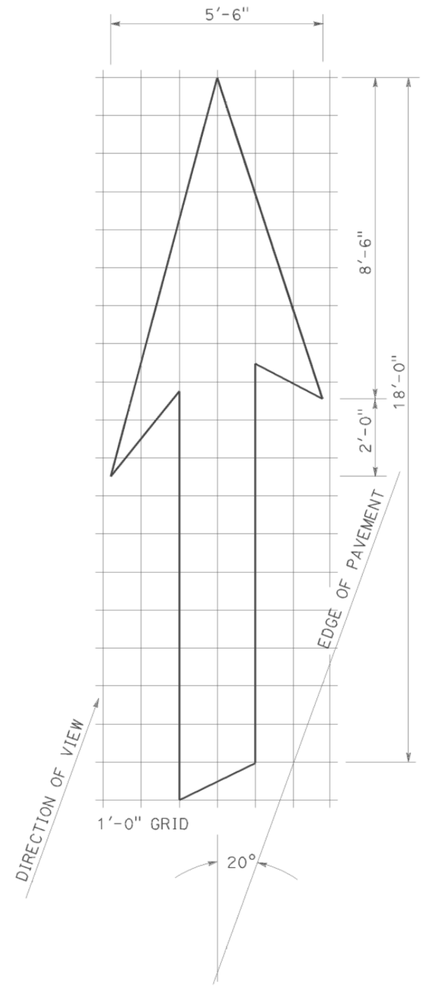

A=42 ft^2

TYPE VI ARROW

Right lane drop arrow
(For left lane, use mirror image)

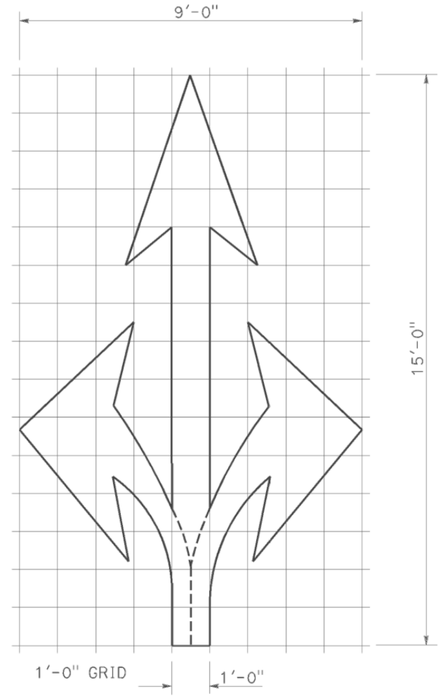

A=36 ft^2

TYPE VIII ARROW

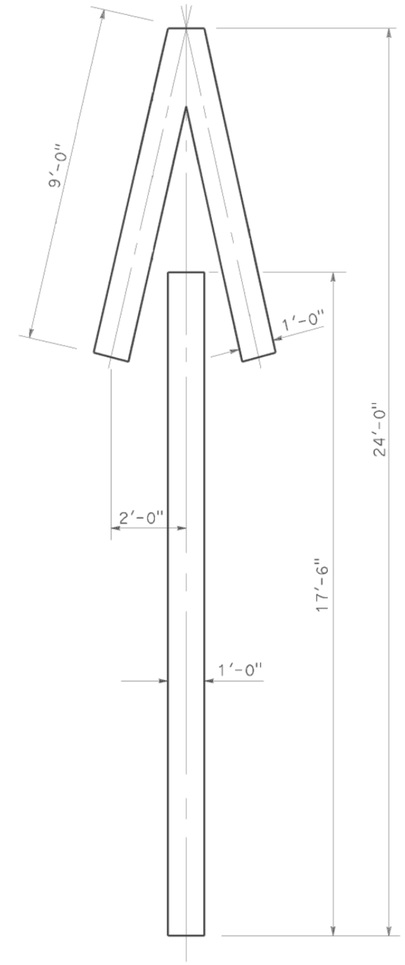

A=33 ft^2

TYPE V ARROW

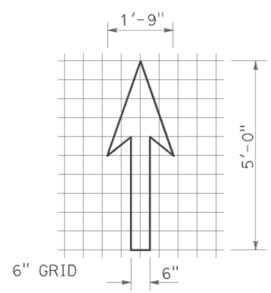

A=3.5 ft^2

BIKE LANE ARROW

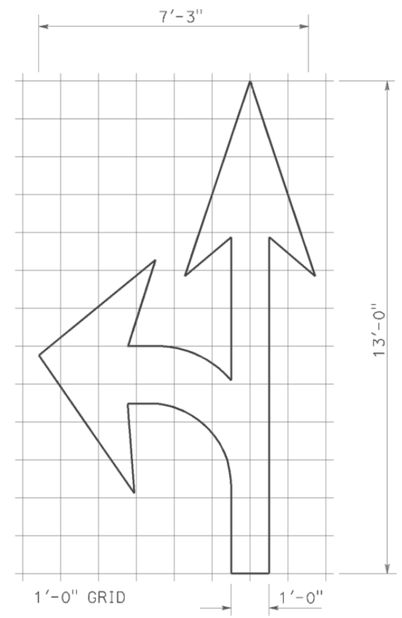

A=27 ft^2

TYPE VII (L) ARROW

(For Type VII (R) arrow, use mirror image)

NOTE:
Minor variations in dimensions may be accepted by the Engineer.

STATE OF CALIFORNIA
DEPARTMENT OF TRANSPORTATION

PAVEMENT MARKINGS ARROWS

NO SCALE

RSP A24A DATED APRIL 20, 2012 SUPERSEDES STANDARD PLAN A24A DATED MAY 20, 2011 - PAGE 13 OF THE STANDARD PLANS BOOK DATED 2010.

REVISED STANDARD PLAN RSP A24A

2010 REVISED STANDARD PLAN RSP A24A

DATE PLOTTED => 05-JAN-2015
TIME PLOTTED => 10:27

Dist	COUNTY	ROUTE	POST MILES TOTAL PROJECT	SHEET No.	TOTAL SHEETS
02	Las	395	R24.7/36.4	17	24

REGISTERED CIVIL ENGINEER

July 20, 2012
PLANS APPROVAL DATE

REGISTERED PROFESSIONAL ENGINEER
Roberta L. McLaughlin
No. C40375
Exp. 3-31-13
CIVIL
STATE OF CALIFORNIA

THE STATE OF CALIFORNIA OR ITS OFFICERS OR AGENTS SHALL NOT BE RESPONSIBLE FOR THE ACCURACY OR COMPLETENESS OF SCANNED COPIES OF THIS PLAN SHEET.

TO ACCOMPANY PLANS DATED 01-05-15

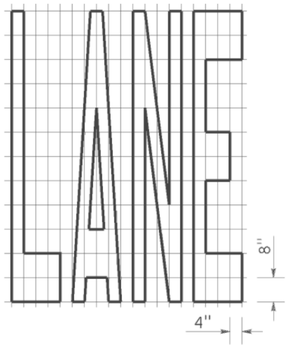

A=24 ft^2

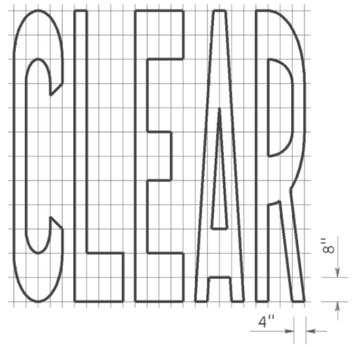

A=27 ft^2

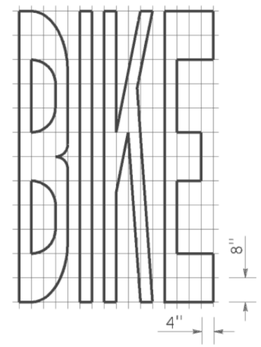

A=21 ft^2

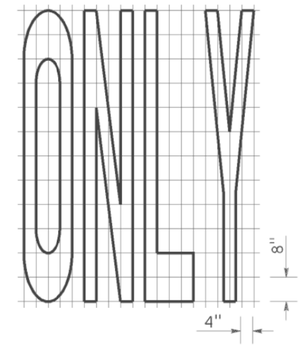

A=22 ft^2

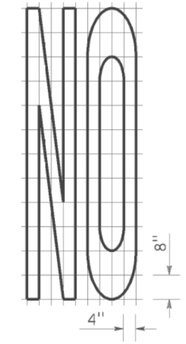

A=14 ft^2

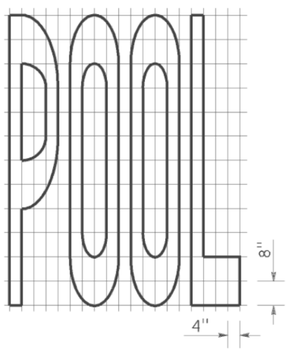

A=23 ft^2

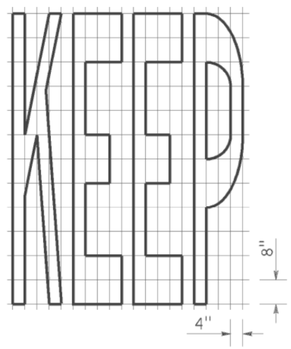

A=24 ft^2

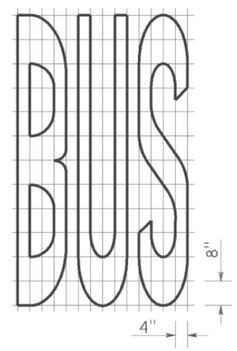

A=20 ft^2

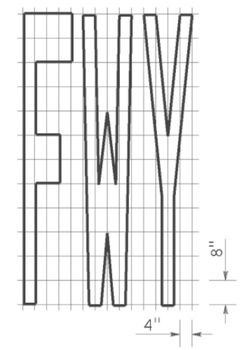

A=16 ft^2

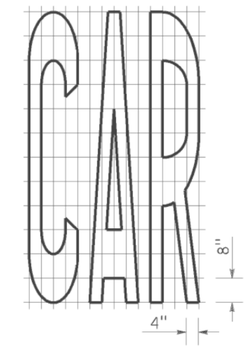

A=17 ft^2

WORD MARKINGS			
ITEM	ft^2	ITEM	ft^2
LANE	24	NO	14
POOL	23	BIKE	21
CAR	17	BUS	20
CLEAR	27	ONLY	22
KEEP	24	FWY	16

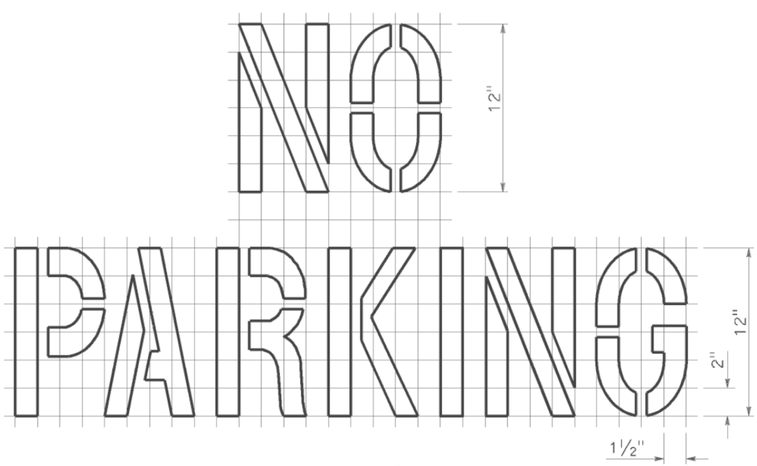

A=2 ft^2
See Notes 6 and 7

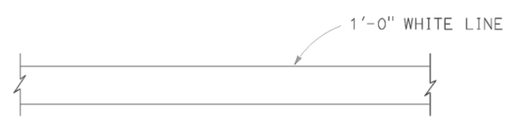

LIMIT LINE (STOP LINE)

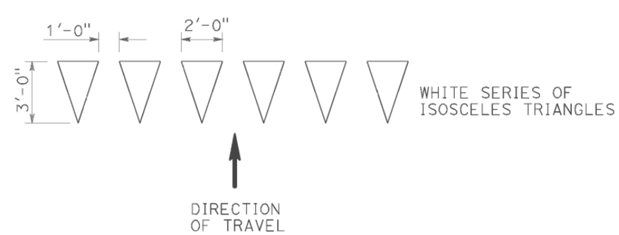

YIELD LINE

NOTES:

1. If a message consists of more than one word, it should read "UP", i.e., the first word should be nearest the driver.
2. The space between words should be at least four times the height of the characters for low speed roads, but not more than ten times the height of the characters. The space may be reduced appropriately where there is limited space because of local conditions.
3. Minor variations in dimensions may be accepted by the Engineer.
4. Portions of a letter, number or symbol may be separated by connecting segments not to exceed 2" in width.
5. The words "NO PARKING" pavement marking is to be used for parking facilities. For typical locations of markings, see Standard Plans A90A and A90B.
6. The words "NO PARKING", shall be painted in white letters no less than 1'-0" high on a contrasting background and located so that it is visible to traffic enforcement officials.

STATE OF CALIFORNIA
DEPARTMENT OF TRANSPORTATION

PAVEMENT MARKINGS
WORDS, LIMIT AND YIELD LINES

NO SCALE

RSP A24E DATED JULY 20, 2012 SUPERSEDES STANDARD PLAN A24E
DATED MAY 20, 2011 - PAGE 17 OF THE STANDARD PLANS BOOK DATED 2010.

REVISED STANDARD PLAN RSP A24E

2010 REVISED STANDARD PLAN RSP A24E

DATE PLOTTED => 05-JAN-2015
TIME PLOTTED => 10:27

Dist	COUNTY	ROUTE	POST MILES TOTAL PROJECT	SHEET No.	TOTAL SHEETS
02	Las	395	R24.7/36.4	18	24

REGISTERED CIVIL ENGINEER

July 20, 2012
PLANS APPROVAL DATE

REGISTERED PROFESSIONAL ENGINEER
Roberta L. McLaughlin
No. C40375
Exp. 3-31-13
CIVIL
STATE OF CALIFORNIA

THE STATE OF CALIFORNIA OR ITS OFFICERS OR AGENTS SHALL NOT BE RESPONSIBLE FOR THE ACCURACY OR COMPLETENESS OF SCANNED COPIES OF THIS PLAN SHEET.

TO ACCOMPANY PLANS DATED 01-05-15

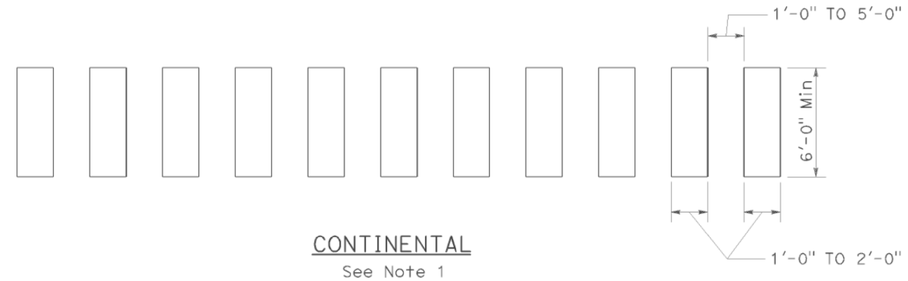

CONTINENTAL
See Note 1

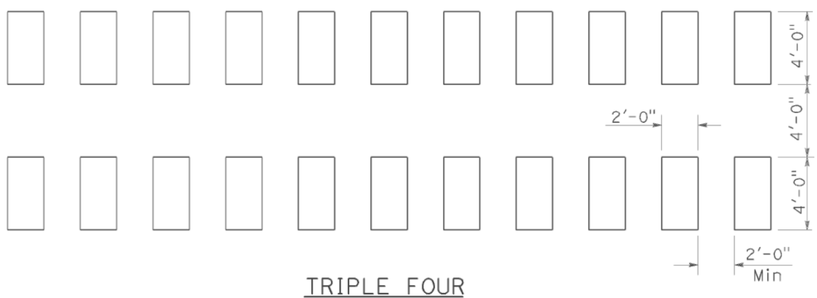

TRIPLE FOUR
See Note 1

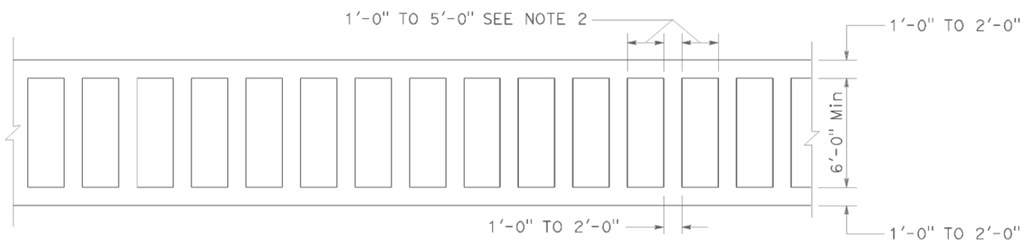

LADDER

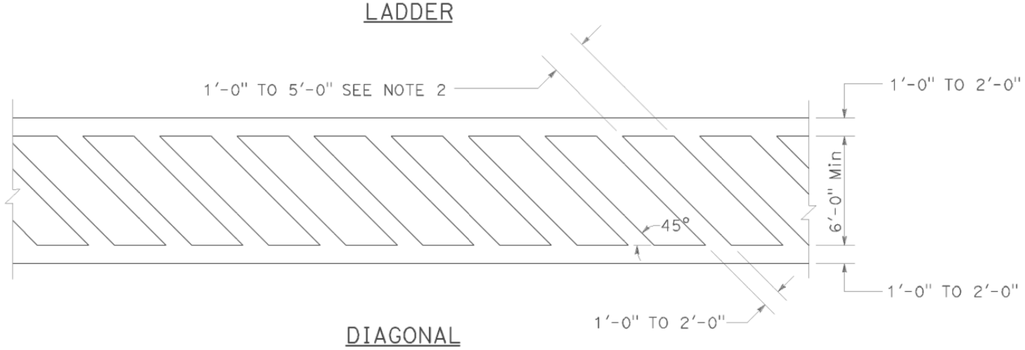

DIAGONAL

HIGHER VISIBILITY CROSSWALKS

NOTES:

1. Spaces between markings should be placed in wheel tracks of each lane.
2. Spacings not to exceed 2.5 times width of longitudinal line.
3. All crosswalk markings must be white except for those near schools must be yellow.

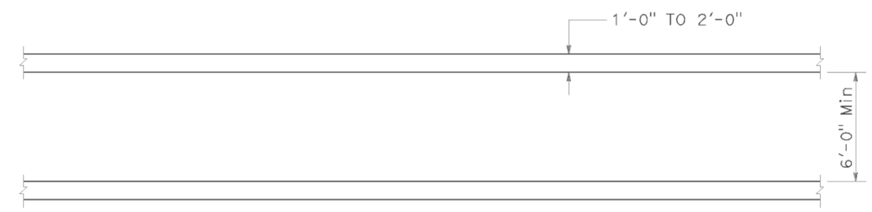

BASIC

STATE OF CALIFORNIA
DEPARTMENT OF TRANSPORTATION

PAVEMENT MARKINGS CROSSWALKS

NO SCALE

RSP A24F DATED JULY 20, 2012 SUPPLEMENTS THE STANDARD PLANS BOOK DATED 2010.

REVISED STANDARD PLAN RSP A24F

2010 REVISED STANDARD PLAN RSP A24F

DATE PLOTTED => 05-JAN-2015
TIME PLOTTED => 10:27

Dist	COUNTY	ROUTE	POST MILES TOTAL PROJECT	SHEET No.	TOTAL SHEETS
02	Las	395	R24.7/36.4	19	24

Randell D. Hiatt
REGISTERED CIVIL ENGINEER

July 19, 2013
PLANS APPROVAL DATE

REGISTERED PROFESSIONAL ENGINEER
Randell D. Hiatt
No. C50200
Exp. 6-30-15
CIVIL
STATE OF CALIFORNIA

THE STATE OF CALIFORNIA OR ITS OFFICERS OR AGENTS SHALL NOT BE RESPONSIBLE FOR THE ACCURACY OR COMPLETENESS OF SCANNED COPIES OF THIS PLAN SHEET.

TO ACCOMPANY PLANS DATED 01-05-15

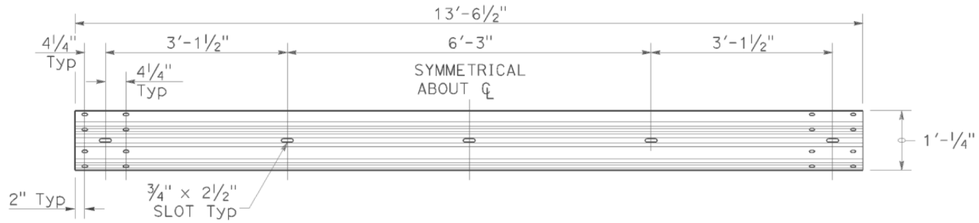

TYPICAL RAIL ELEMENT

NOTE:

1. Slotted holes for splice bolts to overlap ends of rail element.

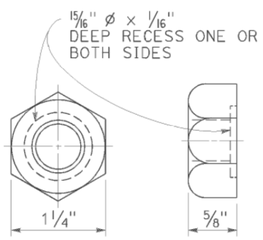

⅝" ø RECESS NUT

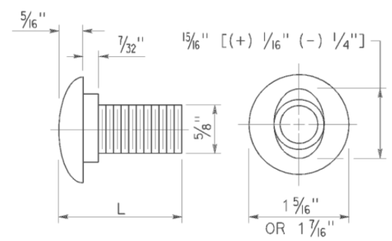

⅝" ø BUTTON HEAD BOLT

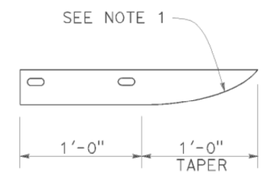

PLAN

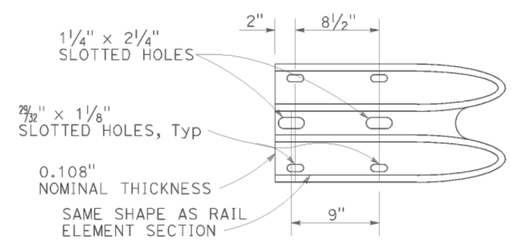

ELEVATION

END CAP
(TYPE A)

BUTTON HEAD BOLT

L	THREAD LENGTH
1⅜"	FULL THREAD LENGTH
2"	FULL THREAD LENGTH
10"	4" Min THREAD LENGTH
18"	4" Min THREAD LENGTH
20"	4" Min THREAD LENGTH
22"	4" Min THREAD LENGTH
26"	4" Min THREAD LENGTH
36"	4" Min THREAD LENGTH
** 2¾"	2" Min THREAD LENGTH
** 19"	4" Min THREAD LENGTH

** For nested rail applications.

STATE OF CALIFORNIA
DEPARTMENT OF TRANSPORTATION

MIDWEST GUARDRAIL SYSTEM STANDARD HARDWARE

NO SCALE

RSP A77M1 DATED JULY 19, 2013 SUPPLEMENTS THE STANDARD PLANS BOOK DATED 2010.

REVISED STANDARD PLAN RSP A77M1

2010 REVISED STANDARD PLAN RSP A77M1

DATE PLOTTED => 05-JAN-2015
TIME PLOTTED => 10:22

USERNAME => s115152
DGN FILE => 24g140va006.dgn

P:\proj1\02\4G140_plans\pse\24g140va006.dgn

7-3-13

Dist	COUNTY	ROUTE	POST MILES TOTAL PROJECT	SHEET No.	TOTAL SHEETS
02	Las	395	R24.7/36.4	20	24

Randell D. Hiatt
REGISTERED CIVIL ENGINEER

July 19, 2013
PLANS APPROVAL DATE

REGISTERED PROFESSIONAL ENGINEER
Randell D. Hiatt
No. C50200
Exp. 6-30-15
CIVIL
STATE OF CALIFORNIA

THE STATE OF CALIFORNIA OR ITS OFFICERS OR AGENTS SHALL NOT BE RESPONSIBLE FOR THE ACCURACY OR COMPLETENESS OF SCANNED COPIES OF THIS PLAN SHEET.

TO ACCOMPANY PLANS DATED 01-05-15

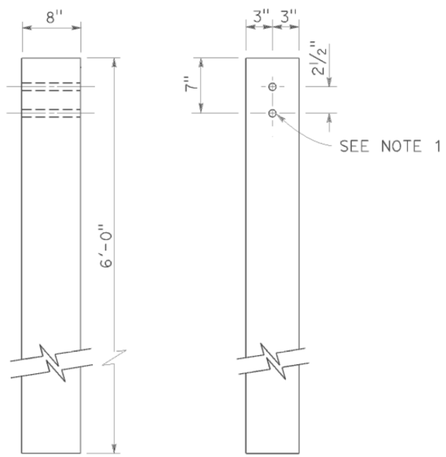

SIDE FRONT

6" x 8" WOOD POST
See Note 3

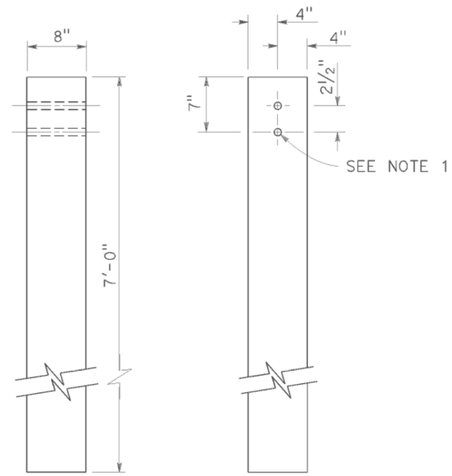

SIDE FRONT

8" x 8" WOOD POST
See Note 4

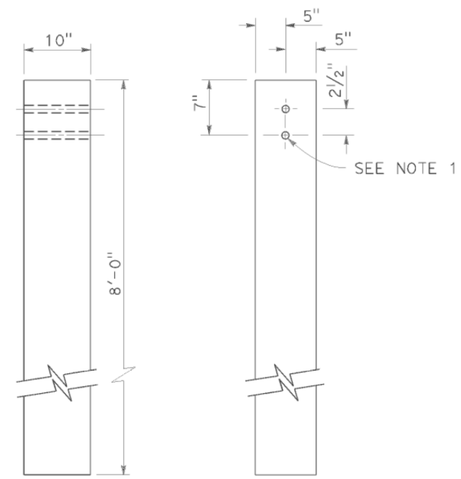

SIDE FRONT

10" x 10" WOOD POST
See Note 5

NOTES:

1. All holes in wood posts and blocks shall be ¾" Dia ± 1/16".
2. Dimensions shown for wood post are nominal.
3. This post and block combination used for standard line post sections of MGS.
4. This post and 8" x 12" block combination used for line post sections of MGS on narrow roadways.
5. This post and 8" x 12" block combination is typically used where strengthened line post sections of MGS are warranted to shield fixed objects.
6. See Revised Standard Plan RSP A77L3 for use of 6" x 8" and 8" x 8" wood blocks.

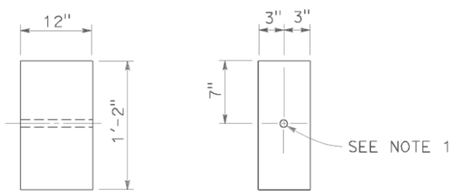

SIDE FRONT

6" x 12" WOOD BLOCK
See Note 3

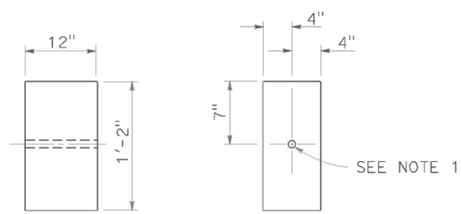

SIDE FRONT

8" x 12" WOOD BLOCK

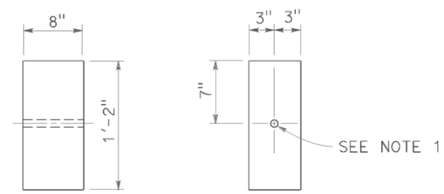

SIDE FRONT

6" x 8" WOOD BLOCK
Only for use with metal beam guard rail see Note 6

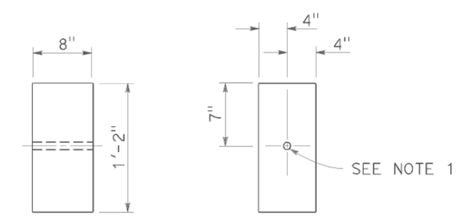

SIDE FRONT

8" x 8" WOOD BLOCK
Only for use with metal beam guard rail see Note 6

STATE OF CALIFORNIA
DEPARTMENT OF TRANSPORTATION

MIDWEST GUARDRAIL SYSTEM WOOD POST AND WOOD BLOCK DETAILS

NO SCALE

RSP A77N1 DATED JULY 19, 2013 SUPPLEMENTS THE STANDARD PLANS BOOK DATED 2010.

REVISED STANDARD PLAN RSP A77N1

2010 REVISED STANDARD PLAN RSP A77N1

DATE PLOTTED => 05-JAN-2015
TIME PLOTTED => 10:28

Dist	COUNTY	ROUTE	POST MILES TOTAL PROJECT	SHEET No.	TOTAL SHEETS
02	Las	395	R24.7/36.4	21	24

REGISTERED CIVIL ENGINEER

July 19, 2013
PLANS APPROVAL DATE

REGISTERED PROFESSIONAL ENGINEER Gurinderpal Bhullar No. C48815 Exp. 9-30-14 CIVIL STATE OF CALIFORNIA

THE STATE OF CALIFORNIA OR ITS OFFICERS OR AGENTS SHALL NOT BE RESPONSIBLE FOR THE ACCURACY OR COMPLETENESS OF SCANNED COPIES OF THIS PLAN SHEET.

TO ACCOMPANY PLANS DATED 01-05-15

2010 REVISED STANDARD PLAN RSP T9

TABLE 1

TAPER LENGTH CRITERIA AND CHANNELIZING DEVICE SPACING

SPEED (S)	MINIMUM TAPER LENGTH * FOR WIDTH OF OFFSET 12 FEET (W)				MAXIMUM CHANNELIZING DEVICE SPACING		
					X	Y	Z **
	TANGENT 2L	MERGING L	SHIFTING L/2	SHOULDER L/3	TAPER	TANGENT	CONFLICT
mph	ft	ft	ft	ft	ft	ft	ft
20	160	80	40	27	20	40	10
25	250	125	63	42	25	50	12
30	360	180	90	60	30	60	15
35	490	245	123	82	35	70	17
40	640	320	160	107	40	80	20
45	1080	540	270	180	45	90	22
50	1200	600	300	200	50	100	25
55	1320	660	330	220	55	110	27
60	1440	720	360	240	60	120	30
65	1560	780	390	260	65	130	32
70	1680	840	420	280	70	140	35

* - For other offsets, use the following merging taper length formula for L:
For speed of 40 mph or less, $L = WS^2/60$
For speed of 45 mph or more, $L = WS$

Where: L = Taper length in feet
W = Width of offset in feet
S = Posted speed limit, off-peak 85th-percentile speed prior to work starting, or the anticipated operating speed in mph

** - Use for taper and tangent sections where there are no pavement markings or where there is a conflict between existing pavement markings and channelizers (CA).

TABLE 2

LONGITUDINAL BUFFER SPACE AND FLAGGER STATION SPACING

SPEED *	Min D **	DOWNGRADE Min D ***		
		-3%	-6%	-9%
mph	ft	ft	ft	ft
20	115	116	120	126
25	155	158	165	173
30	200	205	215	227
35	250	257	271	287
40	305	315	333	354
45	360	378	400	427
50	425	446	474	507
55	495	520	553	593
60	570	598	638	686
65	645	682	728	785
70	730	771	825	891

* - Speed is posted speed limit, off-peak 85th-percentile speed prior to work starting, or the anticipated operating speed in mph

** - Longitudinal buffer space or flagger station spacing

*** - Use on sustained downgrade steeper than -3 percent and longer than 1 mile.

TABLE 3

ADVANCE WARNING SIGN SPACING

ROAD TYPE	DISTANCE BETWEEN SIGNS *		
	A	B	C
	ft	ft	ft
URBAN - 25 mph OR LESS	100	100	100
URBAN - MORE THAN 25 mph TO 40 mph	250	250	250
URBAN - MORE THAN 40 mph	350	350	350
RURAL	500	500	500
EXPRESSWAY / FREEWAY	1000	1500	2640

* - The distances are approximate, are intended for guidance purposes only, and should be applied with engineering judgment. These distances should be adjusted by the Engineer for field conditions, if necessary, by increasing or decreasing the recommmended distances.

STATE OF CALIFORNIA
DEPARTMENT OF TRANSPORTATION

TRAFFIC CONTROL SYSTEM TABLES FOR LANE AND RAMP CLOSURES

NO SCALE

RSP T9 DATED JULY 19, 2013 SUPERSEDES RSP T9 DATED APRIL 19, 2013 THAT SUPPLEMENTS THE STANDARD PLANS BOOK DATED 2010.

REVISED STANDARD PLAN RSP T9

DATE PLOTTED => 05-JAN-2015
TIME PLOTTED => 10:28

Dist	COUNTY	ROUTE	POST MILES TOTAL PROJECT	SHEET No.	TOTAL SHEETS
02	Las	395	R24.7/36.4	22	24

Devinder Singh
REGISTERED CIVIL ENGINEER

October 17, 2014
PLANS APPROVAL DATE

REGISTERED PROFESSIONAL ENGINEER
Devinder Singh
No. C50470
Exp. 6-30-15
CIVIL
STATE OF CALIFORNIA

THE STATE OF CALIFORNIA OR ITS OFFICERS OR AGENTS SHALL NOT BE RESPONSIBLE FOR THE ACCURACY OR COMPLETENESS OF SCANNED COPIES OF THIS PLAN SHEET.

TO ACCOMPANY PLANS DATED 01-05-15

NOTES:

See Revised Standard Plan RSP T9 for tables.

Use cone spacing X for taper segment, Y for tangent segment or Z for conflict situations, as approriate, per Table 1, unless X, Y, or Z cone spacing is shown on this sheet.

Unless otherwise specified in the special provisions, all temporary warning signs shall have black legend on fluorescent orange background.

California codes are designated by (CA). Otherwise, Federal (MUTCD) codes are shown.

TYPICAL LANE CLOSURE WITH REVERSIBLE CONTROL

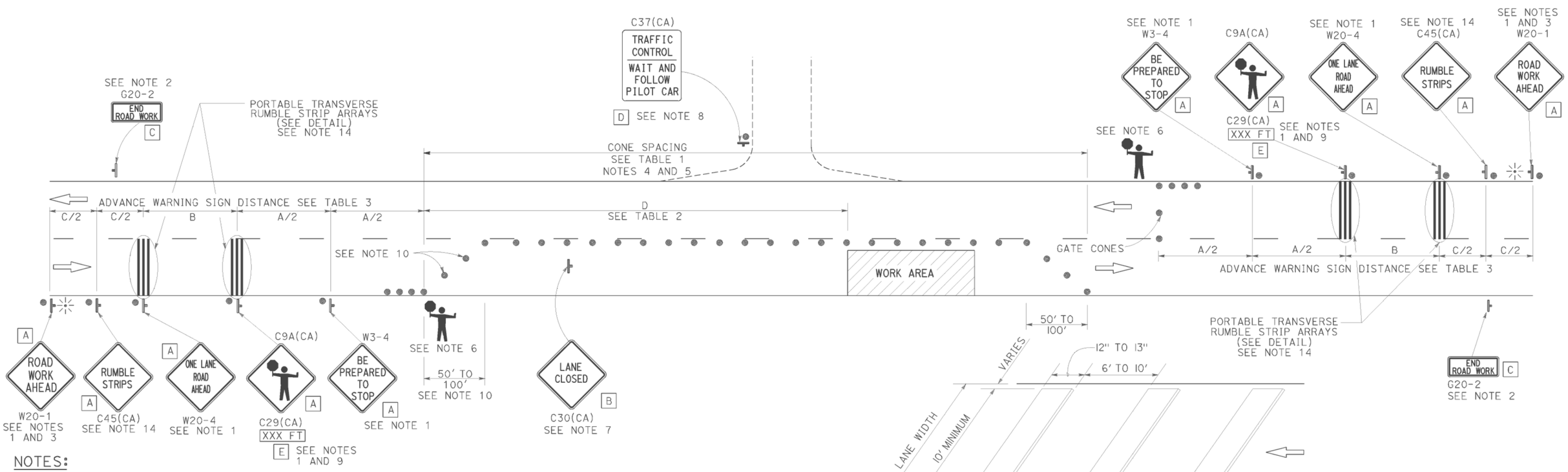

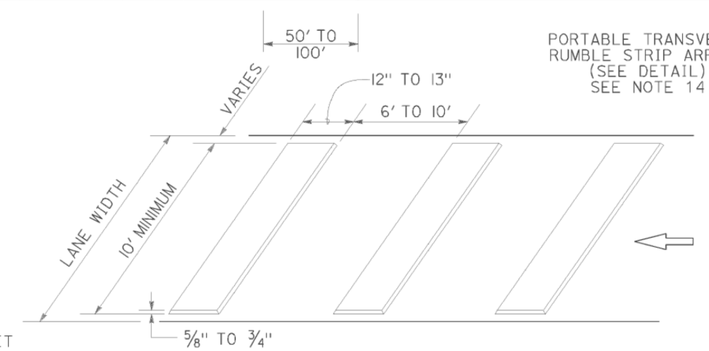

PORTABLE TRANSVERSE RUMBLE STRIP ARRAY DETAIL

NOTES:

1. Each advance warning sign in each direction of travel shall be equipped with at least two flags for daytime closure. Each flag shall be at least 16" x 16" in size and shall be orange or fluorescent red-orange in color. Flashing beacons shall be placed at the locations indicated for lane closure during hours of darkness.
2. A G20-2 "END ROAD WORK" sign, as appropriate, shall be placed at the end of the lane control unless the end of work area is obvious, or ends within a larger project's limits.
3. If the W20-1 sign would follow within 2000' of a stationary W20-1 or G20-1 "ROAD WORK NEXT _____ MILES", use a W20-4 sign for the first advance warning sign.
4. All cones used for lane closures during the hours of darkness shall be fitted with retroreflective bands (or sleeves) as specified in the specifications.
5. Portable delineators, placed at one-half the spacing indicated for traffic cones, may be used instead of cones for daytime closures only.
6. Additional advance flaggers may be required. Flagger should stand in a conspicuous place, be visible to approaching traffic as well as approaching vehicles after the first vehicle has stopped. During the hours of darkness, the flagging-station and flagger shall be illuminated and clearly visible to approaching traffic. The illumination footprint of the lighting on the ground shall be at least 20' in diameter. Place a minimum of four cones at 50' intervals in advance of flagger station as shown.
7. Place C30(CA) "LANE CLOSED" sign at 500' to 1000' intervals throughout extended work areas. They are optional if the work area is visible from the flagger station.
8. When a pilot car is used, place a C37(CA) "TRAFFIC CONTROL-WAIT AND FOLLOW PILOT CAR" sign with black legend on white background at all intersections, driveways and alleys without a flagger within traffic control area. Signs shall be clean and visible at all times. Where traffic can not be effectively self-regulated, at least one flagger shall be used at each intersection within traffic control area.
9. An optional C29(CA) sign may be placed below the C9A(CA) sign.
10. Either traffic cones or barricades shall be placed on the taper. Barricades shall be Type I, II, or III.
11. The color of the portable transverse rumble strips shall be black or orange. Use 2 arrays, each array shall consist of 3 rumble strips.
12. Portable transverse rumble strips shall not be placed on sharp horizontal or vertical curves nor shall they be placed through pedestrian crossings.
13. If the portable transverse rumble strips become out of alignment (skewed) by more than 6 inches, measured from one end to the other, they shall be readjusted to bring the placement back to the original location.
14. Portable transverse rumble strips are not required if any one of the following conditions is satisfied:
    A. Work duration occupies a location for four hours or less
    B. Posted speed limit is below 45 MPH
    C. Work is of emergency nature
    D. Work zone is in snow or icy weather conditions

LEGEND

- TRAFFIC CONE
- TEMPORARY TRAFFIC CONTROL SIGN
- PORTABLE FLASHING BEACON
- FLAGGER

SIGN PANEL SIZE (Min)

A	48" x 48"
B	30" x 30"
C	36" x 18"
D	36" x 42"
E	20" x 7"

STATE OF CALIFORNIA
DEPARTMENT OF TRANSPORTATION

TRAFFIC CONTROL SYSTEM FOR LANE CLOSURE ON TWO LANE CONVENTIONAL HIGHWAYS

NO SCALE

RSP T13 DATED OCTOBER 17, 2014 SUPERSEDES RSP T13 DATED JULY 18, 2014 AND RSP T13 DATED APRIL 19, 2013 AND STANDARD PLAN T13 DATED MAY 20, 2011 - PAGE 241 OF THE STANDARD PLANS BOOK DATED 2010.

REVISED STANDARD PLAN RSP T13

2010 REVISED STANDARD PLAN RSP T13

DATE PLOTTED => 05-JAN-2015
TIME PLOTTED => 10:28

Dist	COUNTY	ROUTE	POST MILES TOTAL PROJECT	SHEET No.	TOTAL SHEETS
02	Las	395	R24.7/36.4	23	24

REGISTERED CIVIL ENGINEER

April 19, 2013
PLANS APPROVAL DATE

REGISTERED PROFESSIONAL ENGINEER
Gurinderpal Bhullar
No. C48815
Exp. 9-30-14
CIVIL
STATE OF CALIFORNIA

THE STATE OF CALIFORNIA OR ITS OFFICERS OR AGENTS SHALL NOT BE RESPONSIBLE FOR THE ACCURACY OR COMPLETENESS OF SCANNED COPIES OF THIS PLAN SHEET.

TO ACCOMPANY PLANS DATED 01-05-15

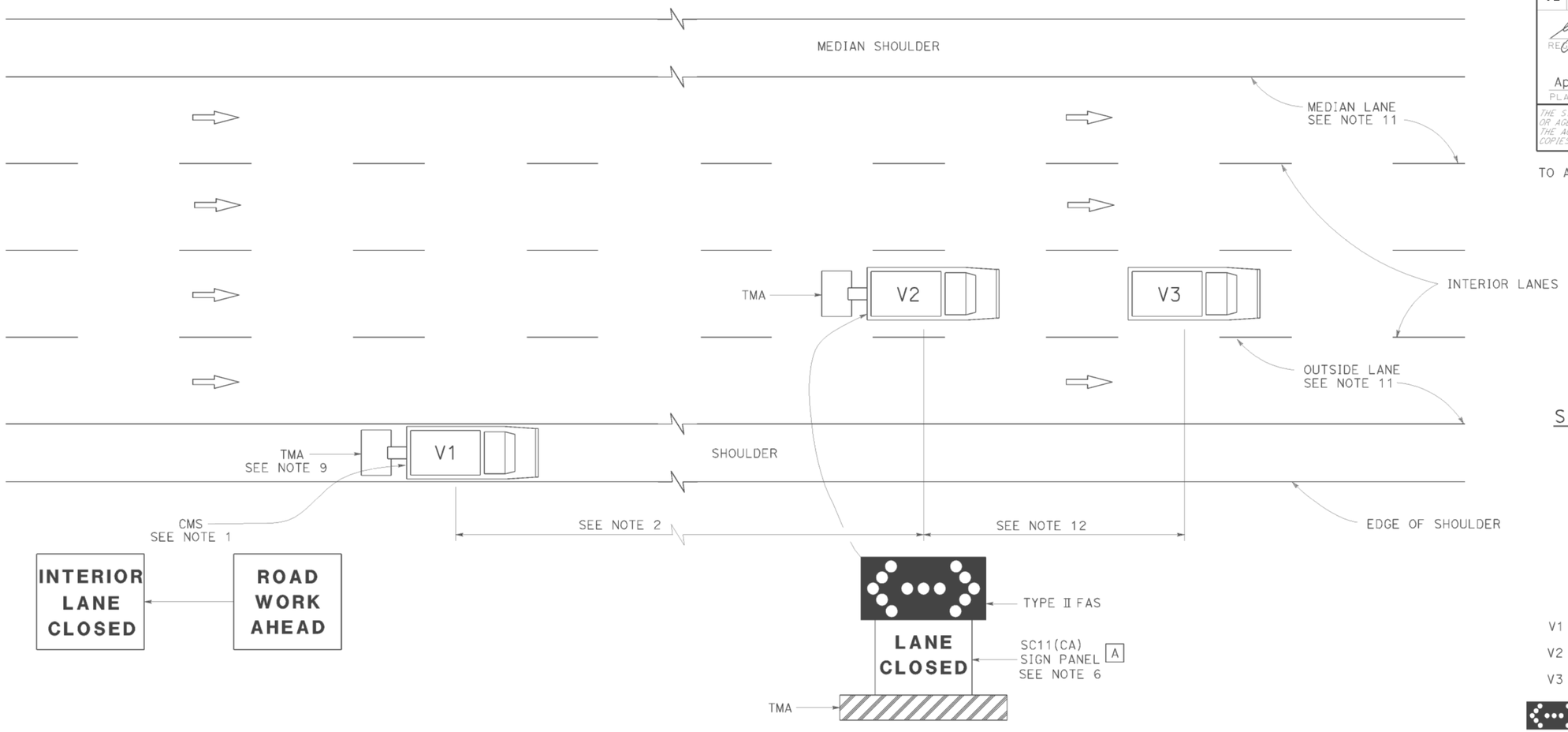

MOVING LANE CLOSURE ON INTERIOR LANE OF MULTILANE HIGHWAYS

SIGN PANEL SIZE (Min)

A 54" x 42"

LEGEND

V1	SIGN VEHICLE
V2	SHADOW VEHICLE
V3	WORK/APPLICATION VEHICLE
	FLASHING ARROW SIGN (FAS) IN FLASHING DOUBLE ARROW MODE
CMS	CHANGEABLE MESSAGE SIGN
TMA	TRUCK-MOUNTED ATTENUATOR

NOTES:

1. A changeable message sign shall be mounted on the rear of sign vehicle V1. The changeable message sign shall be sequenced to show the "ROAD WORK AHEAD" message first, followed by the "INTERIOR LANE CLOSED" message. The message "CENTER LANE CLOSED" may be used in place of the "INTERIOR LANE CLOSED" message.
2. If traffic queues develop, sign vehicle V1 should be positioned upstream from the end of queue. Sign vehicle V1 shall be positioned where highly visible when shoulders are not available.
3. A minimum sight distance of 1500′ should be provided in advance of sign vehicle V1.
4. Sign vehicle V1 should remain at the beginning of horizontal or vertical curves until the other vehicles (V2 and V3) are far enough beyond the curve to resume the minimum sight distance of 1500′.
5. Vehicle-mounted sign panels shall have Type III or above retroreflective sheeting, black on white, or black on fluorescent orange, with 6" minimum series D letters per Caltrans sign specifications.
6. Shadow vehicle V2 shall be equipped with a truck-mounted attenuator. The sign panel shown and a Type II flashing arrow sign shall be mounted on the rear of shadow vehicle V2.
7. All vehicles used for lane closures shall be equipped with two-way radios, and the vehicle operators shall maintain communication during the work or application operation.
8. All vehicles shall be equipped with flashing or rotating amber lights.
9. If sign vehicle V1 encroaches into the traffic lane due to insufficient shoulder width, sign vehicle V1 shall be equipped with a truck-mounted attenuator. Sign vehicle V1 shall stay as close to the edge of shoulder as practicable.
10. Where workers would be on foot in the work area, a stationary type lane closure (Revised Standard Plan T10, T11 etc., as applicable) shall be used instead of this plan.
11. For moving lane closure on median lane or outside lane of multilane highways, use Revised Standard Plan T15.
12. The spacing between work vehicle(s) and the shadow vehicles, and between each shadow vehicle should be minimized to deter road users from driving in between.

STATE OF CALIFORNIA
DEPARTMENT OF TRANSPORTATION

TRAFFIC CONTROL SYSTEM FOR MOVING LANE CLOSURE ON MULTILANE HIGHWAYS

NO SCALE

RSP T16 DATED APRIL 19, 2013 SUPERSEDES STANDARD PLAN T16
DATED MAY 20, 2011 - PAGE 244 OF THE STANDARD PLANS BOOK DATED 2010.

REVISED STANDARD PLAN RSP T16

2010 REVISED STANDARD PLAN RSP T16

DATE PLOTTED => 05-JAN-2015
TIME PLOTTED => 10:28

Dist	COUNTY	ROUTE	POST MILES TOTAL PROJECT	SHEET No.	TOTAL SHEETS
02	Las	395	R24.7/36.4	24	24

REGISTERED CIVIL ENGINEER

April 19, 2013
PLANS APPROVAL DATE

REGISTERED PROFESSIONAL ENGINEER Gurinderpal Bhullar No. C48815 Exp. 9-30-14 CIVIL STATE OF CALIFORNIA

THE STATE OF CALIFORNIA OR ITS OFFICERS OR AGENTS SHALL NOT BE RESPONSIBLE FOR THE ACCURACY OR COMPLETENESS OF SCANNED COPIES OF THIS PLAN SHEET.

TO ACCOMPANY PLANS DATED 01-05-15

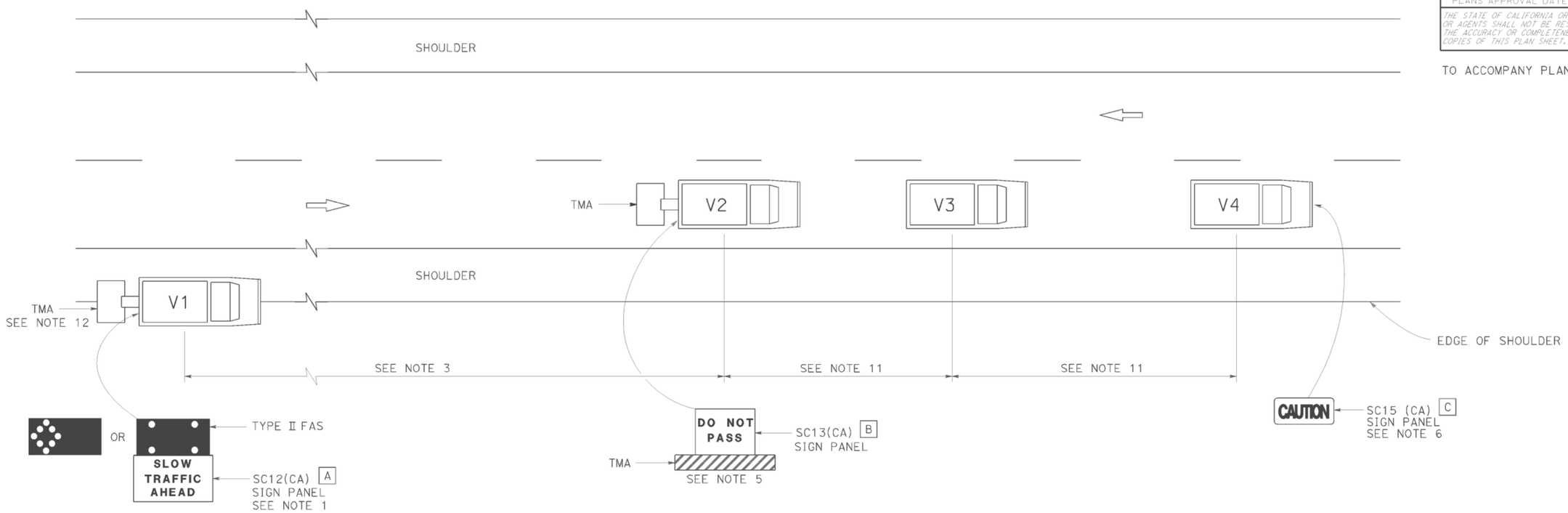

LEGEND

V1	SIGN VEHICLE
V2	SHADOW VEHICLE
V3	WORK/APPLICATION VEHICLE
V4	SIGN VEHICLE
TMA	TRUCK-MOUNTED ATTENUATOR
	FLASHING ARROW SIGN (FAS) IN FLASHING CAUTION MODE
	FLASHING ARROW SIGN (FAS) IN ALTERNATING DIAMOND CAUTION

SIGN PANEL SIZE (Min)

A	72" x 42"
B	54" x 42"
C	54" x 24"

NOTES:

1. Either a changeable message sign or a SC12(CA) "SLOW TRAFFIC AHEAD" sign shall be mounted on the rear of sign vehicle V1. The changeable message sign shall be sequenced to show the "CAUTION" message first, follow by the "SLOW TRAFFIC AHEAD" message. A Type II flashing arrow sign may be used with the SC12(CA) sign panel.
2. Sign vehicle V1 should be positioned where highly visible when shoulders are not available.
3. If traffic queues develop, sign vehicle V1 should be positioned upstream from the end of queue.
4. Vehicle-mounted sign panels shall have Type III or above retroreflective sheeting, black on white, or black on fluorescent orange, with 6" minimum series D letters per Caltrans sign specifications.
5. Shadow vehicle shall be equipped with a truck-mounted attenuator. The sign panel shown shall be mounted on the rear of shadow vehicle V2. The message "LANE CLOSED" may be used in place of the "DO NOT PASS" message.
6. The sign panel shown shall be mounted on the front of sign vehicle V4, facing opposing traffic.
7. All vehicles shall be equipped with flashing or rotating amber lights.
8. Sign vehicle V4 will not be required when the work and vehicles V2 and V3 are 2' or more from the centerline of the highway during the work or application operations.
9. All vehicles used for lane closures shall be equipped with two-way radios and the vehicle operators shall maintain communication during the work or application operation.
10. This plan shall not be used where workers would be on foot in the work area. Use a stationary type lane closure (Revised Standard Plan T13) for this condition.
11. Minimize spacing between vehicles V2 and V3 and vehicles V3 and V4 to deter road users from driving in between them.
12. If sign vehicle V1 encroaches into the traffic lane due to insufficient shoulder width, sign vehicle V1 shall be equipped with a truck-mounted attenuator. Sign vehicle V1 shall stay as close to the edge of shoulder as practicable.

STATE OF CALIFORNIA
DEPARTMENT OF TRANSPORTATION

TRAFFIC CONTROL SYSTEM FOR MOVING LANE CLOSURE ON TWO LANE HIGHWAYS

NO SCALE

RSP T17 DATED APRIL 19, 2013 SUPERSEDES STANDARD PLAN T17
DATED MAY 20, 2011 - PAGE 245 OF THE STANDARD PLANS BOOK DATED 2010.

REVISED STANDARD PLAN RSP T17

2010 REVISED STANDARD PLAN RSP T17

DATE PLOTTED => 05-JAN-2015
TIME PLOTTED => 10:28