STATE OF CALIFORNIA—BUSINESS, TRANSPORTATION AND HOUSING AGENCY

DEPARTMENT OF TRANSPORTATION
ENGINEERING SERVICE CENTER
Transportation Laboratory
5900 Folsom Boulevard
Sacramento, California 95819-4612

METHOD OF TEST FOR CRUSHING OF LONGITUDINALLY WELDED STEEL TUBULAR PRODUCTS (UNIVERSAL CRUSHING TEST)

CAUTION: Prior to handling test materials, performing equipment setups, and/or conducting this method, testers are required to read "**SAFETY AND HEALTH**" in Section G of this method. It is the responsibility of the user of this method to consult and use departmental safety and health practices and determine the applicability of regulatory limitations before any testing is performed.

A. SCOPE

This method describes a procedure for testing the welded seam in welded steel tubular products, such as highway lighting standards, by means of a crushing test.

The designation, "Universal Crushing Test", refers to the fact that it is applicable to various welded tubular products, provided they have an outside diameter of 50 mm or larger.

B. APPARATUS

Any type of machine or device capable of crushing the specimen down to a height of one-half its original outside diameter is required.

C. TEST PROCEDURE

1. Cut three tubular test sections, each 100-mm in length, from the sample pipe. The cuts may be made by sawing, although torch cuts are permissible if the burned edges are subsequently removed and squared by grinding.

2. Position the welded longitudinal seam ninety degrees from the point of transversely applied crushing force (see Figures 1 and 2). Crush each of these three sections cold (ambient temperature) down to a height of one-half the original outside diameter. The crushing force may be produced by any convenient means such as jacking or levering. Apply the force evenly along the length of the test specimen using parallel flat plates or wooden blocks.

3. If in *any* one of the three test sections the *sum* of all crack lengths and open defects along the weld seam exceeds 9.5 mm, the sample pipe is unacceptable under this test method.

D. NOTES

This test procedure will demonstrate the quality of the welded pipe seam only. It does not provide an adequate test for the mechanical properties of the parent material.

Figures 3 through 8 show typical test specimens after crushing. All of these samples were crushed to the same extreme crushing height. It is apparent that a wide range of defect types and levels can be encountered in test sections. The gas hole defects shown in

Figures 5 and 7 are especially common in this type of weldment. Care must be taken in measuring these small exposed pinholes so that they may be accurately included in the summation of defect lengths taken across the welded seam.

E. HAZARDS

Keep clear of the specimen and testing device during the test to avoid crushing fingers or similar injuries.

F. REPORTING RESULTS

Report results of test with appropriate comments and notations of defects on work sheet, Form TL-0610 or TL-0619.

Report results in final form (as complying or not complying with specifications) on Form TL-0616.

G. SAFETY AND HEALTH

Prior to handling, testing or disposing of any waste materials, testers are required to read: Part A (Section 5.0), Part B (Sections: 5.0, 6.0 and 10.0) and Part C (Section 1.0) of Caltrans Laboratory Safety Manual. Users of this method do so at their own risk.

End of Text (California Test 664 contains 6 pages)

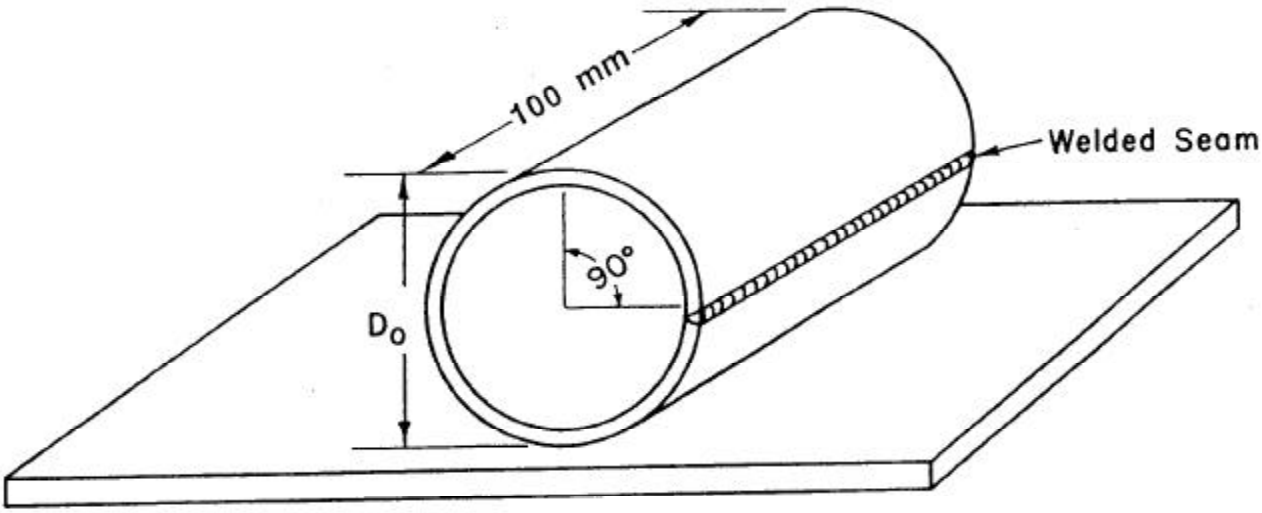

BEFORE CRUSHING

FIGURE 1

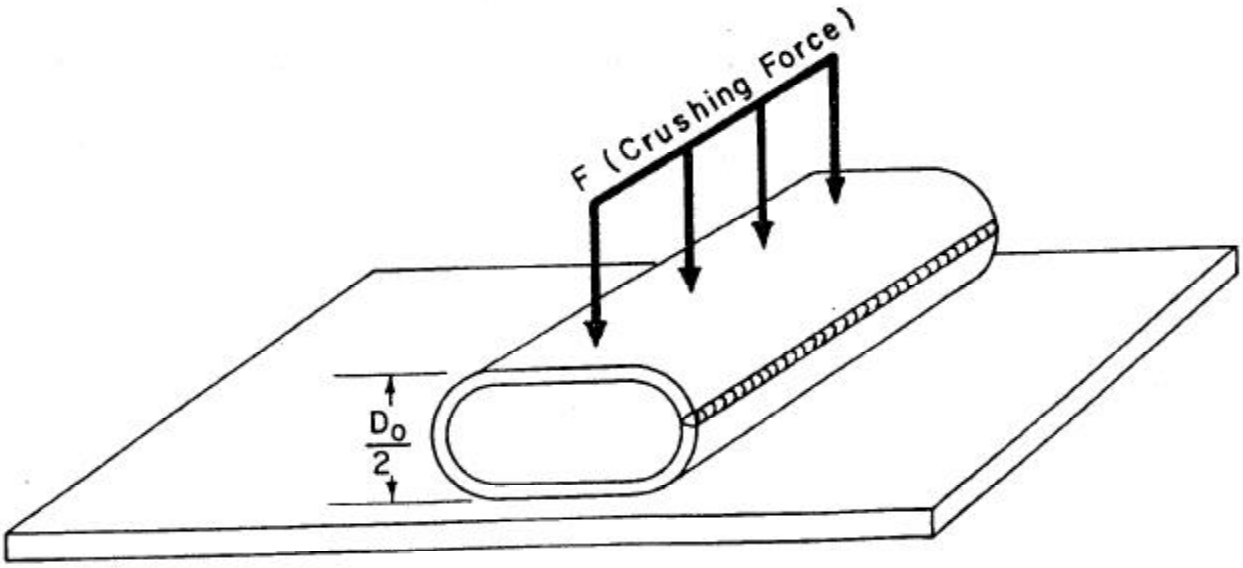

AFTER CRUSHING

FIGURE 2

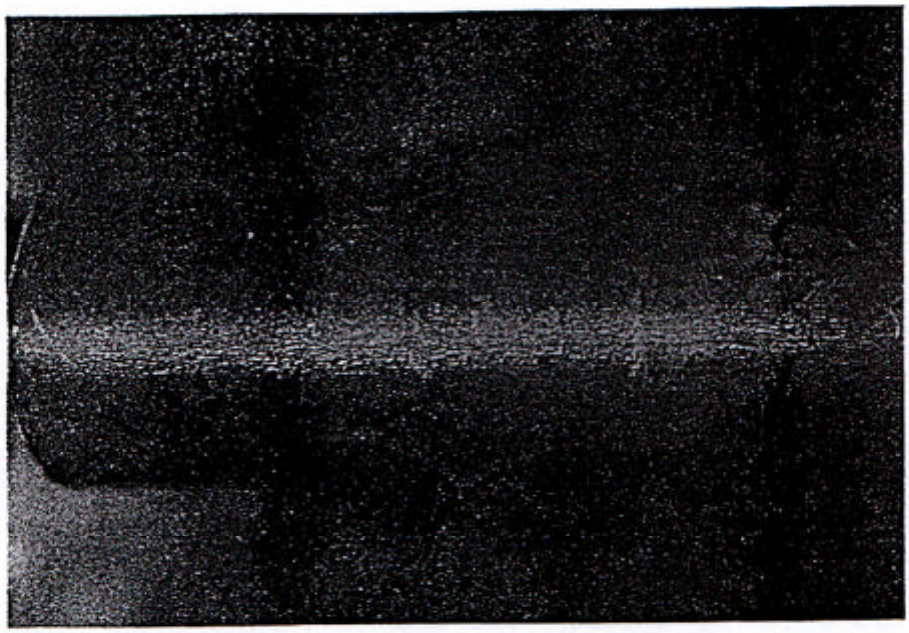

FIGURE 3 - RESISTANCE WEDLED - 4.55 MM
SUM DEFECT LENGTHS = 0 MM - ACCEPTABLE

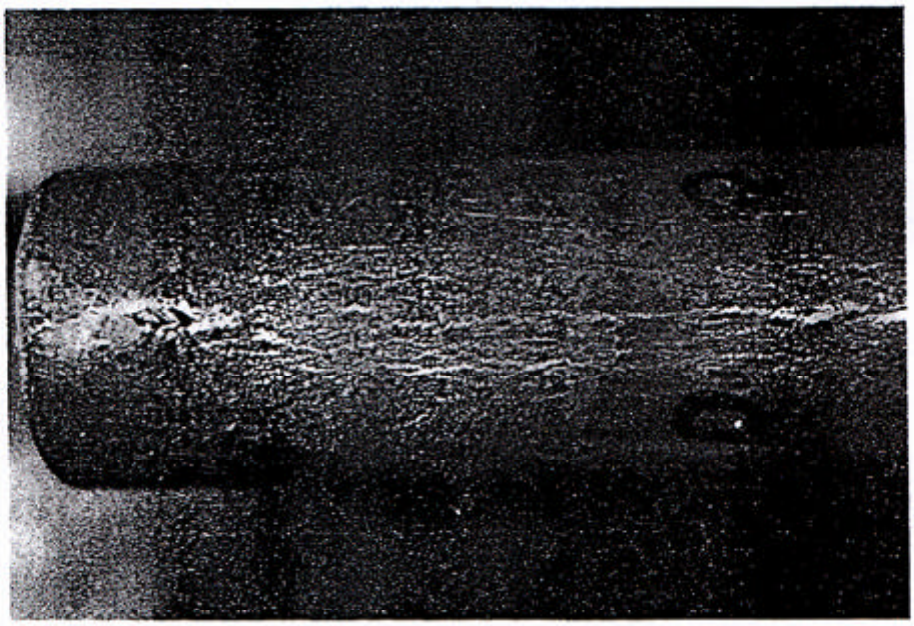

FIGURE 4 - RESISTANCE WELDED - 4.55 MM
SUM OF DEFECT LENGTHS = 25 MM - UNACCEPTABLE

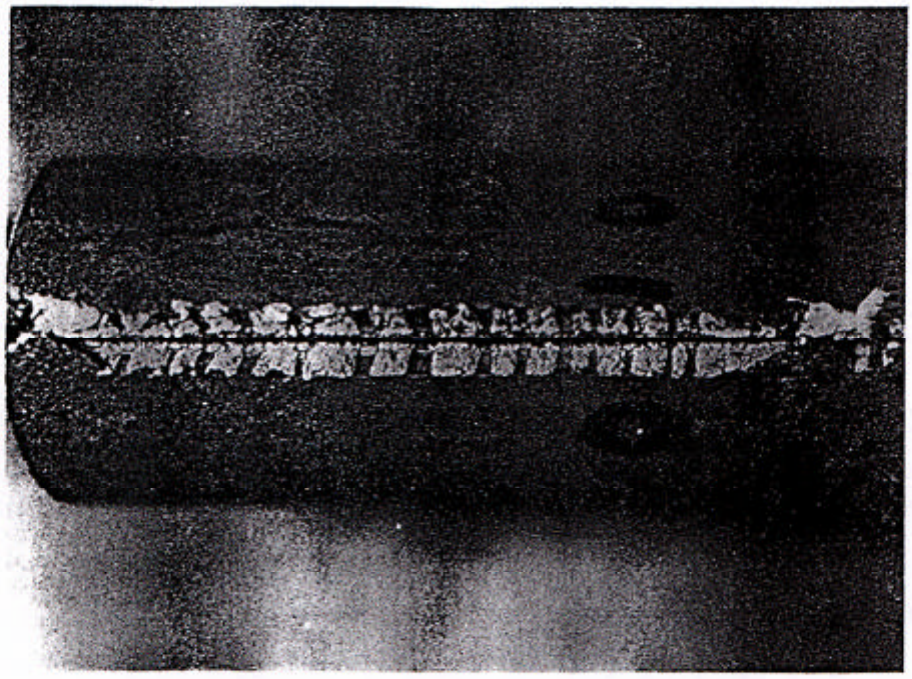

FIGURE 5 - RESISTANCE WELDED - 4.55 MM
SUM OF DEFECT LENGTHS = 100 MM - UNACCEPTABLE

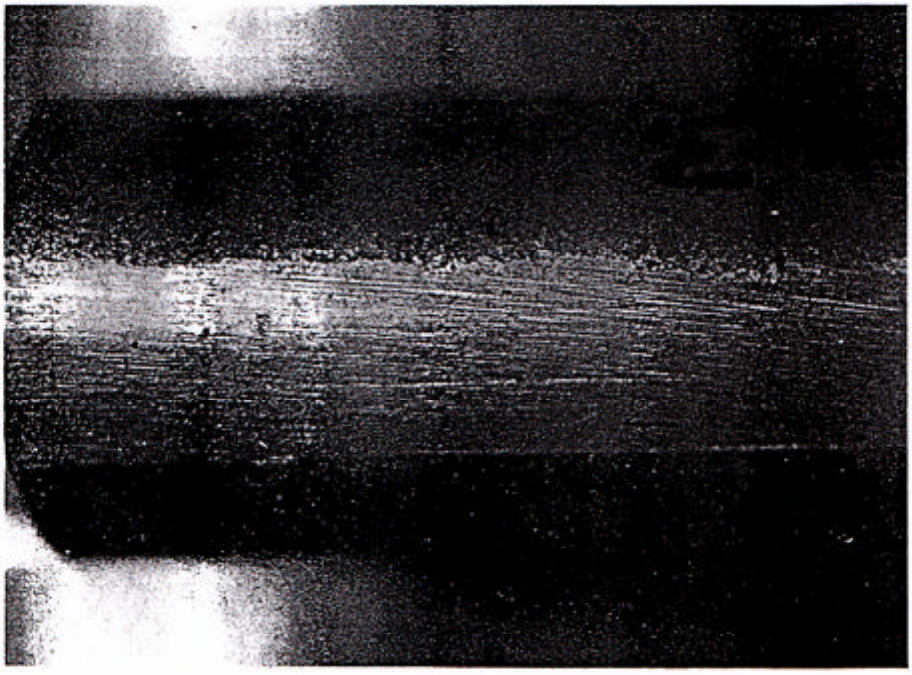

FIGURE 6 - SUB-ARC WELDED - 4.55 MM
SUM OF DEFECT LENGTHS = 0 MM - ACCEPTABLE

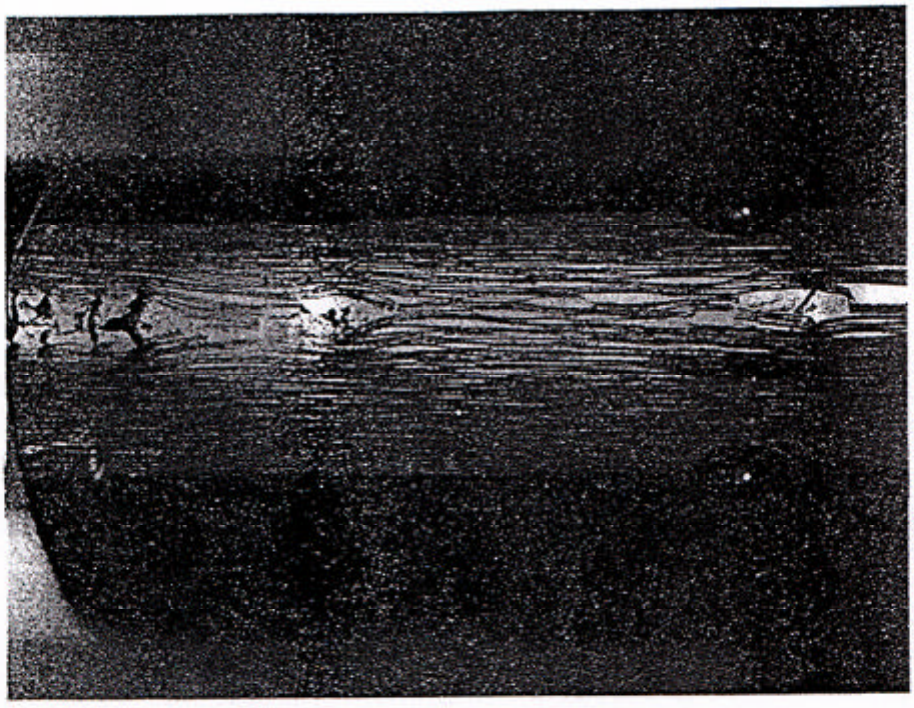

FIGURE 7 - SUB-ARC WELDED - 4.55 MM
SUM OF DEFECT LENGTHS = 50 MM - UNACCEPTABLE

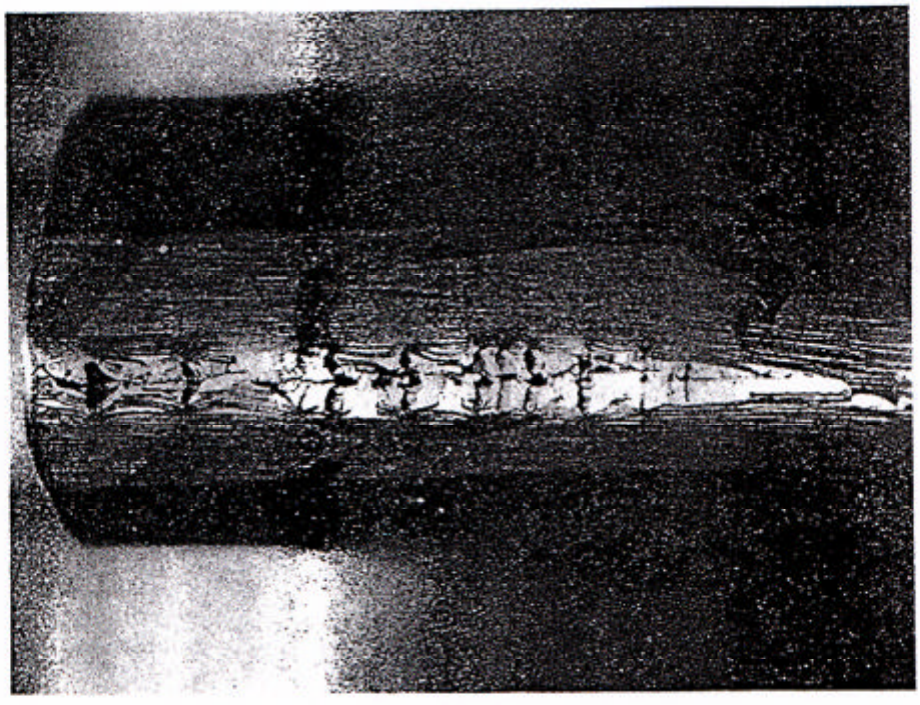

FIGURE 8 - SUB-ARC WELDED - 4.55 MM
SUM OF DEFECT LENGTHS = 100 MM - UNACCEPTABLE