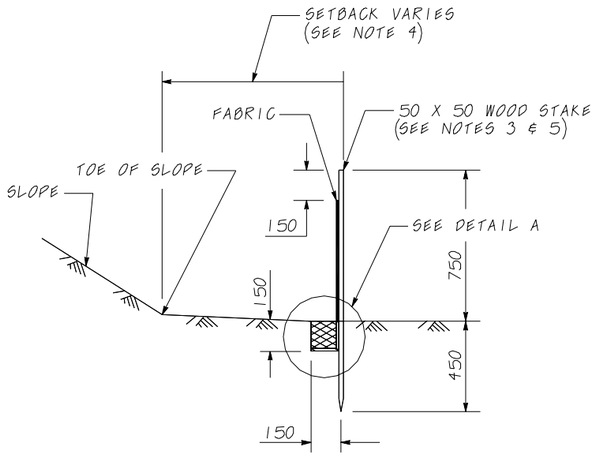

SECTION A-A

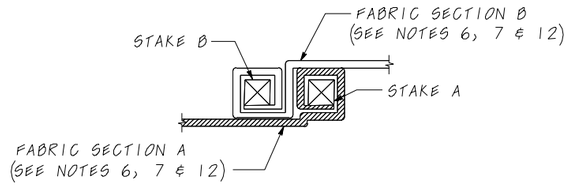

JOINING SECTION DETAIL (TOP VIEW)

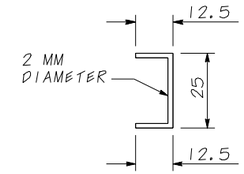

STAPLE DETAIL

(SEE NOTE 9)

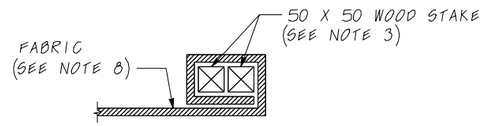

END STAKE DETAIL (TOP VIEW)

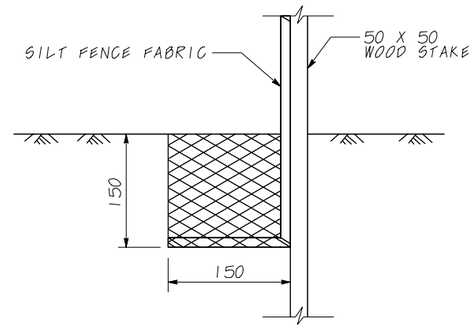

DETAIL A

NOTES

1. CONSTRUCT THE LENGTH OF EACH REACH SO THAT THE CHANGE IN BASE ELEVATION ALONG THE REACH DOES NOT EXCEED 1/3 THE HEIGHT OF THE LINEAR BARRIER, IN NO CASE SHALL THE REACH LENGTH EXCEED 150M.
2. THE LAST 2.5 M OF FENCE SHALL BE TURNED UP SLOPE.
3. STAKE DIMENSIONS ARE NOMINAL.
4. DIMENSION MAY VARY TO FIT FIELD CONDITION.
5. STAKES SHALL BE SPACED AT 2.5 M MAXIMUM AND SHALL BE POSITIONED ON DOWNSTREAM SIDE OF FENCE.
6. STAKES TO OVERLAP AND FENCE FABRIC TO FOLD AROUND EACH STAKE ONE FULL TURN. SECURE FABRIC TO STAKE WITH 4 STAPLES.
7. STAKES SHALL BE DRIVEN TIGHTLY TOGETHER TO PREVENT POTENTIAL FLOW-THROUGH OF SEDIMENT AT JOINT. THE TOPS OF THE STAKES SHALL BE SECURED WITH WIRE.
8. FOR END STAKE, FENCE FABRIC SHALL BE FOLDED AROUND TWO STAKES ONE FULL TURN AND SECURED WITH 4 STAPLES.
9. MINIMUM 4 STAPLES PER STAKE. DIMENSIONS SHOWN ARE TYPICAL.
10. CROSS BARRIERS SHALL BE A MINIMUM OF 1/3 AND A MAXIMUM OF 1/2 THE HEIGHT OF THE LINEAR BARRIER.
11. MAINTENANCE OPENINGS SHALL BE CONSTRUCTED IN A MANNER TO ENSURE SEDIMENT REMAINS BEHIND SILT FENCE.
12. JOINING SECTIONS SHALL NOT BE PLACED AT SUMP LOCATIONS.
13. SANDBAG ROWS AND LAYERS SHALL BE OFFSET TO ELIMINATE GAPS.

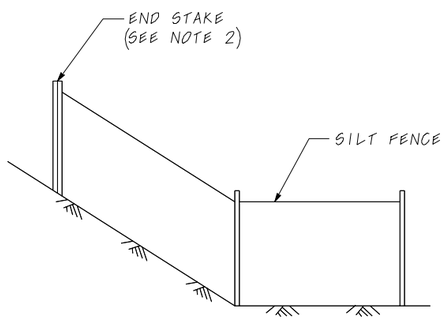

END DETAIL

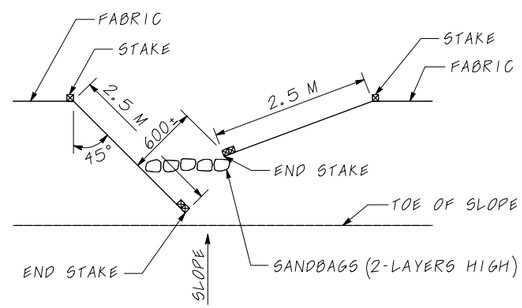

OPTIONAL MAINTENANCE OPENING DETAIL

(SEE NOTE 11)

LEGEND

- TAMPED BACKFILL
- SLOPE DIRECTION
- DIRECTION OF FLOW

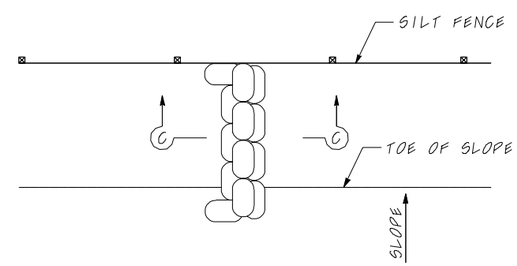

CROSS BARRIER DETAIL

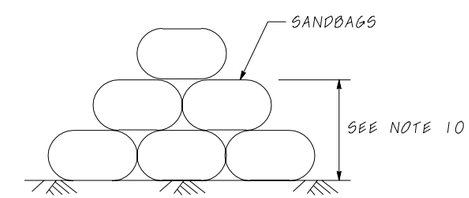

SECTION C-C

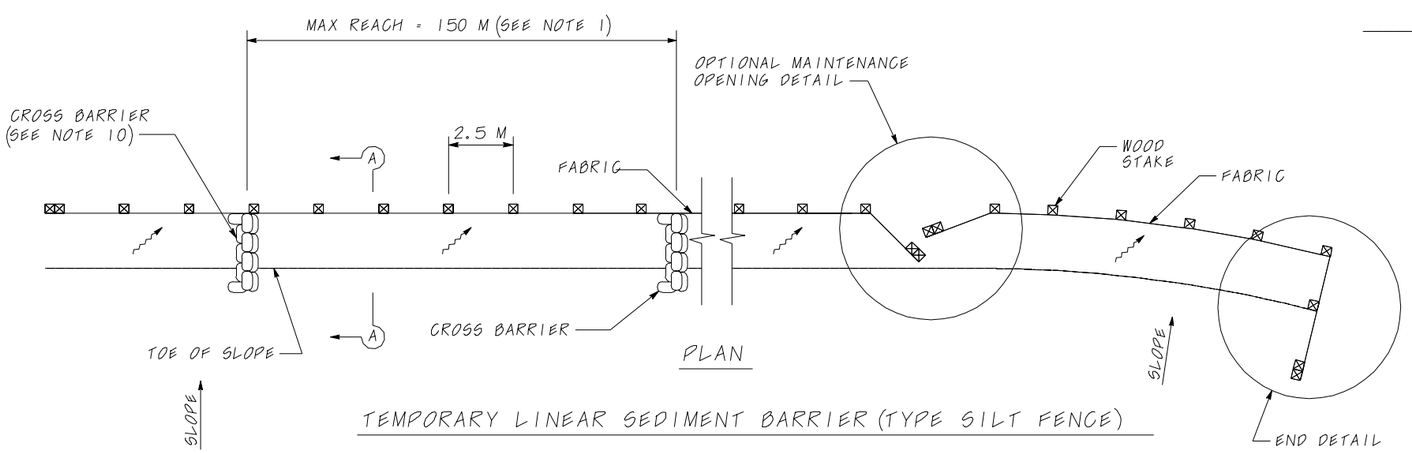

PLAN

TEMPORARY LINEAR SEDIMENT BARRIER (TYPE SILT FENCE)

WPCD-13

ZZZ CONSTRUCTION COMPANY	WATER POLLUTION CONTROL DRAWINGS SILT FENCE DETAILS				
DRAWN D. J. D.					
APPROVED	SIZE A	SCALE NONE	DATE 11/00	REV 0	SHEET 1 OF 1

0:*52907*WPCD* WPCD-2.DWG 08/10/00 18:51

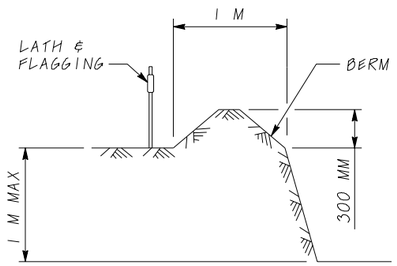

SECTION A-A

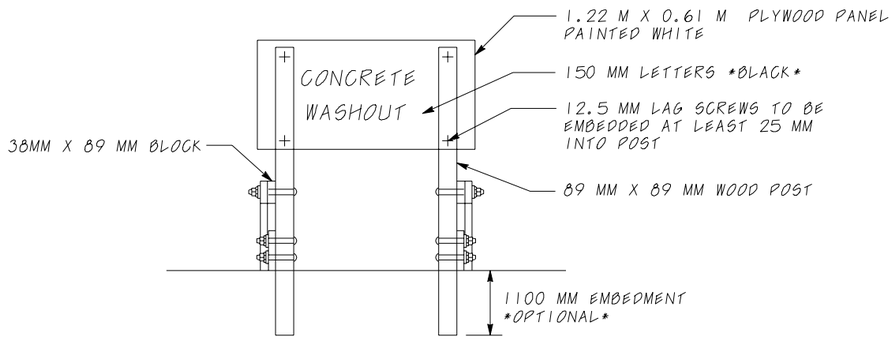

SIGN ELEVATION

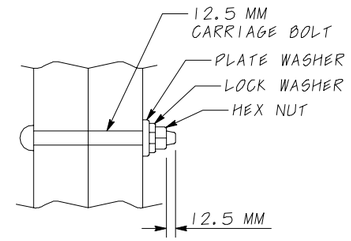

BOLT CONNECTION DETAIL

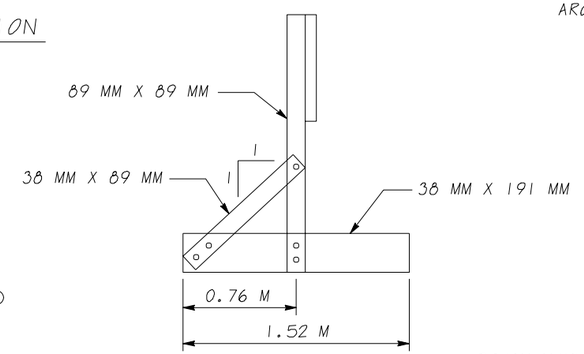

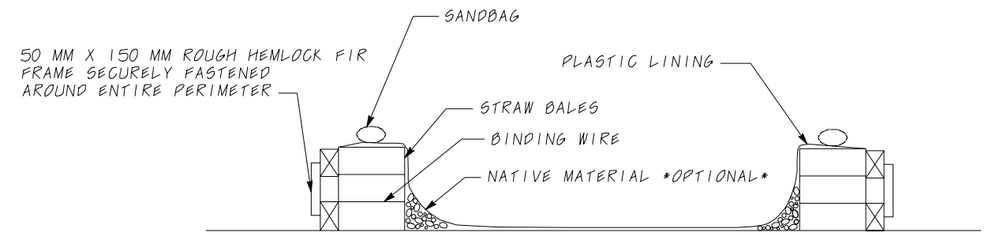

SECTION B-B

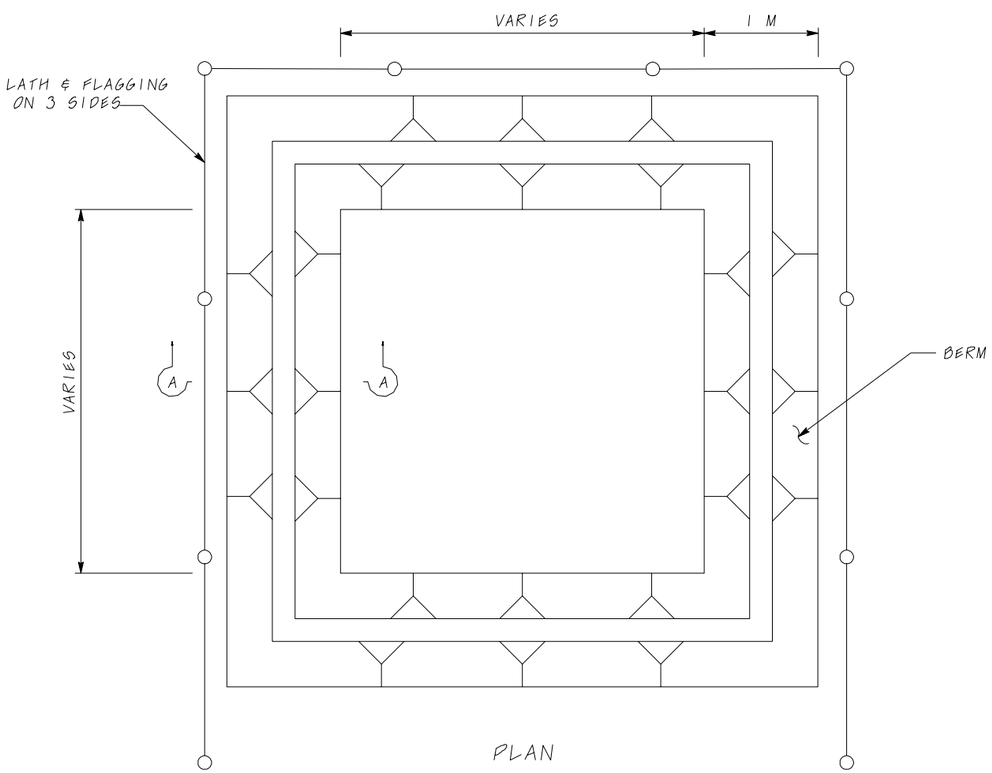

PLAN
TYPE "BELOW GRADE"

NOTE:
ACTUAL SIZE WILL BE ESTIMATED
BASED ON SIZE OF CONCRETE POUR(S)

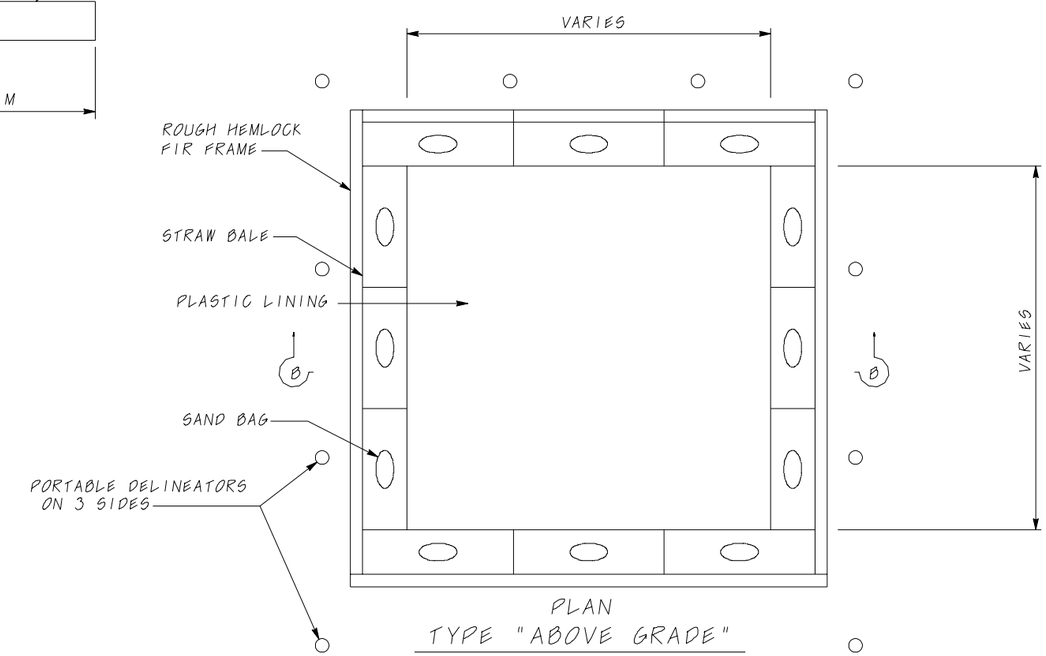

PLAN
TYPE "ABOVE GRADE"

NOTE:
ACTUAL SIZE WILL BE ESTIMATED
BASED ON SIZE OF CONCRETE POUR(S)

WPCD-14

ZZZ CONSTRUCTION COMPANY	WATER POLLUTION CONTROL DRAWINGS CONCRETE WASHOUT DETAILS				
DRAWN D. J. D.					
APPROVED	SIZE A	SCALE NONE	DATE 11/00	REV 0	SHEET 1 OF 1

0:*52907*WPCD* WPCD-3.DWG 08/10/00 18:54

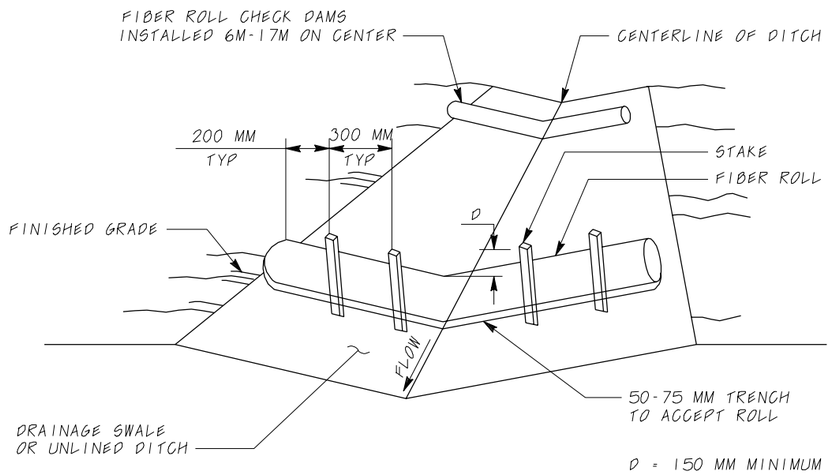

PERSPECTIVE

FIBER ROLL CHECK DAM IN UNLINED DITCH

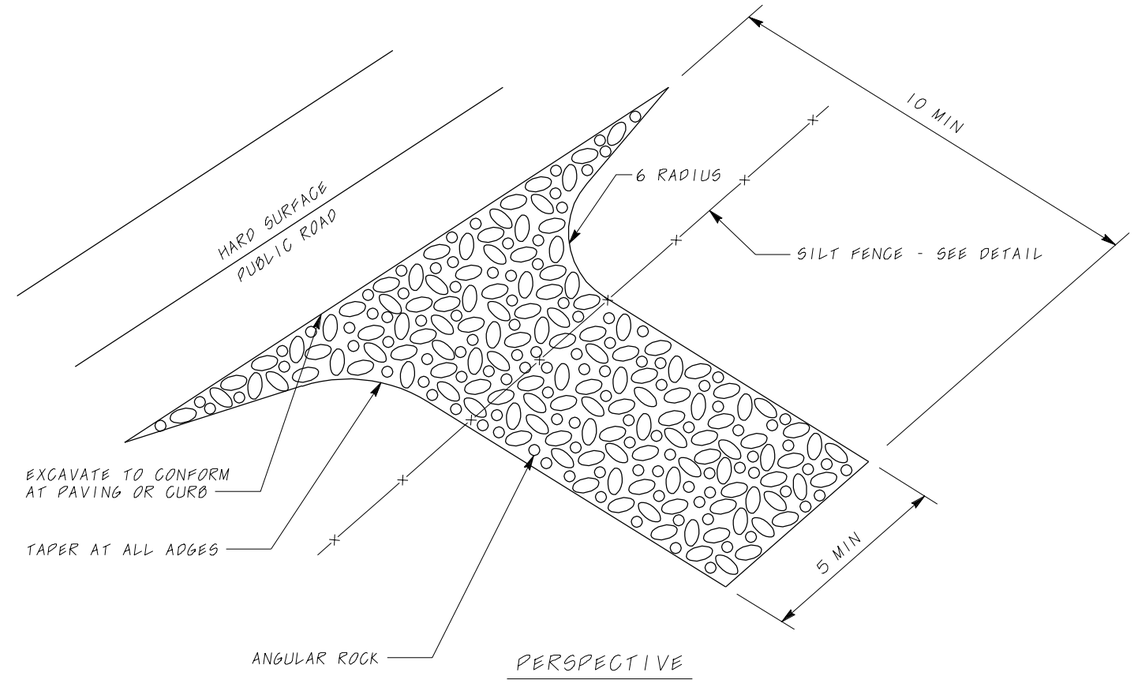

PERSPECTIVE

TEMPORARY CONSTRUCTION ENTRANCE/EXIT

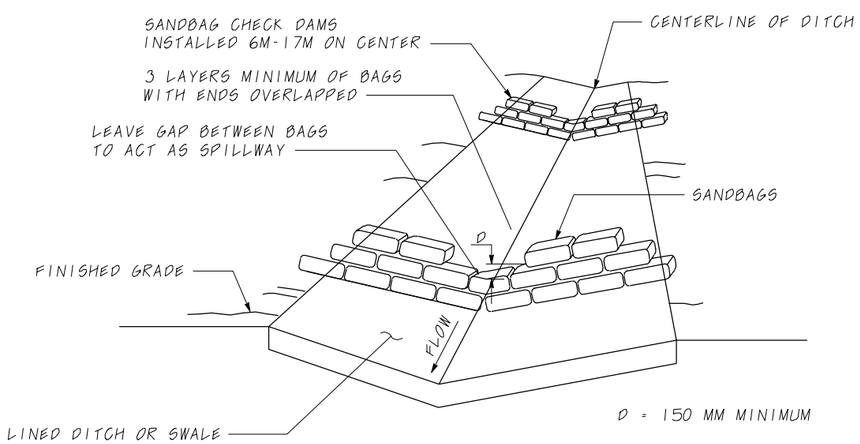

PERSPECTIVE

SANDBAG CHECK DAM IN LINED DITCH

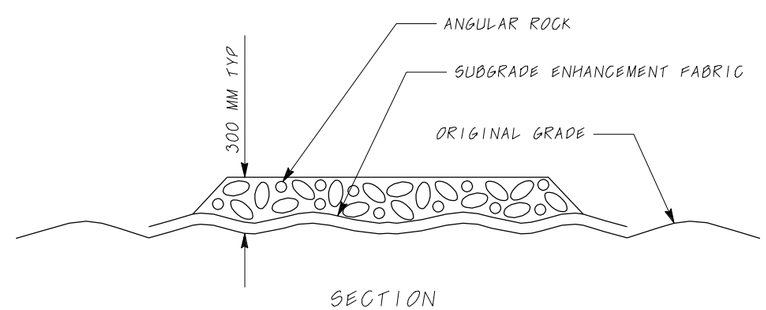

SECTION

TEMPORARY CONSTRUCTION ROAD

WPCD-15

ZZZ CONSTRUCTION COMPANY	WATER POLLUTION CONTROL DRAWINGS CONSTRUCTION DETAILS				
DRAWN D. J. D.					
APPROVED	SIZE A	SCALE NONE	DATE 11/00	REV 0	SHEET 1 OF 1

0:*52607*WPCD* WPCD-2.DWG 08/10/00 16:51

LEGEND

- CONTRACTOR'S TRAILER
- PORTABLE SANITARY FACILITY CONSTRUCTED TO RESIST TIPPING
- DUMPSTER
- STRAW BALE BARRIER PER SC-9 OR SANDBAG BARRIER PER SC-8
- ABSORBENT MATERIAL
- SUMP
- SILT FENCE AROUND ENTIRE PERIMETER PER SC-1
- STABILIZED CONSTRUCTION ENTRANCE/EXIT PER PC-1
- STABILIZED CONSTRUCTION ROADWAY PER TC-2
- BERM PER SS-9
- CONCRETE PAD OR OTHER IMPERVIOUS MATERIAL
- FUELING TANK WITH SECONDARY CONTAINMENT

IT IS BEST TO KEEP THE YARD AS FAR AWAY FROM ESA'S AS POSSIBLE

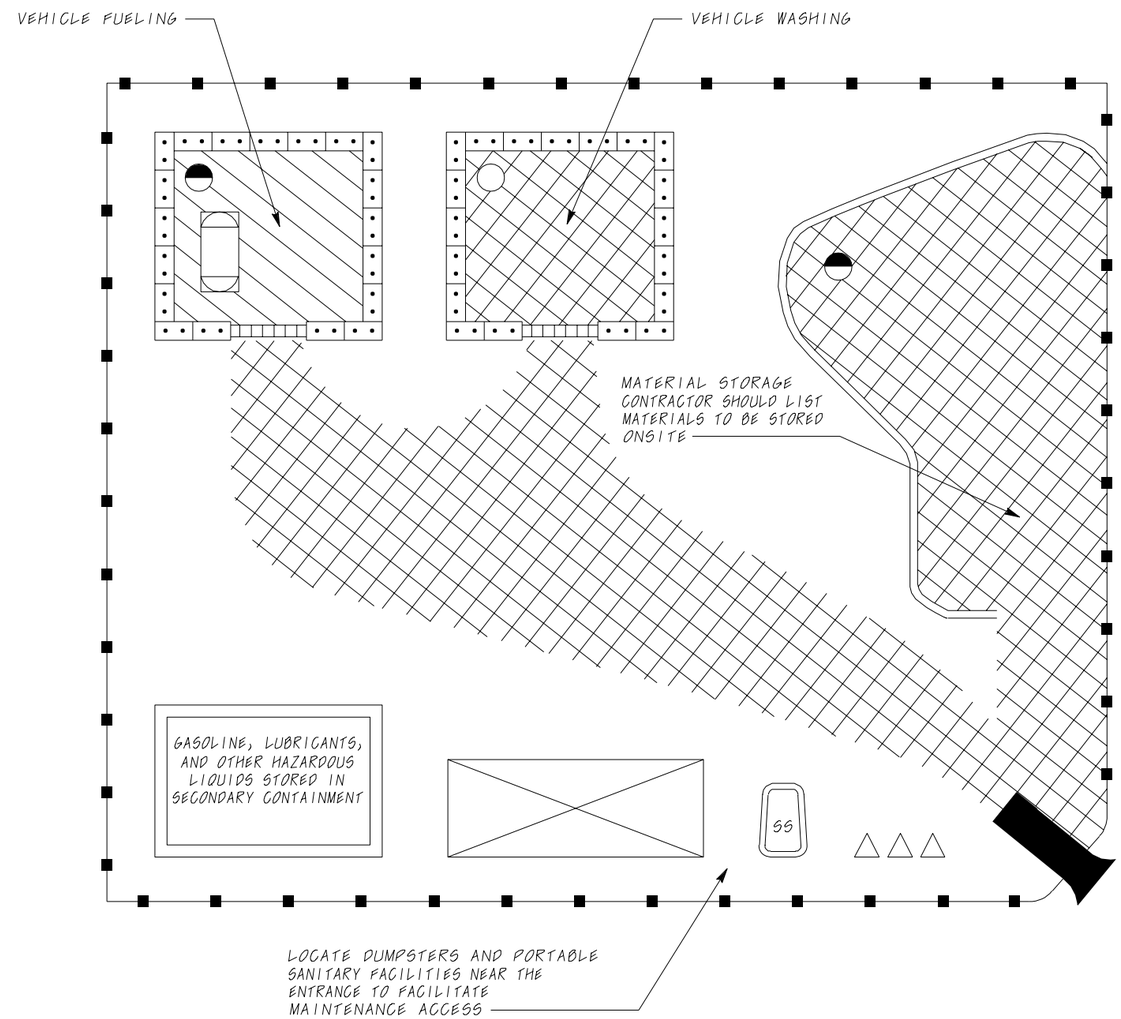

SAMPLE CONTRACTOR'S CONSTRUCTION YARD

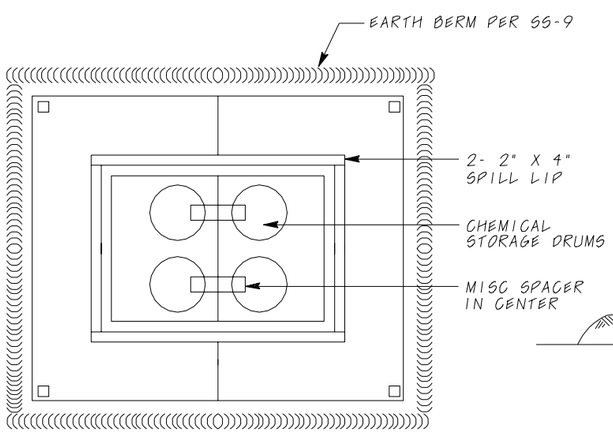

PLAN

CHEMICAL STORAGE

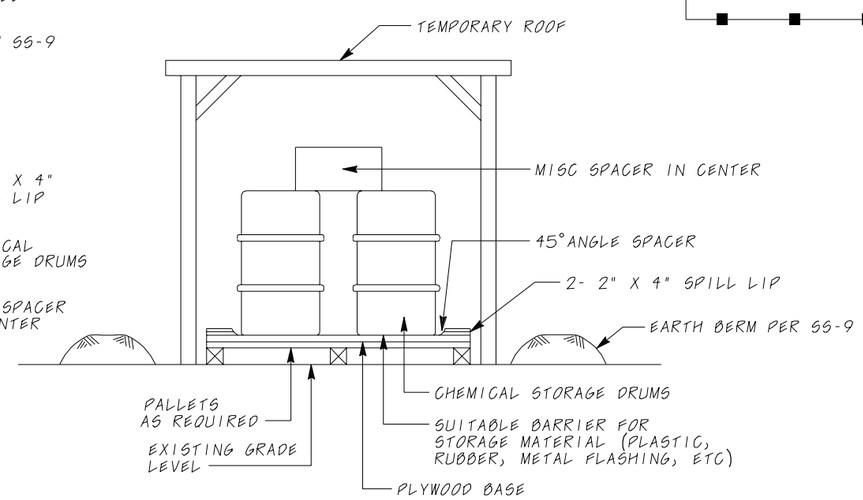

SECTION

WPCD-16

ZZZ CONSTRUCTION COMPANY	WATER POLLUTION CONTROL DRAWINGS CONSTRUCTION DETAILS				
DRAWN D. J. D.					
APPROVED	SIZE A	SCALE NONE	DATE 11/00	REV 0	SHEET 1 OF 1

14 NOV 100 09:51:12 q:\52907\wpcd\wpcd-16.dgn