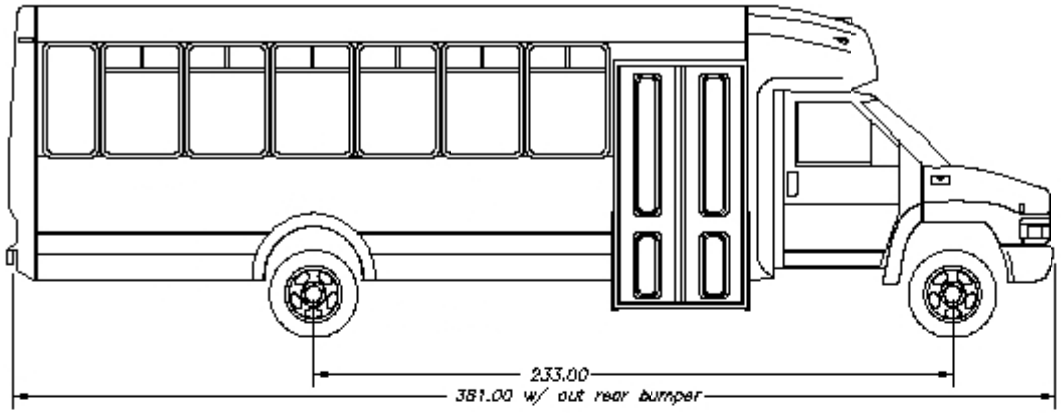

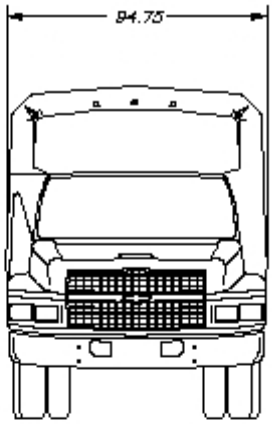

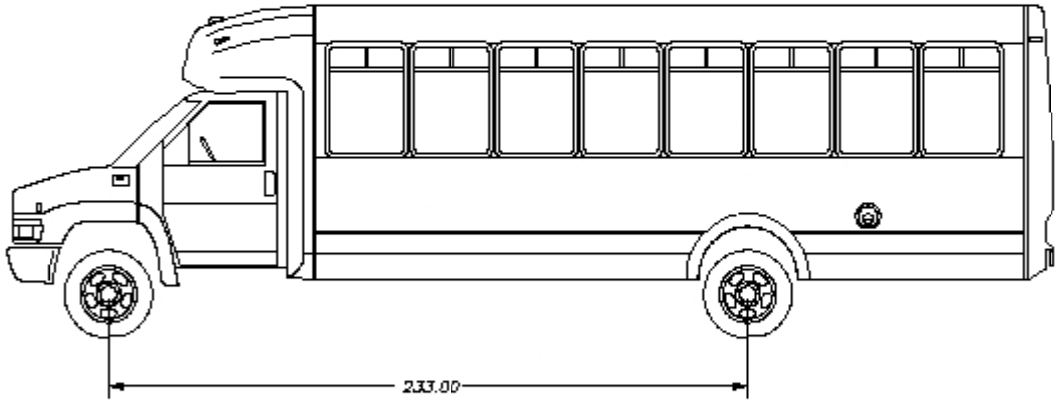

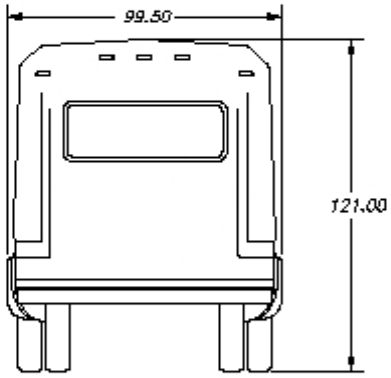

NOTE: OVERALL HEIGHT MAY VARY DUE TO SPRING PKG OPTIONS AND DOES NOT REFLECT A ROOF HATCH.

233" WHEELBASE 29.50 X 41.50 WINDOWS SHOWN 46" ENTRY DOOR CASSETTE LIFT

NEXT ASSEMBLY: NONE	DRAWING INFORMATION						
SUPERCEDES: NONE	DRAWN: WCOUILLAN	CKD:					
DO NOT SCALE DRAWING	DATE:	SIZE: A					
MARK PART NUMBER AND REVISION ON ALL PARTS	SCALE: 1/64	WGT:					
THIS DRAWING IS THE PROPERTY OF ELDORADO NATIONAL COMPANY, A THOR INDUSTRIES COMPANY AND IS NOT TO BE DUPLICATED OR USED IN ANY WAY DETRIMENTAL TO THEIR BEST INTEREST. REV. 02/02	TOLERANCE UNLESS SPECIFIED						
	FRACTIONS ± 1/16	–	BJM		RELEASE TO PRODUCTION		
	DECIMALS .00 ± .06						
	ANGLES ± 1 DEG.	REV.	BY	DATE	DESCRIPTION	RELEASE #	

ElDorado National
— a THOR company —
1655 WALL STREET
SALINA, KS. 67401

TITLE:
ELEVATION VIEWS, 320 CHEVY ELITE
46" ENTRY DOOR / CASSETTE LIFT

MATERIAL SPEC:

PART NUMBER
ELEV3219

PAGE
1 OF 1