SHEET NO.	SHEET REFERENCE NO.	DRAWING TITLE
1	E0.1	INDEX TO ELECTRICAL PLANS NO. 1
2	E0.2	INDEX TO ELECTRICAL PLANS NO. 2
3	E0.3	POWER AND LIGHTING SYMBOLS
4	E0.4	POWER AND LIGHTING GENERAL NOTES AND ABBREVIATIONS
5	E1.1	SOUTH SITE ELECTRICAL UTILITY PLAN NO. 1
6	E1.2	SOUTH SITE ELECTRICAL UTILITY PLAN NO. 2
7	E1.3	SOUTH SITE ELECTRICAL UTILITY PLAN NO. 3
8	E1.4	SOUTH SITE ELECTRICAL UTILITY PLAN NO. 4
9	E1.5	OMC SITE ELECTRICAL UTILITY PLAN
10	E1.6	NORTH SITE ELECTRICAL UTILITY PLAN NO. 1
11	E1.7	NORTH SITE ELECTRICAL UTILITY PLAN NO. 2
12	E1.8	NORTH SITE ELECTRICAL UTILITY PLAN NO. 3
13	E2.1	TUNNEL UTILITY AND GROUNDING PLAN NO. 1
14	E2.2	TUNNEL UTILITY AND GROUNDING PLAN NO. 2
15	E2.3	TUNNEL UTILITY AND GROUNDING PLAN NO. 3
16	E2.4	TUNNEL UTILITY AND GROUNDING PLAN NO. 4
17	E2.5	TUNNEL UTILITY AND GROUNDING PLAN NO. 5
18	E2.6	TUNNEL UTILITY AND GROUNDING PLAN NO. 6
19	E2.7	TUNNEL UTILITY AND GROUNDING PLAN NO. 7
20	E2.8	TUNNEL UTILITY AND GROUNDING PLAN NO. 8
21	E2.9	TUNNEL UTILITY AND GROUNDING PLAN NO. 9
22	E2.10	TUNNEL UTILITY AND GROUNDING PLAN NO. 10
23	E2.11	TUNNEL UTILITY AND GROUNDING PLAN NO. 11
24	E2.12	TUNNEL UTILITY AND GROUNDING PLAN NO. 12
25	E2.13	TUNNEL UTILITY AND GROUNDING PLAN NO. 13
26	E2.14	TUNNEL UTILITY AND GROUNDING PLAN NO. 14
27	E2.15	TUNNEL UTILITY AND GROUNDING PLAN NO. 15
28	E2.16	TUNNEL UTILITY AND GROUNDING PLAN NO. 16
29	E2.17	TUNNEL UTILITY AND GROUNDING PLAN NO. 17
30	E2.18	TUNNEL UTILITY AND GROUNDING PLAN NO. 18
31	E2.19	SOUTH EQUIPMENT CHAMBER UTILITY AND EQUIPMENT PLAN
32	E2.20	CENTER EQUIPMENT CHAMBER UTILITY AND EQUIPMENT PLAN
33	E2.21	NORTH EQUIPMENT CHAMBER UTILITY AND EQUIPMENT PLAN
34	E2.22	SOUTH EQUIPMENT CHAMBER GROUNDING PLAN
35	E2.23	CENTER EQUIPMENT CHAMBER GROUNDING PLAN
36	E2.24	NORTH EQUIPMENT CHAMBER GROUNDING PLAN
37	E2.25	NORTH PORTAL DEMOLITION PLAN
38	E3.1	TUNNEL LIGHTING PLAN NO. 1
39	E3.2	TUNNEL LIGHTING PLAN NO. 2
40	E3.3	TUNNEL LIGHTING PLAN NO. 3
41	E3.4	TUNNEL LIGHTING PLAN NO. 4
42	E3.5	TUNNEL LIGHTING PLAN NO. 5
43	E3.6	TUNNEL LIGHTING PLAN NO. 6
44	E3.7	TUNNEL LIGHTING PLAN NO. 7
45	E3.8	TUNNEL LIGHTING PLAN NO. 8
46	E3.9	TUNNEL LIGHTING PLAN NO. 9
47	E3.10	TUNNEL LIGHTING PLAN NO. 10
48	E3.11	TUNNEL LIGHTING PLAN NO. 11
49	E3.12	TUNNEL LIGHTING PLAN NO. 12
50	E3.13	TUNNEL LIGHTING PLAN NO. 13
51	E3.14	TUNNEL LIGHTING PLAN NO. 14
52	E3.15	TUNNEL LIGHTING PLAN NO. 15
53	E3.16	TUNNEL LIGHTING PLAN NO. 16
54	E3.17	TUNNEL LIGHTING PLAN NO. 17
55	E3.18	TUNNEL LIGHTING PLAN NO. 18
56	E3.19	SOUTH EQUIPMENT CHAMBER LIGHTING PLAN
57	E3.20	CENTER EQUIPMENT CHAMBER LIGHTING PLAN
58	E3.21	NORTH EQUIPMENT CHAMBER LIGHTING PLAN
59	E3.22	CROSS PASSAGE LIGHTING PLAN
60	E4.1	TUNNEL POWER PLAN NO.1
61	E4.2	TUNNEL POWER PLAN NO.2
62	E4.3	TUNNEL POWER PLAN NO.3
63	E4.4	TUNNEL POWER PLAN NO.4
64	E4.5	TUNNEL POWER PLAN NO.5
65	E4.6	TUNNEL POWER PLAN NO.6
66	E4.7	TUNNEL POWER PLAN NO.7
67	E4.8	TUNNEL POWER PLAN NO.8
68	E4.9	TUNNEL POWER PLAN NO.9
69	E4.10	TUNNEL POWER PLAN NO.10
70	E4.11	TUNNEL POWER PLAN NO.11
71	E4.12	TUNNEL POWER PLAN NO.12
72	E4.13	TUNNEL POWER PLAN NO.13
73	E4.14	TUNNEL POWER PLAN NO.14
74	E4.15	TUNNEL POWER PLAN NO.15
75	E4.16	TUNNEL POWER PLAN NO.16
76	E4.17	TUNNEL POWER PLAN NO.17
77	E4.18	TUNNEL POWER PLAN NO.18
78	E4.19	SOUTH EQUIPMENT CHAMBER POWER PLAN
79	E4.20	CENTER EQUIPMENT CHAMBER POWER PLAN
80	E4.21	NORTH EQUIPMENT CHAMBER POWER PLAN
81	E4.22	TYPICAL CROSS PASSAGE POWER PLAN
82	E4.23	ENLARGED POWER PLAN - SOUTH
83	E4.24	ENLARGED POWER PLAN - NORTH
84	E5.1	TYPICAL TUNNEL SECTIONS
85	E5.2	SOUTH EQUIPMENT CHAMBER TYPICAL SECTION
86	E5.3	CENTER EQUIPMENT CHAMBER TYPICAL SECTION
87	E5.4	NORTH EQUIPMENT CHAMBER TYPICAL SECTION
88	E6.1	MEDIUM VOLTAGE ONE-LINE NO.1
89	E6.2	MEDIUM VOLTAGE ONE-LINE NO.2
90	E6.3	SOUTH EQUIPMENT CHAMBER POWER ONE LINE NO. 1
91	E6.4	SOUTH EQUIPMENT CHAMBER POWER ONE LINE NO. 2
92	E6.5	CENTER EQUIPMENT CHAMBER POWER ONE LINE NO. 1
93	E6.6	CENTER EQUIPMENT CHAMBER POWER ONE LINE NO. 2
94	E6.7	NORTH EQUIPMENT CHAMBER POWER ONE LINE NO. 1
95	E6.8	NORTH EQUIPMENT CHAMBER POWER ONE LINE NO. 2
96	E6.9	GROUNDING RISER DIAGRAM
97	E6.10	LIGHTING SCHEMATIC DIAGRAM NO. 1
98	E6.11	LIGHTING SCHEMATIC DIAGRAM NO. 2
99	E6.12	LIGHTING SCHEMATIC DIAGRAM NO. 3
100	E6.13	LIGHTING SCHEMATIC DIAGRAM NO. 4
101	E6.14	LIGHTING SCHEMATIC DIAGRAM NO. 5
102	E6.15	LIGHTING SCHEMATIC DIAGRAM NO. 6
103	E6.16	POWER SCHEMATIC DIAGRAM NO. 1
104	E6.17	POWER SCHEMATIC DIAGRAM NO. 2
105	E6.18	POWER SCHEMATIC DIAGRAM NO. 3
106	E6.19	LIGHTING CONDUIT DIAGRAM NO. 1
107	E6.20	LIGHTING CONDUIT DIAGRAM NO. 2
108	E7.1	EQUIPMENT ELEVATIONS - SOUTH EQUIPMENT CHAMBER
109	E7.2	EQUIPMENT ELEVATIONS - CENTER EQUIPMENT CHAMBER
110	E7.3	EQUIPMENT ELEVATIONS - NORTH EQUIPMENT CHAMBER
111	E7.4	EQUIPMENT ELEVATIONS - OMC BUILDING
112	E7.5	EQUIPMENT ELEVATIONS - MISCELLANEOUS NO. 1
113	E7.6	EQUIPMENT ELEVATIONS - MISCELLANEOUS NO. 2
114	E8.1	MEDIUM VOLTAGE UTILITY DETAILS NO. 1
115	E8.2	MEDIUM VOLTAGE UTILITY DETAILS NO. 2
116	E8.3	MEDIUM VOLTAGE UTILITY DETAILS NO. 3
117	E8.4	MEDIUM VOLTAGE UTILITY DETAILS NO. 4
118	E8.5	MEDIUM VOLTAGE UTILITY DETAILS NO. 5
119	E8.6	MEDIUM VOLTAGE UTILITY DETAILS NO. 6
120	E8.7	LIGHTING DETAILS NO. 1
121	E8.8	LIGHTING DETAILS NO. 2
122	E8.9	LIGHTING DETAILS NO. 3
123	E8.10	LIGHTING DETAILS NO. 4
124	E8.11	J-BOX DETAILS NO. 1
125	E8.12	J-BOX DETAILS NO. 2
126	E8.13	J-BOX DETAILS NO. 3
127	E8.14	STRUT SUPPORT SYSTEM DETAILS
128	E8.15	POWER DETAILS
129	E8.16	CHAMBER POWER DETAILS
130	E8.17	SCALLOP AREA LIGHTING DETAILS
131	E8.18	TEXTURED AREA LIGHTING DETAILS
132	E9.1	LIGHTING SCHEDULE
133	E9.2	TUNNEL LIGHTING FIXTURE SCHEDULE NO. 1
134	E9.3	TUNNEL LIGHTING FIXTURE SCHEDULE NO. 2
135	E9.4	TUNNEL LIGHTING FIXTURE SCHEDULE NO. 3
136	E9.5	TUNNEL LIGHTING FIXTURE SCHEDULE NO. 4
137	E9.6	TUNNEL LIGHTING FIXTURE SCHEDULE NO. 5
138	E9.7	TUNNEL LIGHTING FIXTURE SCHEDULE NO. 6
139	E9.8	TUNNEL LIGHTING FIXTURE SCHEDULE NO. 7
140	E9.9	TUNNEL LIGHTING FIXTURE SCHEDULE NO. 8
141	E9.10	TUNNEL LIGHTING FIXTURE SCHEDULE NO. 9
142	E9.11	TUNNEL LIGHTING FIXTURE SCHEDULE NO. 10
143	E9.12	TUNNEL LIGHTING FIXTURE SCHEDULE NO. 11
144	E9.13	TUNNEL LIGHTING FIXTURE SCHEDULE NO. 12
145	E10.1	TUNNEL LIGHTING J-BOX SCHEDULE NO.1
146	E10.2	TUNNEL LIGHTING J-BOX SCHEDULE NO.2
147	E10.3	TUNNEL LIGHTING J-BOX SCHEDULE NO.3
148	E10.4	TUNNEL LIGHTING J-BOX SCHEDULE NO.4
149	E11.1	POWER J-BOX TYPE SCHEDULE
150	E11.2	CIRCUIT SCHEDULE NO. 1
151	E11.3	CIRCUIT SCHEDULE NO. 2
152	E12.1	PANEL SCHEDULES NO. 1
153	E12.2	PANEL SCHEDULES NO. 2
154	E12.3	PANEL SCHEDULES NO. 3
155	E12.4	PANEL SCHEDULES NO. 4
156	E14.1	OMC GROUNDING PLAN
157	E14.2	OMC UTILITY AND GROUNDING PLAN
157A	E14.3	OMC, SWITCHBOARD M ONE-LINE DIAGRAM AND ELEVATION

PS&E SUBMITTAL (11/18/05)
NOT FOR CONSTRUCTION

Caltrans Metric

DIST	COUNTY	ROUTE	KILOMETER POST TOTAL PROJECT	SHEET No	TOTAL SHEETS
04	SM	1			

Min Maung 9/30/05
REGISTERED ELECTRICAL ENGINEER

PLANS APPROVAL DATE

REGISTERED PROFESSIONAL ENGINEER MIN MAUNG No. E012210 Exp. 09/30/06 ELECT STATE OF CALIFORNIA

The State of California or its officers or agents shall not be responsible for the accuracy or completeness of electronic copies of this plan sheet.

HNTB *Corporation*
200 E. SANDPOINTE AVENUE, SUITE 200
SANTA ANA, CALIFORNIA 92707

Caltrans now has a web site! To get to the web site, go to: http://www.dot.ca.gov

CALCULATED/ DESIGNED BY	P. WHOBREY	DATE	REVISED BY
CHECKED BY	M. MAUNG	9/30/05	DATE REVISED

DESIGN OVERSIGHT
BEHZAD GOLEMOHAMMADI

STATE OF CALIFORNIA - DEPARTMENT OF TRANSPORTATION
Caltrans
ELECTRICAL

INDEX TO ELECTRICAL PLANS NO. 1

E0.1

LAST REVISION 00-00-00
DATE PLOTTED => 09-NOV-2005
TIME PLOTTED => 15:04

RELATIVE BORDER SCALE IS IN MILLIMETERS 0 20 40 60 80

USERNAME => lGraham
DGN FILE => 41123uza001.dgn

CU 04240

EA 1123U1

DIST	COUNTY	ROUTE	KILOMETER POST TOTAL PROJECT	SHEET No	TOTAL SHEETS
04	SM	1			

Caltrans Metric

Min Maung 9/30/05
REGISTERED ELECTRICAL ENGINEER

PLANS APPROVAL DATE

REGISTERED PROFESSIONAL ENGINEER
MIN MAUNG
No. E012210
Exp. 09/30/06
ELECT
STATE OF CALIFORNIA

The State of California or its officers or agents shall not be responsible for the accuracy or completeness of electronic copies of this plan sheet.

HNTB *Corporation*
200 E. SANDPOINTE AVENUE, SUITE 200
SANTA ANA, CALIFORNIA 92707

Caltrans now has a web site! To get to the web site, go to: http://www.dot.ca.gov

SHEET NO.	SHEET REFERENCE NO.	DRAWING TITLE
158	ET0.1	SYSTEMS SYMBOLS AND ABBREVIATIONS
159	ET1.1	SOUTH SITE SYSTEM PLAN NO. 1
160	ET1.2	SOUTH SITE SYSTEM PLAN NO. 2
161	ET1.3	SOUTH SITE SYSTEM PLAN NO. 3
162	ET1.4	SOUTH SITE SYSTEM PLAN NO. 4
163	ET1.5	OMC SITE SYSTEM PLAN
164	ET1.6	NORTH SITE SYSTEM PLAN NO. 1
165	ET1.7	NORTH SITE SYSTEM PLAN NO. 2
166	ET1.8	NORTH SITE SYSTEM PLAN NO. 3
167	ET2.1	TUNNEL TRAFFIC SYSTEM PLAN NO. 1
168	ET2.2	TUNNEL TRAFFIC SYSTEM PLAN NO. 2
169	ET2.3	TUNNEL TRAFFIC SYSTEM PLAN NO. 3
170	ET2.4	TUNNEL TRAFFIC SYSTEM PLAN NO. 4
171	ET2.5	TUNNEL TRAFFIC SYSTEM PLAN NO. 5
172	ET2.6	TUNNEL TRAFFIC SYSTEM PLAN NO. 6
173	ET2.7	TUNNEL TRAFFIC SYSTEM PLAN NO. 7
174	ET2.8	TUNNEL TRAFFIC SYSTEM PLAN NO. 8
175	ET2.9	TUNNEL TRAFFIC SYSTEM PLAN NO. 9
176	ET2.10	TUNNEL TRAFFIC SYSTEM PLAN NO. 10
177	ET2.11	TUNNEL TRAFFIC SYSTEM PLAN NO. 11
178	ET2.12	TUNNEL TRAFFIC SYSTEM PLAN NO. 12
179	ET2.13	TUNNEL TRAFFIC SYSTEM PLAN NO. 13
180	ET2.14	TUNNEL TRAFFIC SYSTEM PLAN NO. 14
181	ET2.15	TUNNEL TRAFFIC SYSTEM PLAN NO. 15
182	ET2.16	TUNNEL TRAFFIC SYSTEM PLAN NO. 16
183	ET2.17	TUNNEL TRAFFIC SYSTEM PLAN NO. 17
184	ET2.18	TUNNEL TRAFFIC SYSTEM PLAN NO. 18
185	ET4.1	TUNNEL FIRE LIFE SAFETY PLAN NO. 1
186	ET4.2	TUNNEL FIRE LIFE SAFETY PLAN NO. 2
187	ET4.3	TUNNEL FIRE LIFE SAFETY PLAN NO. 3
188	ET4.4	TUNNEL FIRE LIFE SAFETY PLAN NO. 4
189	ET4.5	TUNNEL FIRE LIFE SAFETY PLAN NO. 5
190	ET4.6	TUNNEL FIRE LIFE SAFETY PLAN NO. 6
191	ET4.7	TUNNEL FIRE LIFE SAFETY PLAN NO. 7
192	ET4.8	TUNNEL FIRE LIFE SAFETY PLAN NO. 8
193	ET4.9	TUNNEL FIRE LIFE SAFETY PLAN NO. 9
194	ET4.10	TUNNEL FIRE LIFE SAFETY PLAN NO. 10
195	ET4.11	TUNNEL FIRE LIFE SAFETY PLAN NO. 11
196	ET4.12	TUNNEL FIRE LIFE SAFETY PLAN NO. 12
197	ET4.13	TUNNEL FIRE LIFE SAFETY PLAN NO. 13
198	ET4.14	TUNNEL FIRE LIFE SAFETY PLAN NO. 14
199	ET4.15	TUNNEL FIRE LIFE SAFETY PLAN NO. 15
200	ET4.16	TUNNEL FIRE LIFE SAFETY PLAN NO. 16
201	ET4.17	TUNNEL FIRE LIFE SAFETY PLAN NO. 17
202	ET4.18	TUNNEL FIRE LIFE SAFETY PLAN NO. 18
203	ET4.19	SOUTH EQUIPMENT CHAMBER SYSTEMS PLAN
204	ET4.20	CENTER EQUIPMENT CHAMBER SYSTEMS PLAN
205	ET4.21	NORTH EQUIPMENT CHAMBER SYSTEMS PLAN
206	ET5.1	TUNNEL SECTION ELEVATION
207	ET6.1	FIRE ALARM AND DETECTION DIAGRAM
208	ET6.2	RADIO REBROADCAST SYSTEM DIAGRAM
209	ET6.3	TELEPHONE SYSTEM RISER DIAGRAM
210	ET6.4	TRAFFIC CONTROL SYSTEMS DIAGRAM
211	ET6.5	CCTV SYSTEM INTERCONNECTION DIAGRAM
212	ET6.6	SYSTEM INTERCONNECTION DIAGRAM NO. 1
213	ET6.7	SYSTEM INTERCONNECTION DIAGRAM NO. 2
214	ET6.8	SYSTEM INTERCONNECTION DIAGRAM NO. 3
215	ET7.1	TRAFFIC SYSTEMS DETAILS NO. 1
216	ET7.2	TRAFFIC SYSTEMS DETAILS NO. 2
217	ET7.3	TRAFFIC AND SECURITY SYSTEM DETAILS
218	ET7.4	CCTV DETAILS
219	ET7.5	RADIO SYSTEM DETAILS
220	ET7.6	FIRE DETECTION SYSTEM DETAILS NO. 1
221	ET7.7	FIRE DETECTION SYSTEM DETAILS NO. 2
222	ET7.8	CONDUIT DETAILS
223	ET7.9	CONDUIT DUCT ASSIGNMENTS
224	ET7.10	DUCTBANK DETAILS
225	ET8.1	SYSTEMS CABLE SCHEDULE
226	ET8.2	JUNCTION BOX SCHEDULE
227	ET8.3	SYSTEMS EQUIPMENT SCHEDULE
228	ET14.1	OMC SYSTEMS PLAN NO. 1
229	ET14.2	OMC SYSTEMS PLAN NO. 2
230	ET14.3	OMC SYSTEMS LAYOUT

SHEET NO.	SHEET REFERENCE NO.	DRAWING TITLE
231	EI0.1	INSTRUMENTATION SYMBOLS AND ABBREVIATIONS
232	EI0.2	TUNNEL CONTROLS GENERAL NOTES
233	EI1.1	SOUTH SITE TUNNEL CONTROLS PLAN NO. 1
234	EI1.2	SOUTH SITE TUNNEL CONTROLS PLAN NO. 2
235	EI1.3	SOUTH SITE TUNNEL CONTROLS PLAN NO. 3
236	EI1.4	SOUTH SITE TUNNEL CONTROLS PLAN NO. 4
237	EI1.5	OMC SITE TUNNEL CONTROLS PLAN
238	EI1.6	NORTH SITE TUNNEL CONTROLS PLAN NO. 1
239	EI1.7	NORTH SITE TUNNEL CONTROLS PLAN NO. 2
240	EI1.8	NORTH SITE TUNNEL CONTROLS PLAN NO. 3
241	EI2.1	TUNNEL INSTRUMENTATION PLAN NO. 1
242	EI2.2	TUNNEL INSTRUMENTATION PLAN NO. 2
243	EI2.3	TUNNEL INSTRUMENTATION PLAN NO. 3
244	EI2.4	TUNNEL INSTRUMENTATION PLAN NO. 4
245	EI2.5	TUNNEL INSTRUMENTATION PLAN NO. 5
246	EI2.6	TUNNEL INSTRUMENTATION PLAN NO. 6
247	EI2.7	TUNNEL INSTRUMENTATION PLAN NO. 7
248	EI2.8	TUNNEL INSTRUMENTATION PLAN NO. 8
249	EI2.9	TUNNEL INSTRUMENTATION PLAN NO. 9
250	EI2.10	TUNNEL INSTRUMENTATION PLAN NO. 10
251	EI2.11	TUNNEL INSTRUMENTATION PLAN NO. 11
252	EI2.12	TUNNEL INSTRUMENTATION PLAN NO. 12
253	EI2.13	TUNNEL INSTRUMENTATION PLAN NO. 13
254	EI2.14	TUNNEL INSTRUMENTATION PLAN NO. 14
255	EI2.15	TUNNEL INSTRUMENTATION PLAN NO. 15
256	EI2.16	TUNNEL INSTRUMENTATION PLAN NO. 16
257	EI2.17	TUNNEL INSTRUMENTATION PLAN NO. 17
258	EI2.18	TUNNEL INSTRUMENTATION PLAN NO. 18
259	EI2.19	SOUTH EQUIPMENT CHAMBER CONTROLS PLAN
260	EI2.20	CENTER EQUIPMENT CHAMBER CONTROLS PLAN
261	EI2.21	NORTH EQUIPMENT CHAMBER CONTROLS PLAN
262	EI5.1	TYPICAL TUNNEL SECTIONS
263	EI6.1	ELEMENTARY CONTROL LADDER DIAGRAMS - JET FANS 1 AND 2
264	EI6.2	ELEMENTARY CONTROL LADDER DIAGRAMS - JET FANS 3 AND 4
265	EI6.3	ELEMENTARY CONTROL LADDER DIAGRAMS - JET FANS 5 AND 6
266	EI6.4	ELEMENTARY CONTROL LADDER DIAGRAMS - JET FANS 7 AND 8
267	EI6.5	ELEMENTARY CONTROL LADDER DIAGRAMS - JET FANS 9 AND 10
268	EI6.6	ELEMENTARY CONTROL LADDER DIAGRAMS - JET FANS 11 AND 12
269	EI6.7	ELEMENTARY CONTROL LADDER DIAGRAMS - JET FANS 13 AND 14
270	EI6.8	ELEMENTARY CONTROL LADDER DIAGRAMS - JET FANS 15 AND 16
271	EI6.9	ELEMENTARY CONTROL LADDER DIAGRAMS - JET FANS 17 AND 18
272	EI6.10	ELEMENTARY CONTROL LADDER DIAGRAMS - JET FANS 19 AND 20
273	EI6.11	ELEMENTARY CONTROL LADDER DIAGRAMS - JET FANS 21 AND 22
274	EI6.12	ELEMENTARY CONTROL LADDER DIAGRAMS - JET FANS 23 AND 24
275	EI6.13	ELEMENTARY CONTROL LADDER DIAGRAMS - JET FANS 25 AND 26
276	EI6.14	ELEMENTARY CONTROL LADDER DIAGRAMS - JET FANS 27 AND 28
277	EI6.15	ELEMENTARY CONTROL LADDER DIAGRAMS - JET FANS 29 AND 30
278	EI6.16	ELEMENTARY CONTROL LADDER DIAGRAMS - JET FANS 31 AND 32
279	EI6.17	ELEMENTARY CONTROL LADDER DIAGRAMS - CP FANS 1 AND 2
280	EI6.18	ELEMENTARY CONTROL LADDER DIAGRAMS - CP FANS 3 AND 4
281	EI6.19	ELEMENTARY CONTROL LADDER DIAGRAMS - CP FANS 5 AND 6
282	EI6.20	ELEMENTARY CONTROL LADDER DIAGRAMS - CP FANS 7 AND 8
283	EI6.21	ELEMENTARY CONTROL LADDER DIAGRAMS - CP FANS 9 AND 10
284	EI6.23	ELEMENTARY CONTROL LADDER DIAGRAMS - TUNNEL LIGHTING NO. 1
285	EI6.24	ELEMENTARY CONTROL LADDER DIAGRAMS - TUNNEL LIGHTING NO. 2
286	EI6.25	ELEMENTARY CONTROL LADDER DIAGRAMS - TUNNEL LIGHTING NO. 3
287	EI6.26	ELEMENTARY CONTROL LADDER DIAGRAMS - TUNNEL LIGHTING NO. 4
288	EI6.27	ELEMENTARY CONTROL LADDER DIAGRAMS - TUNNEL LIGHTING NO. 5
289	EI6.28	ELEMENTARY CONTROL LADDER DIAGRAMS - TUNNEL LIGHTING NO. 6
290	EI6.29	ELEMENTARY CONTROL LADDER DIAGRAM - SOUTH EQUIPMENT CHAMBER NO. 1
291	EI6.30	ELEMENTARY CONTROL LADDER DIAGRAM - SOUTH EQUIPMENT CHAMBER NO. 2
292	EI6.31	ELEMENTARY CONTROL LADDER DIAGRAM - CENTER EQUIPMENT CHAMBER NO. 1
293	EI6.32	ELEMENTARY CONTROL LADDER DIAGRAM - CENTER EQUIPMENT CHAMBER NO. 2
294	EI6.33	ELEMENTARY CONTROL LADDER DIAGRAM - NORTH EQUIPMENT CHAMBER NO. 1
295	EI6.34	ELEMENTARY CONTROL LADDER DIAGRAM - NORTH EQUIPMENT CHAMBER NO. 2
296	EI6.35	ELEMENTARY CONTROL LADDER DIAGRAMS - LEECH WATER PUMPS
297	EI6.36	ELEMENTARY CONTROL LADDER DIAGRAMS - OMC BUILDING
298	EI7.1	VENTILATION AND LIGHTING CONTROLS DETAILS
299	EI7.2	VENTILATION CONTROLS DETAILS
300	EI7.3	CROSS PASSAGE CONTROLS DETAILS
301	EI7.4	SYSTEM COMM BUS FO DIAGRAM
302	EI7.5	I/O BUS C AND D FO DIAGRAM
303	EI7.6	I/O BUS E AND F FO DIAGRAM
304	EI7.7	I/O BUS J AND K FO DIAGRAM
305	EI7.8	TUNNEL CONTROLS DETAILS
306	EI8.1	CONTROL INPUT/OUTPUT SCHEDULES NO. 1
307	EI8.2	CONTROL INPUT/OUTPUT SCHEDULES NO. 2

SHEET NO.	SHEET REFERENCE NO.	DRAWING TITLE
308	EI8.3	CONTROL INPUT/OUTPUT SCHEDULES NO. 3
309	EI8.4	CONTROL INPUT/OUTPUT SCHEDULES NO. 4
310	EI8.5	CONTROL CONDUIT SCHEDULES NO. 1
311	EI8.6	CONTROL CONDUIT SCHEDULES NO. 2
312	EI15.1	TUNNEL CONTROLS RISER DIAGRAM
313	EI15.2	TUNNEL CONTROLS RISER DIAGRAM
314	EI15.3	TUNNEL CONTROLS RISER DIAGRAM
315	EI15.4	TUNNEL CONTROLS RISER DIAGRAM
316	EI15.5	TUNNEL CONTROLS RISER DIAGRAM
317	EI16.1	CONTROL INPUT/OUTPUT WIRING DIAGRAM NO. 1
318	EI16.2	CONTROL INPUT/OUTPUT WIRING DIAGRAM NO. 2
319	EI16.3	CONTROL INPUT/OUTPUT WIRING DIAGRAM NO. 3
320	EI16.4	CONTROL INPUT/OUTPUT WIRING DIAGRAM NO. 4
321	EI16.5	CONTROL INPUT/OUTPUT WIRING DIAGRAM NO. 5
322	EI16.6	CONTROL INPUT/OUTPUT WIRING DIAGRAM NO. 6
323	EI16.7	CONTROL INPUT/OUTPUT WIRING DIAGRAM NO. 7
324	EI16.8	CONTROL INPUT/OUTPUT WIRING DIAGRAM NO. 8
325	EI16.9	CONTROL INPUT/OUTPUT WIRING DIAGRAM NO. 9
326	EI16.10	CONTROL INPUT/OUTPUT WIRING DIAGRAM NO. 10
327	EI16.11	CONTROL INPUT/OUTPUT WIRING DIAGRAM NO. 11
328	EI16.12	CONTROL INPUT/OUTPUT WIRING DIAGRAM NO. 12
329	EI16.13	CONTROL INPUT/OUTPUT WIRING DIAGRAM NO. 13
330	EI16.14	CONTROL INPUT/OUTPUT WIRING DIAGRAM NO. 14
331	EI16.15	CONTROL INPUT/OUTPUT WIRING DIAGRAM NO. 15
332	EI16.16	CONTROL INPUT/OUTPUT WIRING DIAGRAM NO. 16
333	EI16.17	CONTROL INPUT/OUTPUT WIRING DIAGRAM NO. 17
334	EI16.18	CONTROL INPUT/OUTPUT WIRING DIAGRAM NO. 18
335	EI16.19	CONTROL INPUT/OUTPUT WIRING DIAGRAM NO. 19
336	EI16.20	CONTROL INPUT/OUTPUT WIRING DIAGRAM NO. 20
337	EI16.21	CONTROL INPUT/OUTPUT WIRING DIAGRAM NO. 21
338	EI16.22	CONTROL INPUT/OUTPUT WIRING DIAGRAM NO. 22
339	EI16.23	CONTROL INPUT/OUTPUT WIRING DIAGRAM NO. 23
340	EI16.24	CONTROL INPUT/OUTPUT WIRING DIAGRAM NO. 24
341	EI16.26	CONTROL INPUT/OUTPUT WIRING DIAGRAM NO. 26
342	EI16.27	CONTROL INPUT/OUTPUT WIRING DIAGRAM NO. 27
343	EI16.28	CONTROL INPUT/OUTPUT WIRING DIAGRAM NO. 28
344	EI16.29	CONTROL INPUT/OUTPUT WIRING DIAGRAM NO. 29
345	EI16.30	CONTROL INPUT/OUTPUT WIRING DIAGRAM NO. 30
346	EI16.31	CONTROL INPUT/OUTPUT WIRING DIAGRAM NO. 31
347	EI16.32	CONTROL INPUT/OUTPUT WIRING DIAGRAM NO. 32
348	EI17.1	CONTROL I/O DETAILS
349	EI17.2	CONTROL I/O DETAILS
350	EI17.3	CONTROL I/O DETAILS
351	EI17.4	SEISMIC MONITORING DETAILS
352	EI17.5	CROSS PASSAGE INTERFACES NO. 1
353	EI17.6	CROSS PASSAGE INTERFACES NO. 2
354	EI17.7	VENTILATION CONTROLS DETAILS
355	EI17.8	TUNNEL CONTROL PANEL TC-01 DETAILS
356	EI17.9	TUNNEL CONTROL PANEL TC-02 DETAILS
357	EI17.10	TUNNEL CONTROL PANEL TC-03 DETAILS
358	EI17.11	TUNNEL CONTROL PANEL TC-04 DETAILS

PS&E SUBMITTAL (11/18/05)
NOT FOR CONSTRUCTION

INDEX TO ELECTRICAL PLANS NO. 2

E0.2

STATE OF CALIFORNIA - DEPARTMENT OF TRANSPORTATION
Caltrans
ELECTRICAL

DESIGN OVERSIGHT	BEHZAD GOLEMOHAMMADI
CALCULATED/ DESIGNED BY	P. WHOBREY
CHECKED BY	M. MAUNG
DATE	9/30/05
REVISED BY	DATE REVISED

DATE PLOTTED => 09-NOV-2005
TIME PLOTTED => 15:05
LAST REVISION 00-00-00

RELATIVE BORDER SCALE IS IN MILLIMETERS 0 20 40 60 80

USERNAME => IGraham
DGN FILE => 41123uza002.dgn

CU 04240

EA 1123U1

DIST	COUNTY	ROUTE	KILOMETER POST TOTAL PROJECT	SHEET No	TOTAL SHEETS
04	SM	1			

Min Maung 9/30/05
REGISTERED ELECTRICAL ENGINEER

PLANS APPROVAL DATE

REGISTERED PROFESSIONAL ENGINEER MIN MAUNG No. E012210 Exp. 09/30/06 ELECT STATE OF CALIFORNIA

The State of California or its officers or agents shall not be responsible for the accuracy or completeness of electronic copies of this plan sheet.

HNTB *Corporation*
200 E. SANDPOINTE AVENUE, SUITE 200
SANTA ANA, CALIFORNIA 92707

Caltrans now has a web site! To get to the web site, go to: http://www.dot.ca.gov

PLAN SYMBOLS

- CONDUIT: UP, DOWN, CAPPED
- CONDUIT, CONCEALED
- CONDUIT, EXPOSED
- E — CONDUIT, EMBEDDED (LINETYPE SCALE IS REDUCED IN PLACES FOR CLARITY)
- DB — UNDERGROUND DUCT BANK, ENCASED (LINETYPE SCALE IS REDUCED IN PLACES FOR CLARITY)
- BG — GROUND, BURIED
- G — GROUND, EXPOSED
- BOLTED CONNECTION
- EXOTHERMIC WELD CONNECTION
- NEUTRAL CONDUCTORS
- HOT CONDUCTORS
- PNL E1 CKT 17,18 — HOMERUN CALLOUT INDICATING PANEL AND CIRCUIT NUMBERS WHERE CONDUIT IDENTIFIERS ARE NOT USED, CIRCUITS SHALL HAVE 2#12 WIRES PLUS 1#12 GND IN 21 mm CONDUIT, UNO BY NOTES OR HATCHES, HATCHES (IF USED) INDICATE NUMBER OF CONDUCTORS.
- DUPLEX RECEPTACLE, 457 AFF
- QUAD RECEPTACLE, TOP OF COMM RACK
- JUNCTION BOX, ON STRUT
- JUNCTION BOX, WALL MOUNTED
- JUNCTION BOX, EMBEDDED
- A — J-BOX TYPE
- LIGHTING J-BOX, EMBEDDED (SEE LIGHTING J-BOX SCHEDULE)
- DISCONNECT SWITCH
- COMBINATION MOTOR STARTER
- EQUIPMENT CONNECTION
- SINGLE PHASE MOTOR EQUIPMENT ID AND KW AS NOTED
- THREE PHASE MOTOR EQUIPMENT ID AND KW AS NOTED
- GROUND ROD
- 2-32W T8 CEILING/STRUT MOUNTED
- 4' INDUSTRIAL FLUORESCENT, PENDANT MOUNTED OR STRUT MOUNTED.
- ON EMERGENCY SOURCE
- SINGLE FACE EXIT SIGN - WALL MOUNTED
- DOUBLE FACE EXIT SIGN - STRUT MOUNTED
- DOUBLE FACE EXIT SIGN - WALL MOUNTED

PLAN SYMBOLS (CONT.)

- VAPOR TIGHT, GLASS GLOBE - WALL MOUNTED
- MV-AP1 — MV = MEDIUM VOLTAGE VAULT; A = SOURCE A; P = PG&E; 1 = MANHOLE #1; SIZE = 2591(L) x 1372(W) x 1954(H)
- SYS — SYS= SYSTEMS VAULT; 1 = NUMBER; SIZE = 1219(L) x 1981(W) x 1676(H)
- MV-A3X — MV = MEDIUM VOLTAGE VAULT; A = SOURCE A; 3 = NUMBER; X = OUTSIDE TUNNEL; SIZE = 1750(L) x 1143(W) x 1954(H)
- MV-B2Y — MV = MEDIUM VOLTAGE VAULT; B = SOURCE B; 2 = NUMBER; Y = INSIDE TUNNEL; SIZE = 1750(L) x 1143(W) x 1270(H)
- PANELBOARD
- 1-003 L — DAYTIME TUNNEL LIGHT FIXTURE; M = MEDIUM LEVEL; L = LOW LEVEL; 1 = ROW NO.1; 003 = FIXTURE NUMBER
- 3-305 — DAYTIME TUNNEL LIGHT FIXTURE (24 HRS); 3 = ROW NO.3; 305 = FIXTURE NUMBER
- N1-04 — NIGHTTIME TUNNEL LIGHT FIXTURE; N1 = ROW NO.1; 04 = FIXTURE NUMBER
- LIGHT SWITCH
- 3 — 3-WAY LIGHT SWITCH
- MOTION SENSING LIGHT SWITCH

SCHEMATIC SYMBOLS

- FUSE
- SURGE ARRESTOR
- GROUND CONNECTION
- LIMIT SWITCH
- TRANSFORMER
- NORMALLY OPEN CONTACT; F - FORWARD; R - REVERSE
- NORMALLY CLOSED CONTACT
- BUS STAB OR LOAD BREAK ELBOW
- AUTOMATIC TRANSFER SWITCH
- DISCONNECT SWITCH
- CABLE TERMINATION
- MOTOR HEATER
- M — MOTOR OPERATED CIRCUIT BREAKER
- M — MULTI METER
- REDUCE VOLTAGE STARTER
- POTENTIAL TRANSFORMER
- CURRENT TRANSFORMER
- CIRCUIT BREAKER; SOLID STATE PROTECTION: "L" - LONG TIME CURRENT & DELAY; "S" - SHORT TIME PICK-UP & DELAY; "I" - INSTANTANEOUS PICK-UP; "G" - GROUND FAULT PICK-UP & DELAY; "Z" - ZONE INTERLOCK
- 15 KV, LOAD BREAK JUNCTION BOX
- 50/51 — PHASE PROTECTIVE DEVICE
- 4J L6 — LIGHTING CONDUIT IDENTIFIER: NUMBER IN BUBBLE INDICATES CONDUIT NUMBER, NUMBER NEXT TO BUBBLE INDICATES CIRCUIT BREAKER CUBICLE IN MCC.
- PS1-1 — POWER CONDUIT IDENTIFIER: P - POWER; S - SOURCE FROM SOUTH EQUIPMENT CHAMBER; C - SOURCE FROM CENTER EQUIPMENT CHAMBER; N - SOURCE FROM NORTH EQUIPMENT CHAMBER

GENERAL SYMBOLS

- X — SHEET NOTE CALLOUT
- X — PROJECT NOTE CALLOUT
- XX-X / XXX — STANDARD PLAN SHEET NUMBER; CALTRANS STANDARD PLAN REFERENCE (LARGE BUBBLE); STANDARD PLAN DETAIL NUMBER
- X / XX-X — DETAIL NUMBER; PROJECT DETAIL/PLAN REFERENCE (SMALL BUBBLE); SHEET NUMBER

PS&E SUBMITTAL (11/18/05)
NOT FOR CONSTRUCTION

POWER AND LIGHTING SYMBOLS

E0.3

CALCULATED/DESIGNED BY	P. WHOBREY	DATE 9/30/05
CHECKED BY	M. MAUNG	REVISED BY / DATE REVISED
DESIGN OVERSIGHT	BEHZAD GOLEMOHAMMADI	

STATE OF CALIFORNIA - DEPARTMENT OF TRANSPORTATION
Caltrans
ELECTRICAL

LAST REVISION 00-00-00 | DATE PLOTTED => 09-NOV-2005 | TIME PLOTTED => 15:05

RELATIVE BORDER SCALE IS IN MILLIMETERS 0 20 40 60 80

USERNAME => lGraham
DGN FILE => 41123uza003.dgn

CU 04240 | EA 1123U1

DIST	COUNTY	ROUTE	KILOMETER POST TOTAL PROJECT	SHEET No	TOTAL SHEETS
04	SM	1			

Min Maung 9/30/05
REGISTERED ELECTRICAL ENGINEER

PLANS APPROVAL DATE

REGISTERED PROFESSIONAL ENGINEER MIN MAUNG No. E012210 Exp. 09/30/06 ELECT STATE OF CALIFORNIA

The State of California or its officers or agents shall not be responsible for the accuracy or completeness of electronic copies of this plan sheet.

HNTB *Corporation*
200 E. SANDPOINTE AVENUE, SUITE 200
SANTA ANA, CALIFORNIA 92707

Caltrans now has a web site! To get to the web site, go to: http://www.dot.ca.gov

ABBREVIATIONS

A	AMPERE
AC	AIR CONDITIONING
AF	AMP FRAME
AFF	ABOVE FINISHED FLOOR
AIC	AMPERE INTERRUPTING CAPACITY
ALT	ALTERNATE
AMP	AMPERE
AT	AMP TRIP
ATS	AUTOMATIC TRANSFER SWITCH
AUTO	AUTOMATIC
AWG	AMERICAN WIRE GAUGE
BC	BARE COPPER
BKR	BREAKER
BLDG	BUILDING
C	CONDUIT
CB	CIRCUIT BREAKER
CCTV	CLOSED CIRCUIT TELEVISION
CDF	CONTROL DENSITY FACTOR
CKT	CIRCUIT
℄	CENTERLINE
CMS	CHANGEABLE MESSAGE SIGN
CO	CONDUIT ONLY
COMM	COMMUNICATIONS
CONN	CONNECTED
CONV	CONVENIENCE
CPEV	CROSS PASSAGE FOR EMERGENCY VEHICLES
CPP	CROSS PASSAGE FOR PEDESTRIAN
CT	CURRENT TRANSFORMER
CU	COPPER
DB	DIRECT BURIAL
DH	DUCT HEATER
DIA, Ø	DIAMETER, NOMINAL DIAMETER
DISC	DISCONNECT
DIV	DIVISION
DWH	DOMESTIC WATER HEATER
EGB	EQUIPMENT GROUND BUS
ELECT	ELECTRICAL
ELEV	ELEVATION
EMERG	EMERGENCY
EMS	EXTINGUISHABLE MESSAGE SIGN
EMT	ELECTRICAL METALLIC TUBING
EQUIP	EQUIPMENT
ETM	ELAPSED TIME METER
EXH	EXHAUST
EXIST	EXISTING
FACP	FIRE ALARM CONTROL PANEL
FC	FOOT CANDLES
FDR	FEEDER
FIP	FIELD INTERFACE PANEL
FLA	FULL LOAD AMPERES
FLEX	FLEXIBLE
FLUOR	FLUORESCENT
FP	FIRE PUMP
FTC	FIRE TELEPHONE CABINET
FVNR	FULL VOLTAGE NON-REVERSING
FVR	FULL VOLTAGE REVERSING
GA	GAGE
GB	GROUND BAR
GEN	GENERATOR
GFI	GROUND FAULT CIRCUIT INTERRUPTER
GFP	GROUND FAULT PROTECTION
G, GND	GROUND
HID	HIGH INTENSITY DISCHARGE
HPS	HIGH PRESSURE SODIUM
HR	HOME RUN
HTR	HEATER
HV	HEATING & VENTILATION
HVAC	HEATING, VENTILATION, AND AIR CONDITIONING
HZ	HERTZ
ID	IDENTIFICATION
IDF	INTERMEDIATE DISTRIBUTION FRAME
IG	ISOLATED GROUND
JB	JUNCTION BOX
JF	JET FAN
KCMIL	THOUSAND CIRCULAR MILS
KV	KILOVOLT
KVA	KILOVOLT-AMPERE
KW	KILOWATT
KWH	KILOWATT-HOUR
LDP	LINEAR DETECTOR PANEL
LED	LIGHT EMITTING DIODE
LTG	LIGHTING
LWP	LEACH WATER PUMP
M/E	MECHANICAL/ELECTRICAL
MAX	MAXIMUM
MCB	MAIN CIRCUIT BREAKER
MCC	MOTOR CONTROL CENTER
MCP	MOTOR CIRCUIT PROTECTOR
MECH	MECHANICAL
MFR	MANUFACTURER
MIN	MINIMUM
MLO	MAIN LUGS ONLY
MV	MEDIUM VOLTAGE
N	NEUTRAL
NB	NORTH BOUND
NC	NORMALLY CLOSED
NEC	NATIONAL ELECTRIC CODE
NEMA	NATIONAL ELECTRICAL MANUFACTURERS ASSOCIATION
NF	NON-FUSED
NFPA	NATIONAL FIRE PROTECTION ASSOCIATION
NIC	NOT IN CONTRACT - TO BE INSTALLED BY OTHERS
NO	NORMALLY OPEN
NSP	NORTHERN STATES POWER
OC	ON CENTER
OL	OVERLOAD
OMC	OPERATION AND MAINTENANCE CENTER
OV	OVER-VOLTAGE
P	POLE
PE	PHOTO-ELECTRIC CELL
PF	POWER FACTOR
PH	PHASE
PLC	PROGRAMMABLE LOGIC CONTROLLER
PNL	PANEL
PRI	PRIMARY
PROT	PROTECTION
PT	POTENTIAL TRANSFORMER
PVC	POLYVINYL CHLORIDE
QTY	QUANTITY
RECEPT	RECEPTACLE
RGS	RIGID GALVANIZED STEEL
RM	ROOM
RPM	ROTATIONS PER MINUTE
SB	SOUTH BOUND
SCA	SHORT CIRCUIT AMPS
SCH	SCHEDULE
SEC	SECONDARY
SEL	SELECTOR
SGB	SYSTEM GROUND BUS
SN, S/N	SOLID NEUTRAL
SP	SUMP PUMP
SPD	SPEED
SS	STAINLESS STEEL
SSCB	SOLID STATE CIRCUIT BREAKER
ST	SHUNT TRIP
SUSE	SUITABLE FOR USE FOR SERVICE ENTRANCE
SW	SWITCH
SWBD	SWITCHBOARD
TDR	TIME DELAY RELAY
TUN	TUNNEL
TVSS	TRANSIENT VOLTAGE SURGE SUPPRESSOR
UG	UNDERGROUND
UH	UNIT HEATER
UL	UNDERWRITER'S LABORATORY
UNO	UNLESS NOTED OTHERWISE
UPS	UNINTERRUPTIBLE POWER SUPPLY
UV	UNDER-VOLTAGE
V	VOLT
VA	VOLT-AMPERE
VAC	VOLT, ALTERNATING CURRENT
VFD	VARIABLE FREQUENCY DRIVE
VMS	VARIABLE MESSAGE SIGN
W	WIRE
W/	WITH
WP	WEATHERPROOF
XFMR	TRANSFORMER

EQUIPMENT ABBREVIATIONS FOR POWER SCHEMATIC DIAGRAMS

Bxxx SERIES -	BLUE LIGHTS (F3 IN LIGHTING SCHEDULE)
Cxxx SERIES -	CAMERA
FIP-xx SERIES -	FIELD INTERFACE PANEL (480V STAND-BY)
FIP(E)-xx SERIES -	FIELD INTERFACE PANEL (120V EMERGENCY)
JF-xx SERIES -	JET FANS
Vxxx SERIES -	VARIABLE MESSAGE SIGN
Wxxx SERIES -	WHITE LIGHT (F4 IN LIGHTING SCHEDULE)
Xxxx SERIES -	EXIT SIGN (E1IN LIGHTING SCHEDULE)

PROJECT NOTES

1. COORDINATE WITH PG&E POWER COMPANY AND FULFILL REQUIREMENTS FOR MEDIUM VOLTAGE SERVICE TO THE TUNNEL.
2. HEIGHT OF ELECTRICAL VAULT SHALL BE ADJUSTED PER SITE CONDITION.
3. PROVIDE ADDITIONAL PULL BOXES AS REQUIRED TO FACILITATE CABLE PULL INSIDE TUNNEL.
4. FOR TUNNEL LIGHTING SYSTEM CONDUIT AND WIRE SCHEDULE, SEE SHEET E6.10.
5. FOR POWER SYSTEM CONDUIT AND WIRE SCHEDULE, SEE SHEET E11.2 & E11.3.
6. FOR POWER SYSTEM J-BOX TYPE SCHEDULE SEE SHEET E11.1.
7. FOR TUNNEL FIXTURE SCHEDULE SEE SHEET E9.2 TO E9.13.

GENERAL NOTES

1. ALL CLAMPS, BOXES, FITTINGS, AND DEVICES SHALL BE BOLTED TO THE STRUCTURE UNLESS OTHERWISE SPECIFIED OR AS SHOWN ON PLAN.
2. ALL EXPOSED CIRCUIT OR CONDUCTOR CONNECTIONS SHALL BE PROTECTED WITH A CORROSION-INHIBITING COATING.
3. EXACT LOCATIONS OF THE EQUIPMENT MAY BE ADJUSTED TO FIELD CONDITIONS BY THE ENGINEER.
4. THE CONTRACTOR SHALL VERIFY ALL CONTROLLING FIELD DIMENSIONS AND CONDITIONS BEFORE ORDERING OR FABRICATING ANY MATERIALS.
5. ALL HOLES IN CABINETS, CONDUIT BODIES, OR JUNCTION BOXES SHALL BE COVERED WITH THE APPROPRIATE TYPE PLUG FOR THE APPLICATION AFTER ANY CONDUIT, CABLE, OR DEVICE IS REMOVED.
6. ANY ELECTRICAL ITEM OR WORK NOT SHOWN ON THE PLANS BUT MENTIONED IN THE SPECIAL PROVISIONS, OR VICE VERSA OR ANY INCIDENTAL ACCESSORIES NECESSARY TO MAKE THE WORK COMPLETE AND PERFECT IN ALL RESPECTS AND READY FOR OPERATION EVEN IF NOT PARTICULARLY SPECIFIED, SHALL BE FURNISHED, DELIVERED, AND INSTALLED BY THE CONTRACTOR WITHOUT ADDITIONAL COST TO THE STATE.
7. ALL CONNECTIONS OF TYPE 1 OR TYPE 2 CONDUITS TO JUNCTION OR PULL BOXES AND ANY METALLIC ITEM SHALL BE DONE USING THREADED INSULATED BONDING BUSHING (PRESSURE TYPE LUG) WITH GASKETED SEALING LOCKNUT AND MOISTURE PROOF HUB WITH "O" RING.
8. BEFORE COMPLETION OF ALL ELECTRICAL WORK THE CONTRACTOR SHALL LABEL CIRCUIT NUMBER AND/OR CALL BOX NUMBER IN EACH PULL BOX, JUNCTION BOX AND WIRING THROUGH.
9. IN ADDITION TO THE LATEST EDITION OF NATIONAL ELECTRICAL CODE (NEC) THE CONTRACTOR SHALL ADHERE TO THE LATEST EDITION OF NATIONAL ELECTRICAL SAFETY (NESC), AND IF THE CODES ARE IN CONFLICT THEN THE ENGINEER SHALL DETERMINE WHICH CODE IS APPLICABLE AND THE CONTRACTOR SHALL BEAR THE COST FOR THE CORRECTION.
10. ALL SINGLE CONDUCTORS AND CABLES SHALL BE LABLED AND IDENTIFIED PER SPECIFICATIONS.

PS&E SUBMITTAL (11/18/05)
NOT FOR CONSTRUCTION

POWER AND LIGHTING GENERAL NOTES AND ABBREVIATIONS

E0.4

STATE OF CALIFORNIA - DEPARTMENT OF TRANSPORTATION
Caltrans
ELECTRICAL

DESIGN OVERSIGHT
BEHZAD GOLEMOHAMMADI

CALCULATED/DESIGNED BY P. WHOBREY
CHECKED BY M. MAUNG

REVISED BY	DATE	DATE REVISED
	9/30/05	

LAST REVISION 00-00-00
DATE PLOTTED => 09-NOV-2005
TIME PLOTTED => 15:05

RELATIVE BORDER SCALE IS IN MILLIMETERS 0 20 40 60 80

USERNAME => lGraham
DGN FILE => 41123uza004.dgn

CU 04240

EA 1123U1

DIST	COUNTY	ROUTE	KILOMETER POST TOTAL PROJECT	SHEET No	TOTAL SHEETS
04	SM	1			

Min Maung 9/30/05
REGISTERED ELECTRICAL ENGINEER

PLANS APPROVAL DATE

REGISTERED PROFESSIONAL ENGINEER MIN MAUNG No. E012210 Exp. 09/30/06 ELECT STATE OF CALIFORNIA

The State of California or its officers or agents shall not be responsible for the accuracy or completeness of electronic copies of this plan sheet.

HNTB *Corporation*
200 E. SANDPOINTE AVENUE, SUITE 200
SANTA ANA, CALIFORNIA 92707

Caltrans now has a web site! To get to the web site, go to: http://www.dot.ca.gov

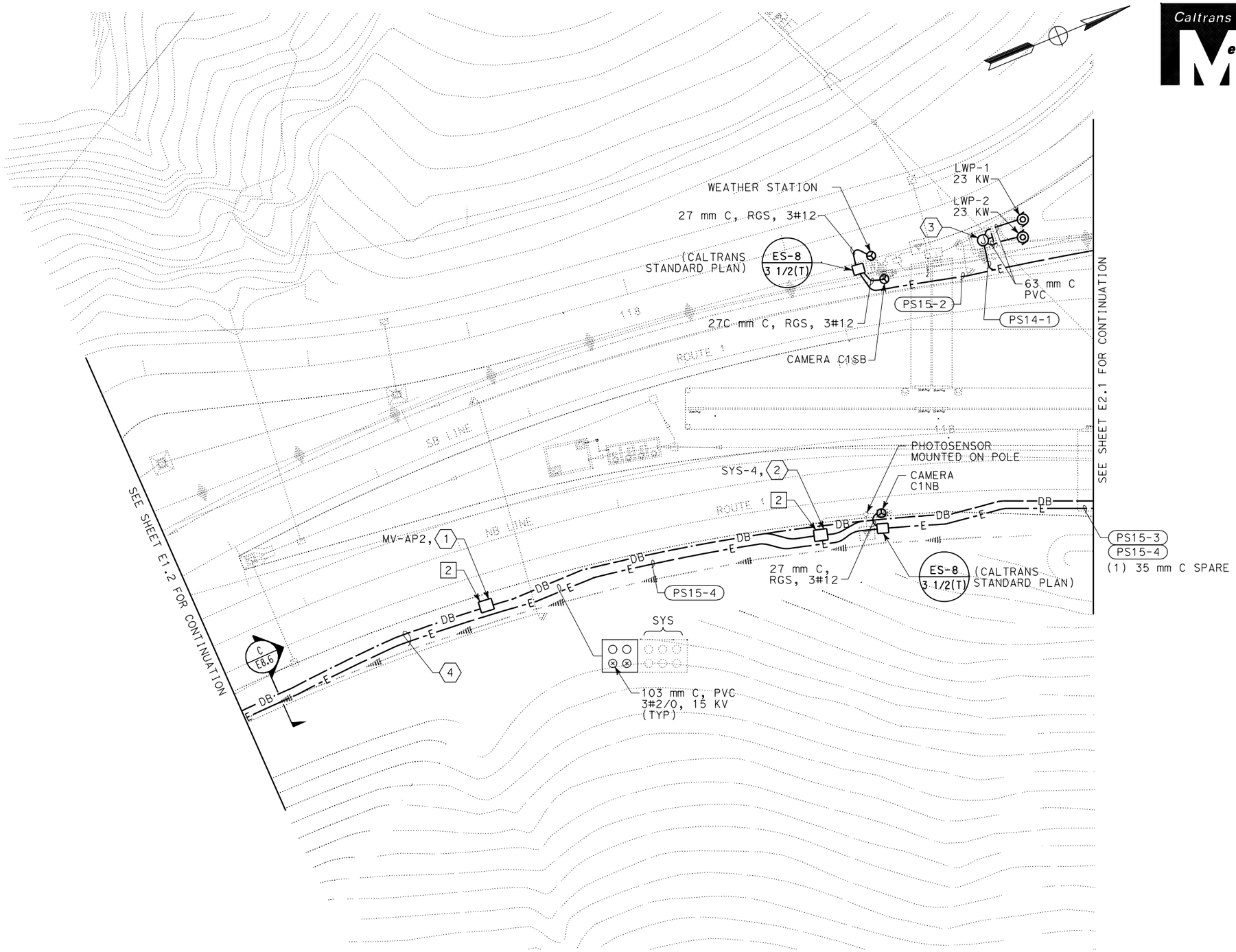

PLAN

SHEET NOTES:

1. MV VAULT AVAILABLE TO CONTRACTOR FOR 15 KV CLASS TEMPORARY POWER FROM PG&E.
2. SYSTEMS CONDUIT CONTINUATION FROM SYS-4 INTO THE TUNNEL IS SHOWN IN THE T SERIES PLANS.
3. NEMA 4X, WALL MOUNTED J-BOX WITH STEEL DIVIDER, 508 mm(L) x 508 mm(W) x 305 mm(D) INSTALLED INSIDE THE LEACH WATER VALVE VAULT. USE SPLIT BOLT CONNECTION WITH TAPE TO SPLICE GROUNDING WIRE. FOR PLAN AND SECTION DETAIL, REFER TO SHEET M7.7.
4. PLACE EMBEDDED CONDUIT ABOVE DUCT BANK, MIN 610 mm UNDER GRADE.

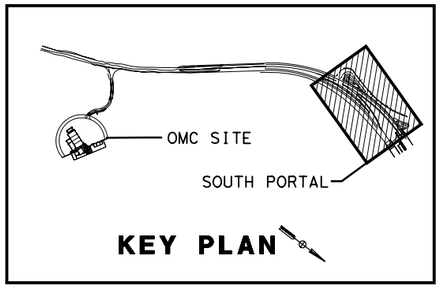

PS&E SUBMITTAL (11/18/05)
NOT FOR CONSTRUCTION

ALL DIMENSIONS ARE IN METERS UNLESS OTHERWISE SHOWN

SOUTH SITE ELECTRICAL UTILITY PLAN NO. 1

SCALE 1:250

E1.1

CALCULATED/DESIGNED BY	P. WHOBREY	DATE 9/30/05
CHECKED BY	M. MAUNG	REVISED BY / DATE REVISED
DESIGN OVERSIGHT	BEHZAD GOLEMOHAMMADI	

STATE OF CALIFORNIA - DEPARTMENT OF TRANSPORTATION
Caltrans
ELECTRICAL

LAST REVISION 00-00-00
DATE PLOTTED => 09-NOV-2005
TIME PLOTTED => 15:05

RELATIVE BORDER SCALE IS IN MILLIMETERS 0 20 40 60 80

USERNAME => lGraham
DGN FILE => 41123uza005.dgn

CU 04240 | EA 1123U1

DIST	COUNTY	ROUTE	KILOMETER POST TOTAL PROJECT	SHEET No	TOTAL SHEETS
04	SM	1			

Min Maung 9/30/05
REGISTERED ELECTRICAL ENGINEER

PLANS APPROVAL DATE

REGISTERED PROFESSIONAL ENGINEER
MIN MAUNG
No. E012210
Exp. 09/30/06
ELECT
STATE OF CALIFORNIA

The State of California or its officers or agents shall not be responsible for the accuracy or completeness of electronic copies of this plan sheet.

HNTB *Corporation*
200 E. SANDPOINTE AVENUE, SUITE 200
SANTA ANA, CALIFORNIA 92707

Caltrans now has a web site! To get to the web site, go to: http://www.dot.ca.gov

Caltrans Metric

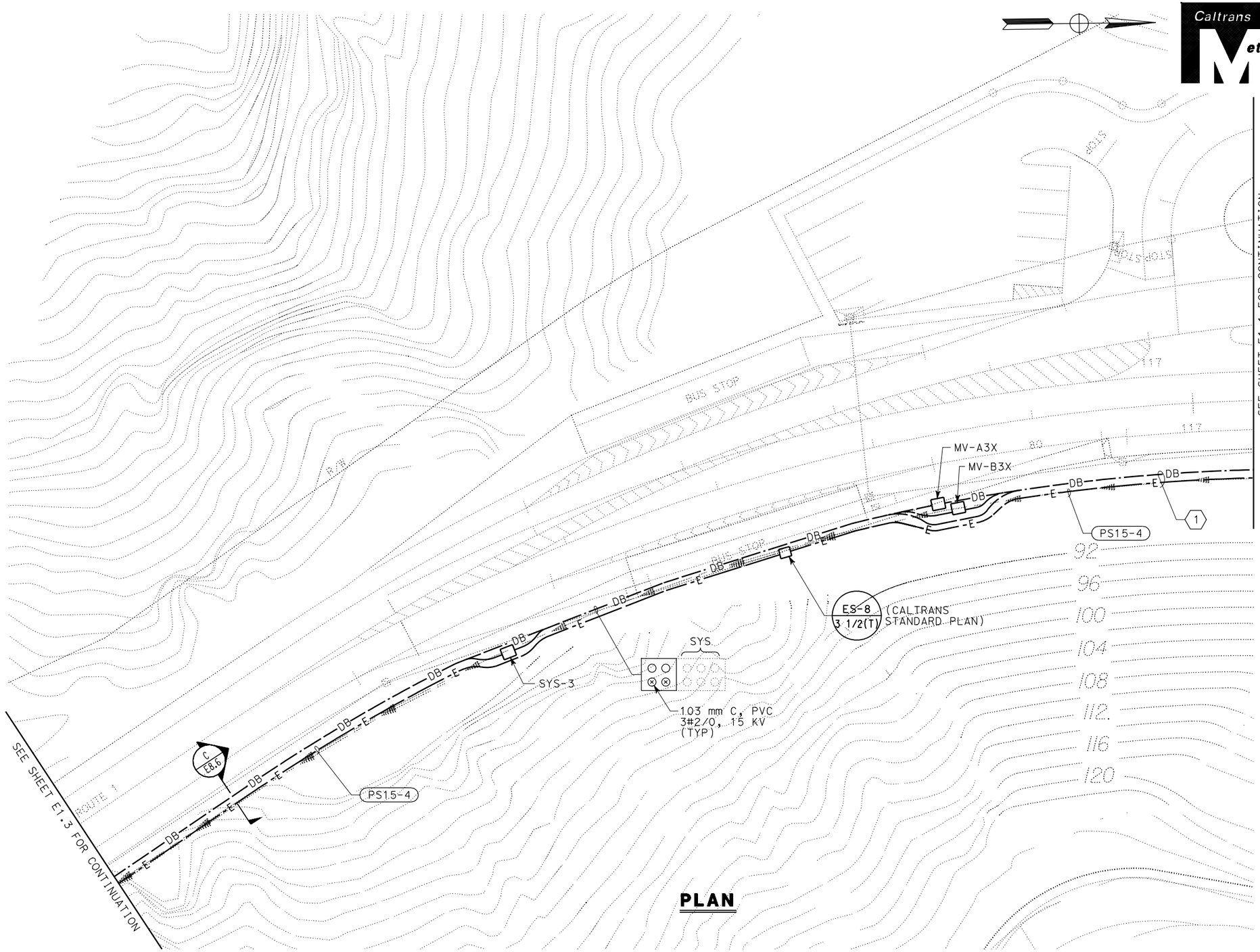

PLAN

SHEET NOTES:

1. PLACE EMBEDDED CONDUIT ABOVE DUCT BANK, MIN 610 mm UNDER GRADE.

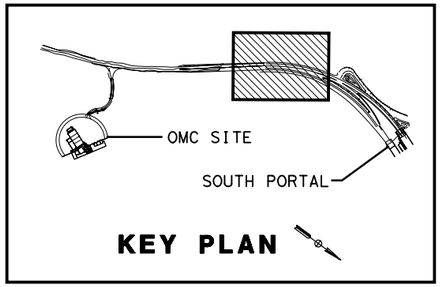

KEY PLAN

ALL DIMENSIONS ARE IN METERS UNLESS OTHERWISE SHOWN

SOUTH SITE ELECTRICAL UTILITY PLAN NO. 2

SCALE 1:250

E1.2

PS&E SUBMITTAL (11/18/05)
NOT FOR CONSTRUCTION

CALCULATED/ DESIGNED BY	P. WHOBREY	DATE	REVISED BY
CHECKED BY	M. MAUNG	9/30/05	DATE REVISED

DESIGN OVERSIGHT
BEHZAD GOLEMOHAMMADI

STATE OF CALIFORNIA - DEPARTMENT OF TRANSPORTATION
Caltrans
ELECTRICAL

LAST REVISION 00-00-00
DATE PLOTTED => 09-NOV-2005
TIME PLOTTED => 15:05

RELATIVE BORDER SCALE IS IN MILLIMETERS 0 20 40 60 80

USERNAME => lGraham
DGN FILE => 41123uza006.dgn

CU 04240

EA 1123U1

DIST	COUNTY	ROUTE	KILOMETER POST TOTAL PROJECT	SHEET No	TOTAL SHEETS
04	SM	1			

Min Maung 9/30/05
REGISTERED ELECTRICAL ENGINEER

PLANS APPROVAL DATE

REGISTERED PROFESSIONAL ENGINEER
MIN MAUNG
No. E012210
Exp. 09/30/06
ELECT
STATE OF CALIFORNIA

The State of California or its officers or agents shall not be responsible for the accuracy or completeness of electronic copies of this plan sheet.

HNTB *Corporation*
200 E. SANDPOINTE AVENUE, SUITE 200
SANTA ANA, CALIFORNIA 92707

Caltrans now has a web site! To get to the web site, go to: http://www.dot.ca.gov

Caltrans Metric

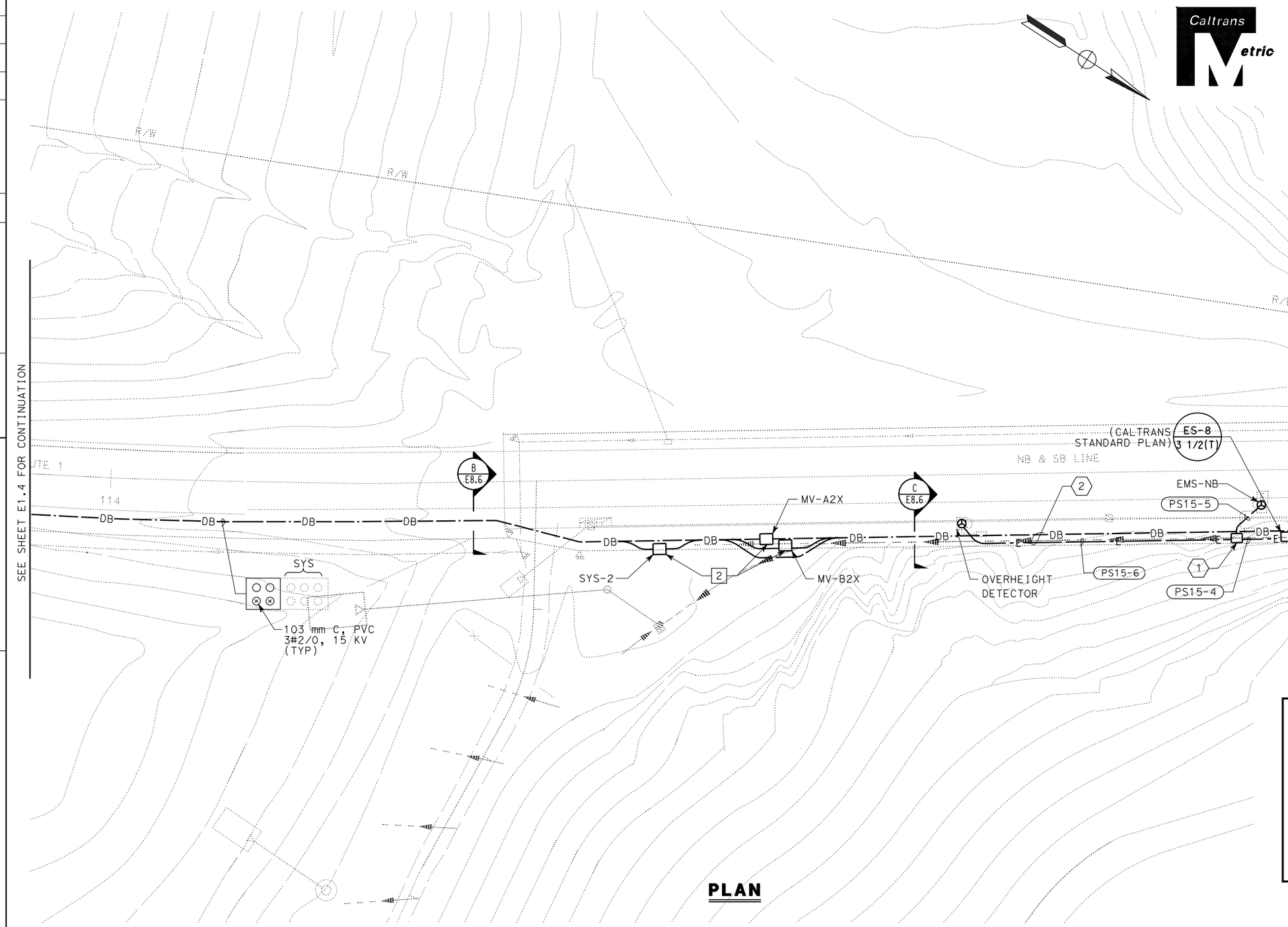

PLAN

SHEET NOTES:

1. PRELIMINARY LOCATION FOR CONTROLLER CABINET.
2. PLACE EMBEDDED CONDUIT ABOVE DUCT BANK, MIN 610 mm UNDER GRADE.

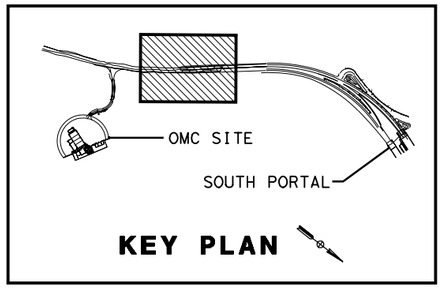

KEY PLAN

ALL DIMENSIONS ARE IN METERS UNLESS OTHERWISE SHOWN

SOUTH SITE ELECTRICAL UTILITY PLAN NO. 3

SCALE 1:250

E1.3

PS&E SUBMITTAL (11/18/05)
NOT FOR CONSTRUCTION

	DATE	REVISED BY	DATE REVISED
CALCULATED/DESIGNED BY	P. WHOBREY		
CHECKED BY	M. MAUNG		

DESIGN OVERSIGHT
BEHZAD GOLEMOHAMMADI

STATE OF CALIFORNIA - DEPARTMENT OF TRANSPORTATION
Caltrans
ELECTRICAL

LAST REVISION 00-00-00
DATE PLOTTED => 09-NOV-2005
TIME PLOTTED => 15:05

RELATIVE BORDER SCALE IS IN MILLIMETERS 0 20 40 60 80

USERNAME => lGraham
DGN FILE => 41123uza007.dgn

CU 04240

EA 1123U1

DIST	COUNTY	ROUTE	KILOMETER POST TOTAL PROJECT	SHEET No	TOTAL SHEETS
04	SM	1			

Min Maung 9/30/05
REGISTERED ELECTRICAL ENGINEER

PLANS APPROVAL DATE

REGISTERED PROFESSIONAL ENGINEER MIN MAUNG No. E012210 Exp. 09/30/06 ELECT STATE OF CALIFORNIA

The State of California or its officers or agents shall not be responsible for the accuracy or completeness of electronic copies of this plan sheet.

HNTB *Corporation*
200 E. SANDPOINTE AVENUE, SUITE 200
SANTA ANA, CALIFORNIA 92707

Caltrans now has a web site! To get to the web site, go to: http://www.dot.ca.gov

Caltrans Metric

NOTES:

1. MV-AP1 TO BE CALTRANS "POINT OF POSSESSION" FOR 12.47KV FROM SOUTH PG&E SERVICE. PROVIDE (1) 4" DUCT CONNECTION TO MV-A1X. GROUNDING EQUIPMENT WILL BE PROVIDED BY PG&E.
2. TELEPHONE "POINT OF POSSESSION". SEE SHEET T1.4.

PLAN

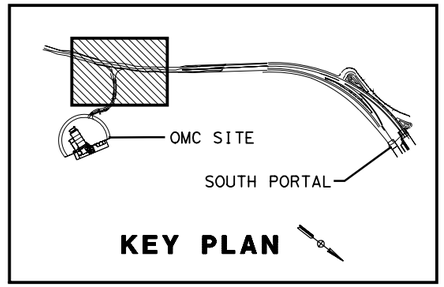

KEY PLAN

ALL DIMENSIONS ARE IN METERS UNLESS OTHERWISE SHOWN

SOUTH SITE ELECTRICAL UTILITY PLAN NO. 4

SCALE 1:250

E1.4

PS&E SUBMITTAL (11/18/05)
NOT FOR CONSTRUCTION

STATE OF CALIFORNIA - DEPARTMENT OF TRANSPORTATION
Caltrans
ELECTRICAL

DESIGN OVERSIGHT
BEHZAD GOLEMOHAMMADI

CALCULATED/DESIGNED BY P. WHOBREY
CHECKED BY M. MAUNG

REVISED BY	DATE REVISED
	9/30/05

LAST REVISION 00-00-00
DATE PLOTTED => 09-NOV-2005
TIME PLOTTED => 15:05

RELATIVE BORDER SCALE IS IN MILLIMETERS 0 20 40 60 80

USERNAME => lGraham
DGN FILE => 41123uza008.dgn

CU 04240

EA 1123U1

DIST	COUNTY	ROUTE	KILOMETER POST TOTAL PROJECT	SHEET No	TOTAL SHEETS
04	SM	1			

Min Maung 9/30/05
REGISTERED ELECTRICAL ENGINEER

PLANS APPROVAL DATE

REGISTERED PROFESSIONAL ENGINEER
MIN MAUNG
No. E012210
Exp. 09/30/06
ELECT
STATE OF CALIFORNIA

The State of California or its officers or agents shall not be responsible for the accuracy or completeness of electronic copies of this plan sheet.

HNTB *Corporation*
200 E. SANDPOINTE AVENUE, SUITE 200
SANTA ANA, CALIFORNIA 92707

Caltrans now has a web site! To get to the web site, go to: http://www.dot.ca.gov

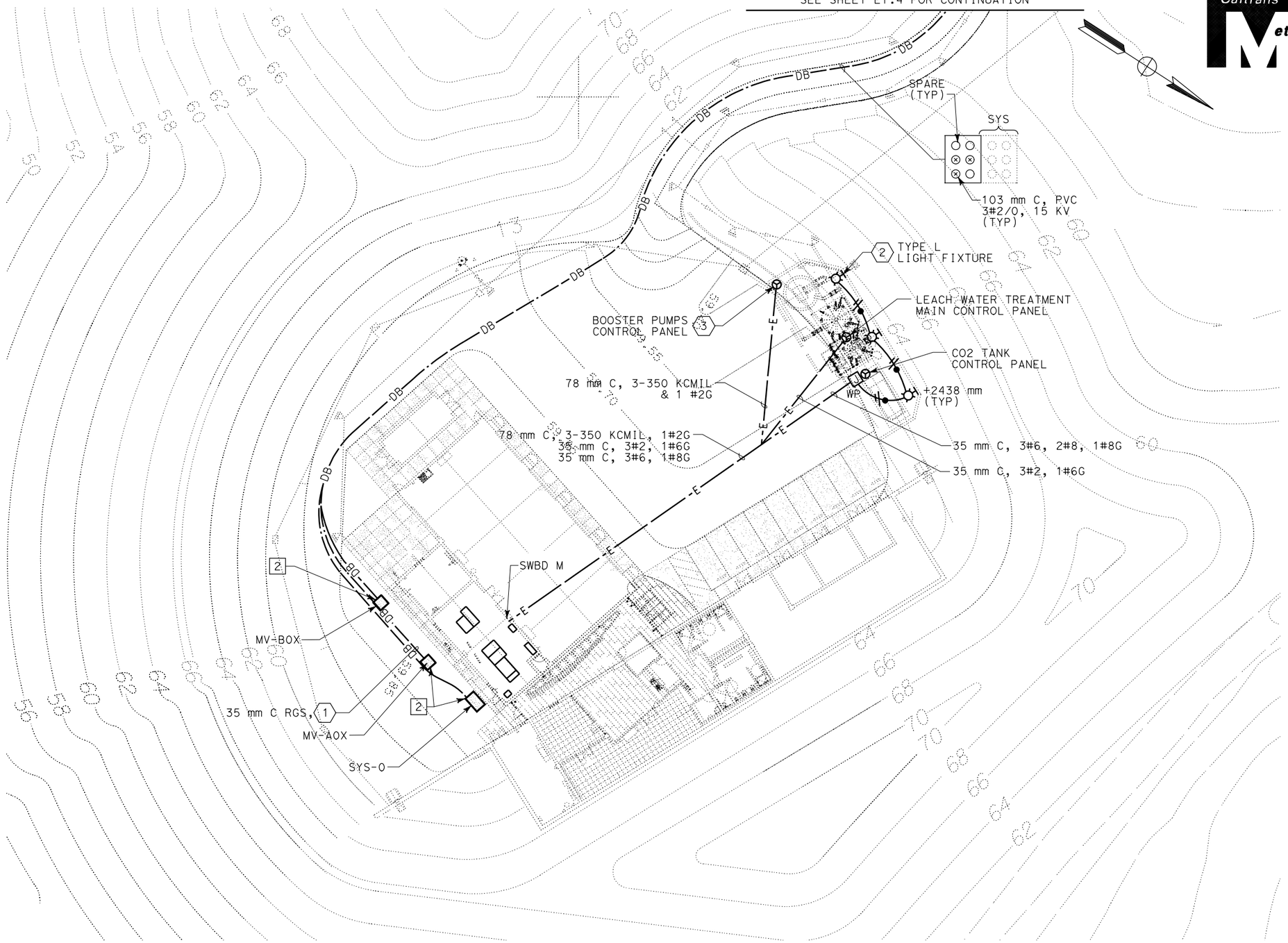

PLAN

SHEET NOTES:

1. SEE SHEET E14.2 FOR CONTINUATION.
2. TYPE L LIGHT FIXTURE SHALL BE WALL MOUNTED. DIE CAST ALUMINUM HOUSING AND DOOR WITH DARK BRONZE ELECTROCOAT PAINT FINISH WITH PRISMATIC BOROSILICATE REFRACTOR LENS. INTEGRAL PHOTOCELL. 277 VOLT, 100 WATTS HIGH PRESSURE SODIUM LAMP.
3. FIELD VERIFY EXACT LOCATION.

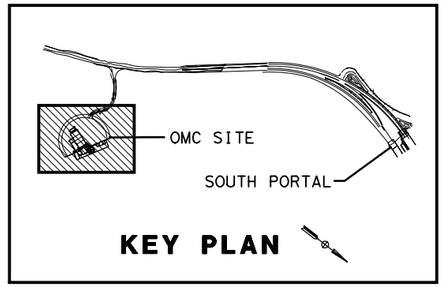

ALL DIMENSIONS ARE IN METERS UNLESS OTHERWISE SHOWN

OMC SITE ELECTRICAL UTILITY PLAN

SCALE 1:250

E1.5

PS&E SUBMITTAL (11/18/05)
NOT FOR CONSTRUCTION

STATE OF CALIFORNIA - DEPARTMENT OF TRANSPORTATION
Caltrans
ELECTRICAL

DESIGN OVERSIGHT: BEHZAD GOLEMOHAMMADI
CALCULATED/DESIGNED BY: P. WHOBREY
CHECKED BY: M. MAUNG
DATE REVISED BY: 9/30/05
DATE REVISED

LAST REVISION 00-00-00
DATE PLOTTED => 09-NOV-2005
TIME PLOTTED => 15:05

RELATIVE BORDER SCALE IS IN MILLIMETERS 0 20 40 60 80

USERNAME => lGraham
DGN FILE => 41123uza009.dgn

CU 04240
EA 1123U1

DIST	COUNTY	ROUTE	KILOMETER POST TOTAL PROJECT	SHEET No	TOTAL SHEETS
04	SM	1			

Min Maung 9/30/05
REGISTERED ELECTRICAL ENGINEER

PLANS APPROVAL DATE

REGISTERED PROFESSIONAL ENGINEER
MIN MAUNG
No. E012210
Exp. 09/30/06
ELECT
STATE OF CALIFORNIA

The State of California or its officers or agents shall not be responsible for the accuracy or completeness of electronic copies of this plan sheet.

HNTB *Corporation*
200 E. SANDPOINTE AVENUE, SUITE 200
SANTA ANA, CALIFORNIA 92707

Caltrans now has a web site! To get to the web site, go to: http://www.dot.ca.gov

Caltrans Metric

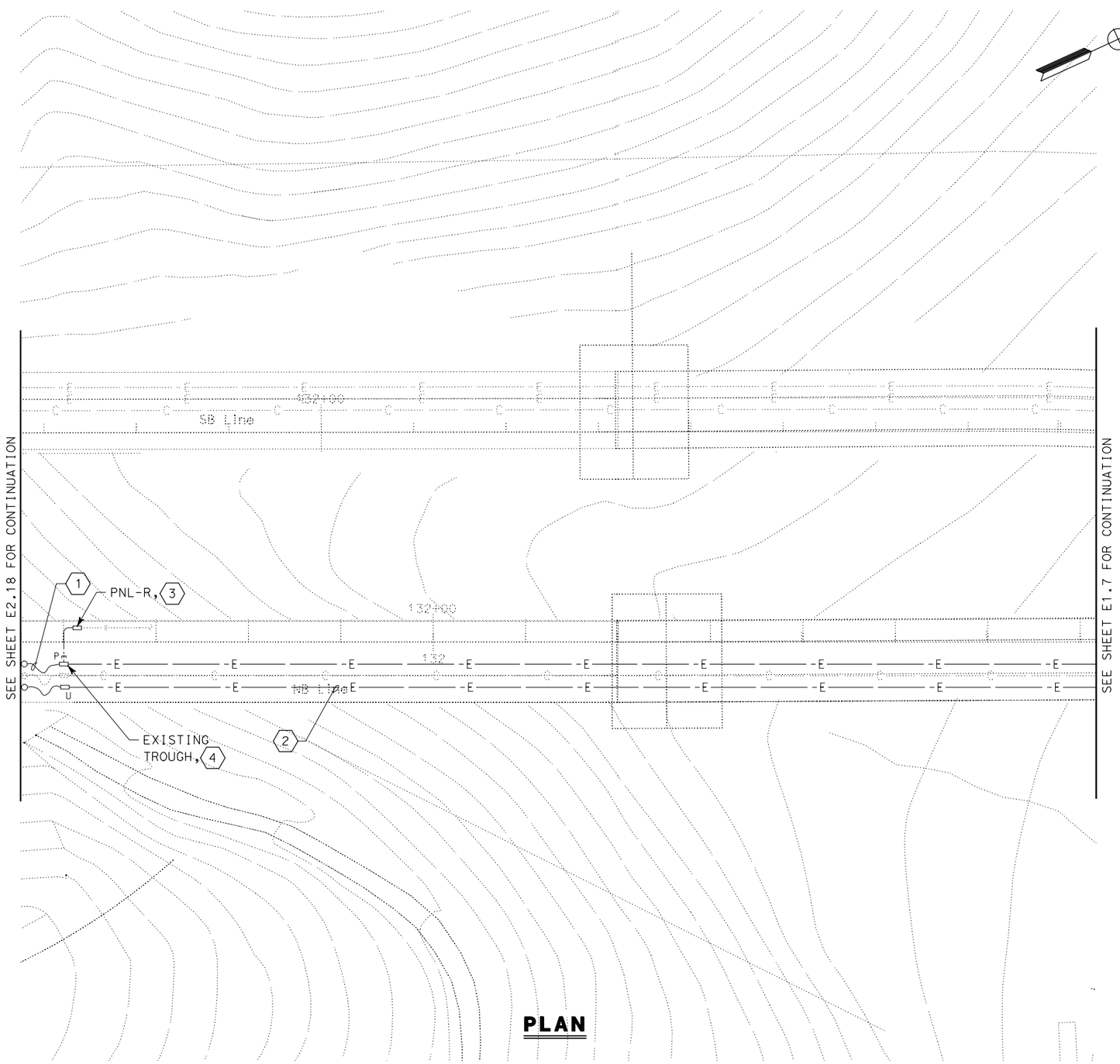

PLAN

SHEET NOTES:

1. PULL IN WIRES INTO EXISTING CONDUIT UP TO THE FOLLOWING EQUIPMENTS.

   a) 3 #8 + #8 GROUND TO CONTROLLER CABINET

   b) 3 #1 + #6 GROUND TO PNL-R

   c) 4 #10 + #10 GROUND TO NORTH SITE LIGHTING.

   INCLUDE ONLY THE LARGEST GROUND CONDUCTOR IN A CONDUIT.

2. PULL IN 3 #2/0, 15 KV INTO EXISTING CONDUIT UP TO PG&E VAULT.

3. PANELBOARD R SUPPLIED BY OTHERS. FEEDER WIRES AND ITS TERMINATION UNDER ELECTRICAL SPECIFICATIONS.

4. TAPE BRIDGE LIGHTING WIRES (4#10) INSIDE EXISTING TROUGH FOR FUTURE CONNECTION.

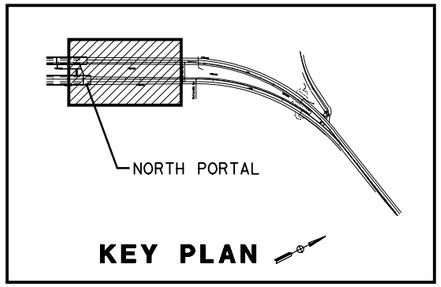

KEY PLAN

ALL DIMENSIONS ARE IN METERS UNLESS OTHERWISE SHOWN

NORTH SITE ELECTRICAL UTILITY PLAN NO. 1

SCALE 1:250

E1.6

PS&E SUBMITTAL (11/18/05)
NOT FOR CONSTRUCTION

CALCULATED/DESIGNED BY	P. WHOBREY	DATE
CHECKED BY	M. MAUNG	9/30/05

REVISED BY | DATE REVISED

DESIGN OVERSIGHT
BEHZAD GOLEMOHAMMADI

STATE OF CALIFORNIA - DEPARTMENT OF TRANSPORTATION
Caltrans
ELECTRICAL

LAST REVISION 00-00-00 | DATE PLOTTED => 09-NOV-2005 | TIME PLOTTED => 15:05

RELATIVE BORDER SCALE IS IN MILLIMETERS 0 20 40 60 80

USERNAME => lGraham
DGN FILE => 41123uza010.dgn

CU 04240 | EA 1123U1

DIST	COUNTY	ROUTE	KILOMETER POST TOTAL PROJECT	SHEET No	TOTAL SHEETS
04	SM	1			

Min Maung 9/30/05
REGISTERED ELECTRICAL ENGINEER

PLANS APPROVAL DATE

REGISTERED PROFESSIONAL ENGINEER
MIN MAUNG
No. E012210
Exp. 09/30/06
ELECT
STATE OF CALIFORNIA

The State of California or its officers or agents shall not be responsible for the accuracy or completeness of electronic copies of this plan sheet.

HNTB *Corporation*
200 E. SANDPOINTE AVENUE, SUITE 200
SANTA ANA, CALIFORNIA 92707

Caltrans now has a web site! To get to the web site, go to: http://www.dot.ca.gov

Caltrans Metric

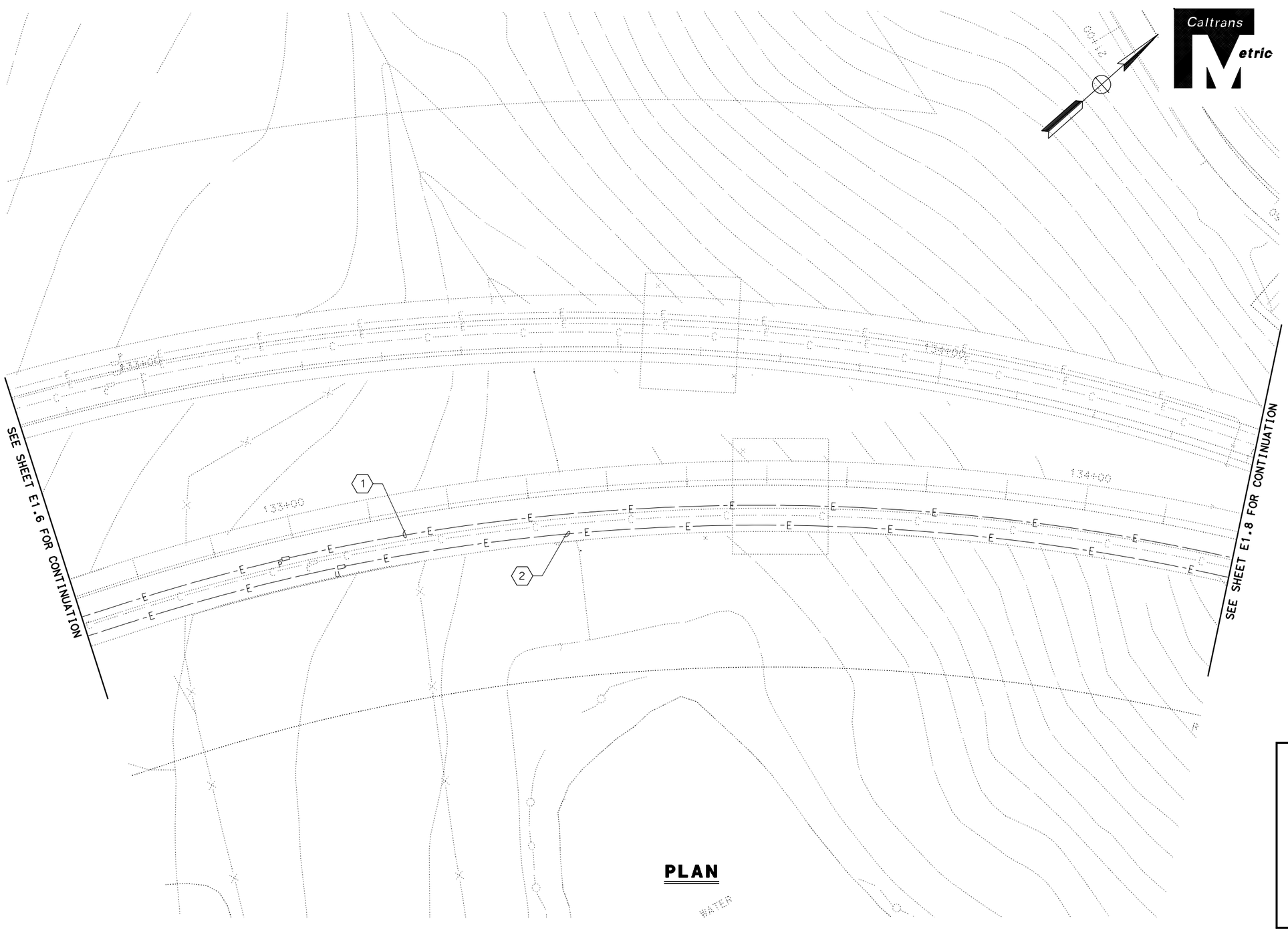

PLAN

SHEET NOTES:

1. PULL IN 4 #8 WIRES INTO EXISTING CONDUIT UP TO CONTROLLER CABINET.
2. PULL IN 3 #2/0, 15 KV INTO EXISTING CONDUIT UP TO PG&E VAULT.

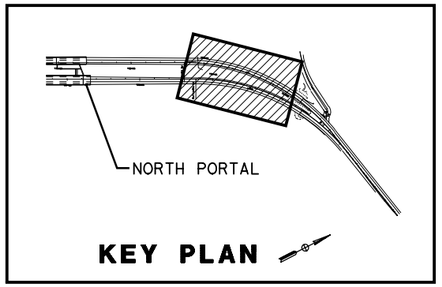

KEY PLAN

ALL DIMENSIONS ARE IN METERS UNLESS OTHERWISE SHOWN

NORTH SITE ELECTRICAL UTILITY PLAN NO. 2

SCALE 1:250

E1.7

PS&E SUBMITTAL (11/18/05)
NOT FOR CONSTRUCTION

CALCULATED/DESIGNED BY	P. WHOBREY	DATE
CHECKED BY	M. MAUNG	9/30/05

REVISED BY — DATE REVISED

DESIGN OVERSIGHT
BEHZAD GOLEMOHAMMADI

STATE OF CALIFORNIA - DEPARTMENT OF TRANSPORTATION
Caltrans
ELECTRICAL

RELATIVE BORDER SCALE IS IN MILLIMETERS 0 20 40 60 80

USERNAME => lGraham
DGN FILE => 41123uza011.dgn

CU 04240 | EA 1123U1

LAST REVISION 00-00-00
DATE PLOTTED => 09-NOV-2005
TIME PLOTTED => 15:05

DIST	COUNTY	ROUTE	KILOMETER POST TOTAL PROJECT	SHEET No	TOTAL SHEETS
04	SM	1			

Min Maung 9/30/05
REGISTERED ELECTRICAL ENGINEER

PLANS APPROVAL DATE

REGISTERED PROFESSIONAL ENGINEER MIN MAUNG No. E012210 Exp. 09/30/06 ELECT STATE OF CALIFORNIA

The State of California or its officers or agents shall not be responsible for the accuracy or completeness of electronic copies of this plan sheet.

HNTB *Corporation*
200 E. SANDPOINTE AVENUE, SUITE 200
SANTA ANA, CALIFORNIA 92707

Caltrans now has a web site! To get to the web site, go to: http://www.dot.ca.gov

Caltrans Metric

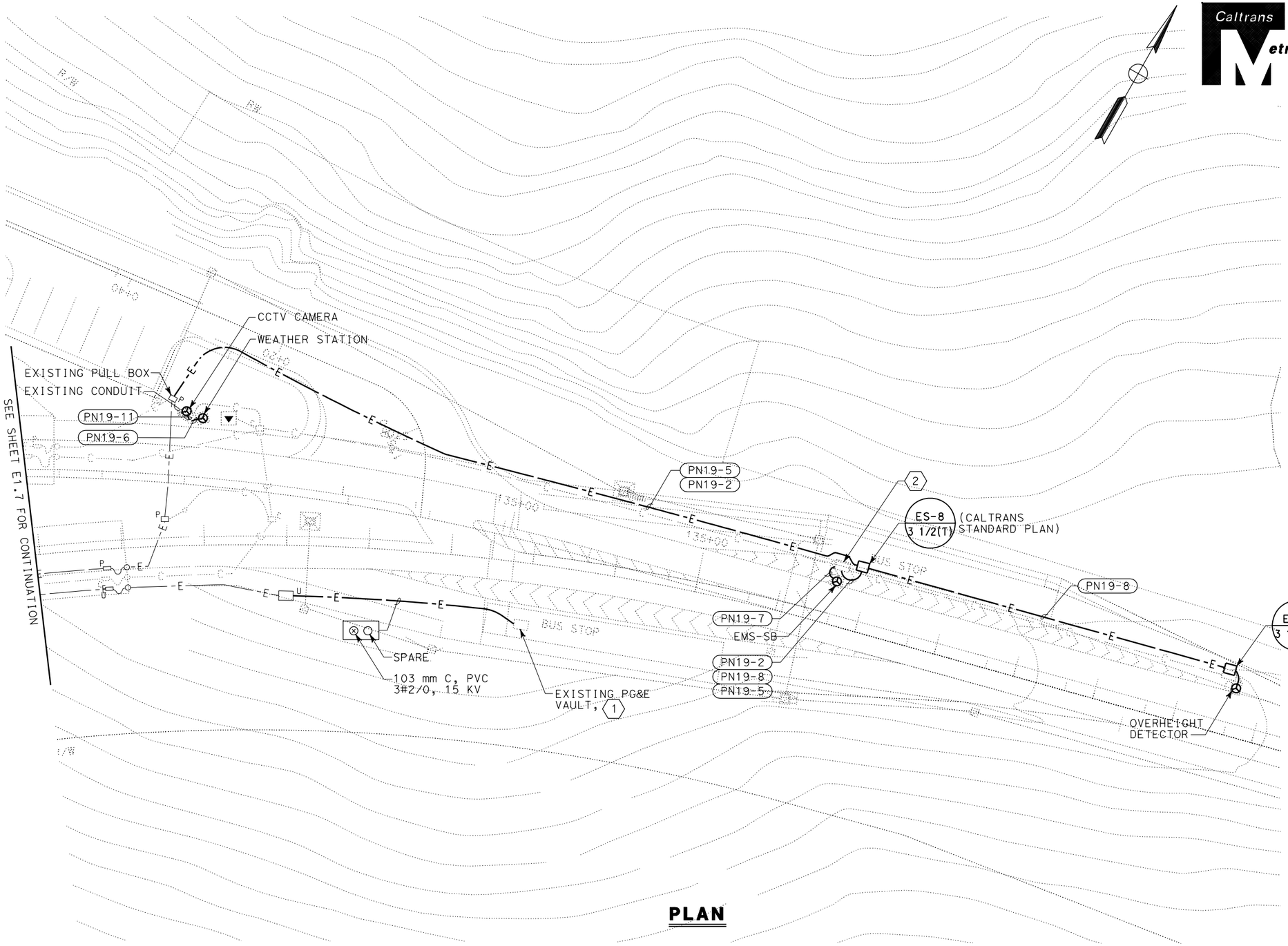

PLAN

SHEET NOTES:

1. CALTRANS "POINT OF POSSESSION" FROM PG&E NORTH UTILITY
2. PRELIMINARY LOCATION FOR CONTROLLER CABINET.

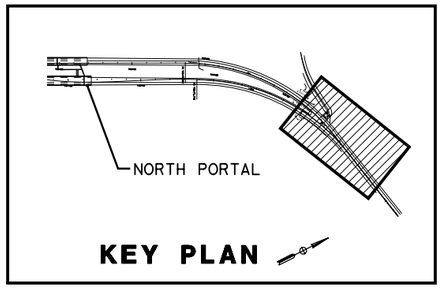

KEY PLAN

ALL DIMENSIONS ARE IN METERS UNLESS OTHERWISE SHOWN

NORTH SITE ELECTRICAL UTILITY PLAN NO. 3

SCALE 1:250

E1.8

PS&E SUBMITTAL (11/18/05)
NOT FOR CONSTRUCTION

	DATE	REVISED BY	DATE REVISED
CALCULATED/DESIGNED BY	P. WHOBREY		
CHECKED BY	M. MAUNG		9/30/05

DESIGN OVERSIGHT
BEHZAD GOLEMOHAMMADI

STATE OF CALIFORNIA - DEPARTMENT OF TRANSPORTATION
Caltrans
ELECTRICAL

LAST REVISION 00-00-00
DATE PLOTTED => 09-NOV-2005
TIME PLOTTED => 15:05

RELATIVE BORDER SCALE IS IN MILLIMETERS 0 20 40 60 80

USERNAME => lGraham
DGN FILE => 41123uza012.dgn

CU 04240

EA 1123U1

DIST	COUNTY	ROUTE	KILOMETER POST TOTAL PROJECT	SHEET No	TOTAL SHEETS
04	SM	1			

Min Maung 9/30/05
REGISTERED ELECTRICAL ENGINEER

PLANS APPROVAL DATE

REGISTERED PROFESSIONAL ENGINEER MIN MAUNG No. E012210 Exp. 09/30/06 ELECT STATE OF CALIFORNIA

The State of California or its officers or agents shall not be responsible for the accuracy or completeness of electronic copies of this plan sheet.

HNTB *Corporation*
200 E. SANDPOINTE AVENUE, SUITE 200
SANTA ANA, CALIFORNIA 92707

Caltrans now has a web site! To get to the web site, go to: http://www.dot.ca.gov

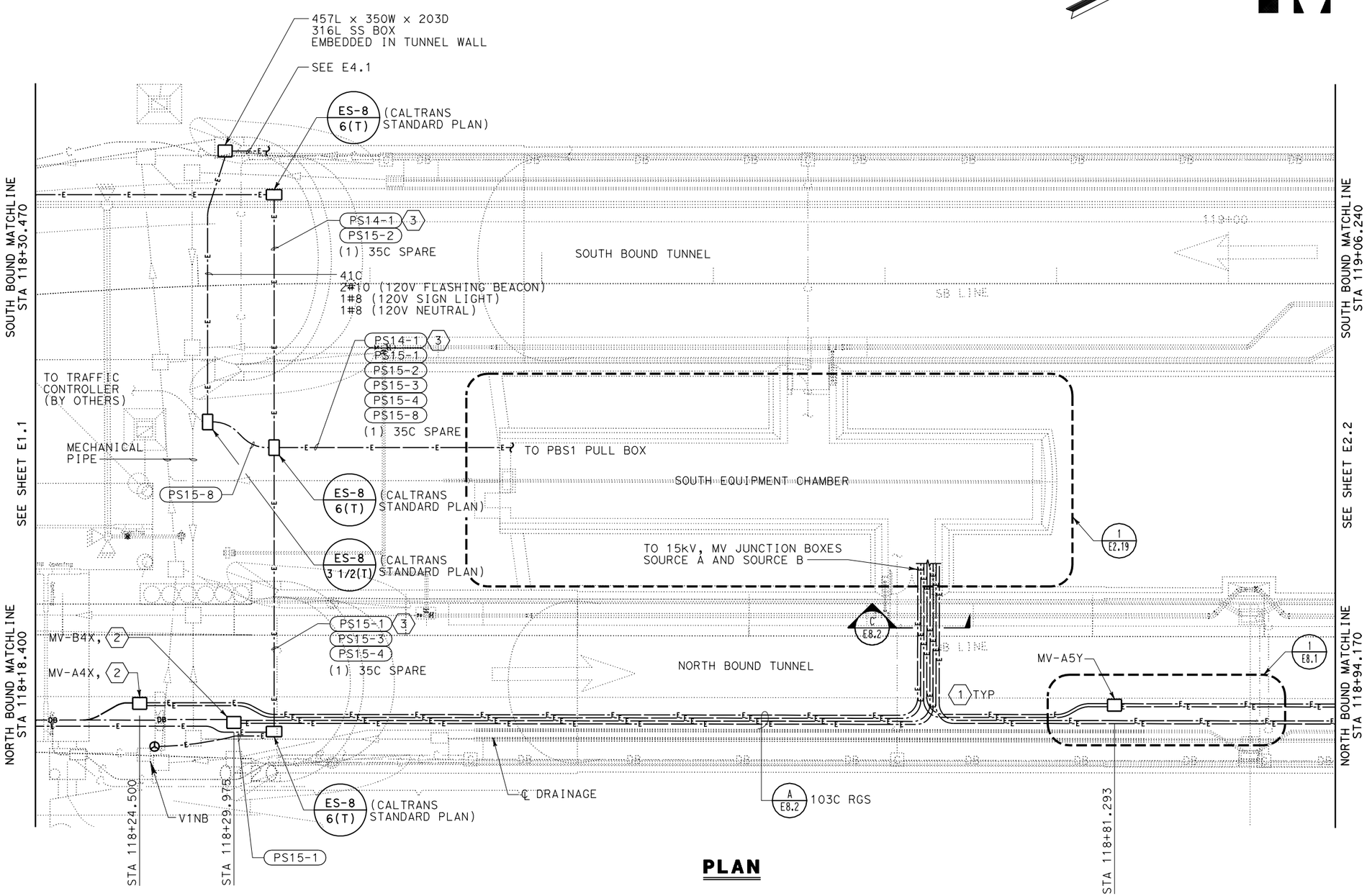

PLAN

SHEET NOTES:

1. ALL HORIZONTAL DUCT BENDS SHALL BE 1219 DEGREE RADIUS. ALL VERTICAL BENDS AT EQUIPMENT SHALL BE 610 DEGREE RADIUS, UNLESS NOTED OTHERWISE. FOR COORDINATION WITH STRUCTURAL, SEE SHEETS S1.24 THRU S1.26.
2. CONDUIT TRANSITIONS FROM STEEL TO PVC OUTSIDE THE TUNNEL. SEE SHEET E8.1 FOR GROUND WIRE CONNECTION DETAILS OF STEEL AND PVC CONDUIT.
3. CONDUITS ARRANGED HORIZONTALLY EVERY 100 OC, TYPICAL DEPTH AT 610. COORDINATE DEPTH AT CROSSING WITH THE MECHANICAL PIPE.

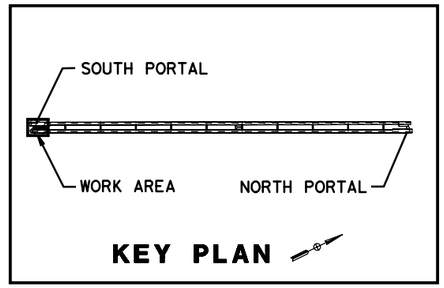

KEY PLAN

ALL DIMENSIONS ARE IN MILLIMETERS UNLESS OTHERWISE SHOWN

TUNNEL UTILITY AND GROUNDING PLAN NO. 1

SCALE 1:125

E2.1

PS&E SUBMITTAL (11/18/05)
NOT FOR CONSTRUCTION

	DATE	REVISED BY	DATE REVISED
CALCULATED/DESIGNED BY	P. WHOBREY		
CHECKED BY	M. MAUNG		9/30/05

DESIGN OVERSIGHT: BEHZAD GOLEMOHAMMADI

STATE OF CALIFORNIA - DEPARTMENT OF TRANSPORTATION
Caltrans
ELECTRICAL

LAST REVISION 00-00-00 | DATE PLOTTED => 09-NOV-2005 TIME PLOTTED => 15:05

RELATIVE BORDER SCALE IS IN MILLIMETERS 0 20 40 60 80

USERNAME => lGraham
DGN FILE => 41123uza013.dgn

CU 04240 | EA 1123U1

DIST	COUNTY	ROUTE	KILOMETER POST TOTAL PROJECT	SHEET No	TOTAL SHEETS
04	SM	1			

Min Maung 9/30/05
REGISTERED ELECTRICAL ENGINEER

PLANS APPROVAL DATE

REGISTERED PROFESSIONAL ENGINEER
MIN MAUNG
No. E012210
Exp. 09/30/06
ELECT
STATE OF CALIFORNIA

The State of California or its officers or agents shall not be responsible for the accuracy or completeness of electronic copies of this plan sheet.

HNTB *Corporation*
200 E. SANDPOINTE AVENUE, SUITE 200
SANTA ANA, CALIFORNIA 92707

Caltrans now has a web site! To get to the web site, go to: http://www.dot.ca.gov

Caltrans Metric

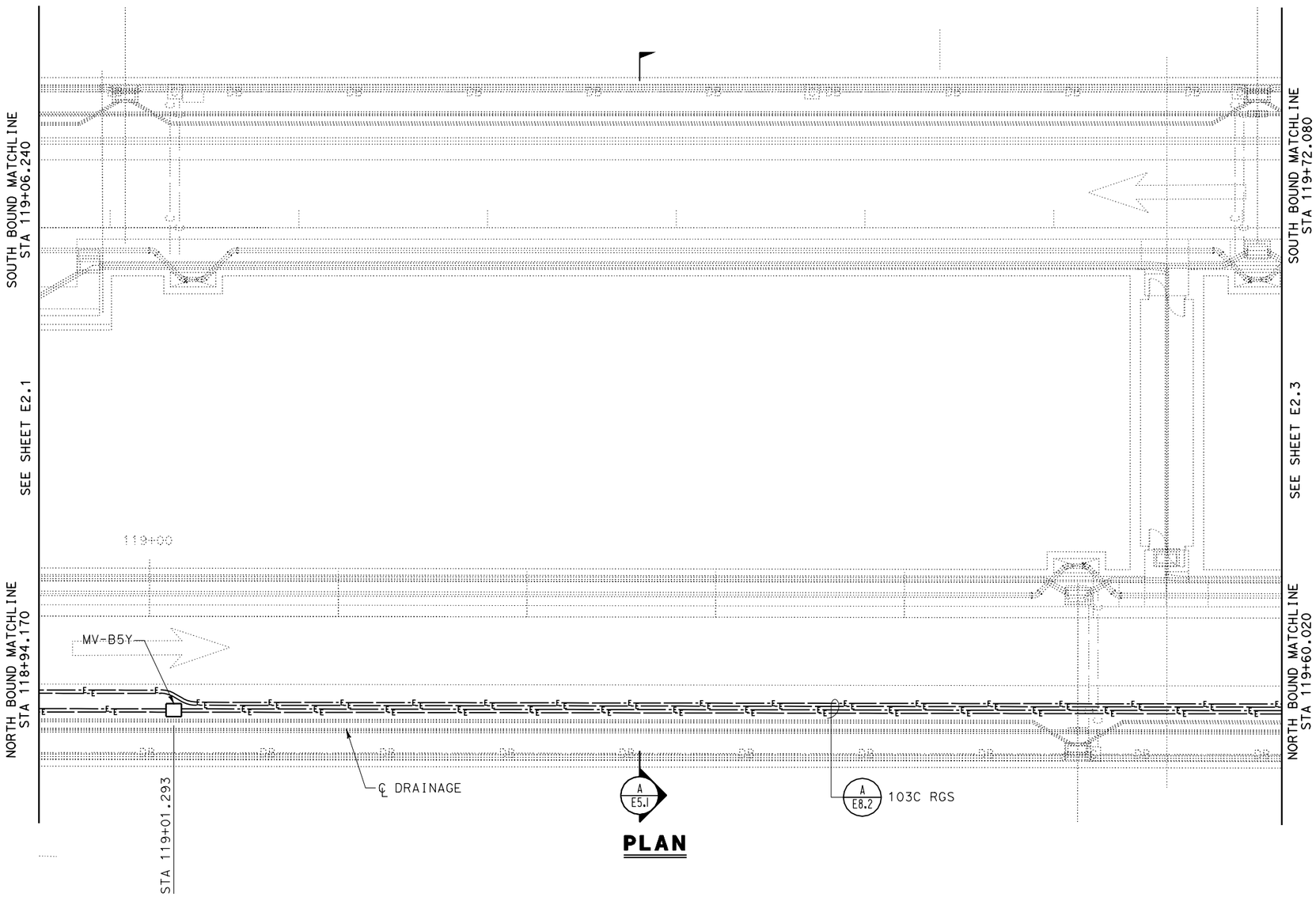

PLAN

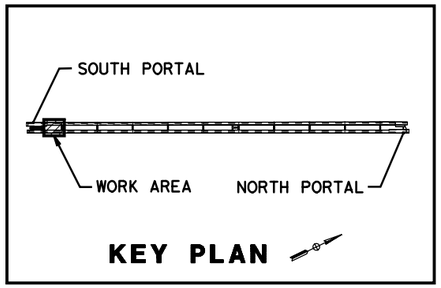

KEY PLAN

ALL DIMENSIONS ARE IN MILLIMETERS UNLESS OTHERWISE SHOWN

TUNNEL UTILITY AND GROUNDING PLAN NO. 2

SCALE 1:125

E2.2

PS&E SUBMITTAL (11/18/05)
NOT FOR CONSTRUCTION

STATE OF CALIFORNIA - DEPARTMENT OF TRANSPORTATION
Caltrans
ELECTRICAL

DESIGN OVERSIGHT
BEHZAD GOLEMOHAMMADI

CALCULATED/DESIGNED BY P. WHOBREY
CHECKED BY M. MAUNG

REVISED BY	DATE	DATE REVISED

LAST REVISION 00-00-00
DATE PLOTTED => 09-NOV-2005
TIME PLOTTED => 15:05

RELATIVE BORDER SCALE IS IN MILLIMETERS 0 20 40 60 80

USERNAME => lGraham
DGN FILE => 41123uza014.dgn

CU 04240

EA 1123U1

DIST	COUNTY	ROUTE	KILOMETER POST TOTAL PROJECT	SHEET No	TOTAL SHEETS
04	SM	1			

Min Maung 9/30/05
REGISTERED ELECTRICAL ENGINEER

PLANS APPROVAL DATE

REGISTERED PROFESSIONAL ENGINEER
MIN MAUNG
No. E012210
Exp. 09/30/06
ELECT
STATE OF CALIFORNIA

The State of California or its officers or agents shall not be responsible for the accuracy or completeness of electronic copies of this plan sheet.

HNTB *Corporation*
200 E. SANDPOINTE AVENUE, SUITE 200
SANTA ANA, CALIFORNIA 92707

Caltrans now has a web site! To get to the web site, go to: http://www.dot.ca.gov

Caltrans Metric

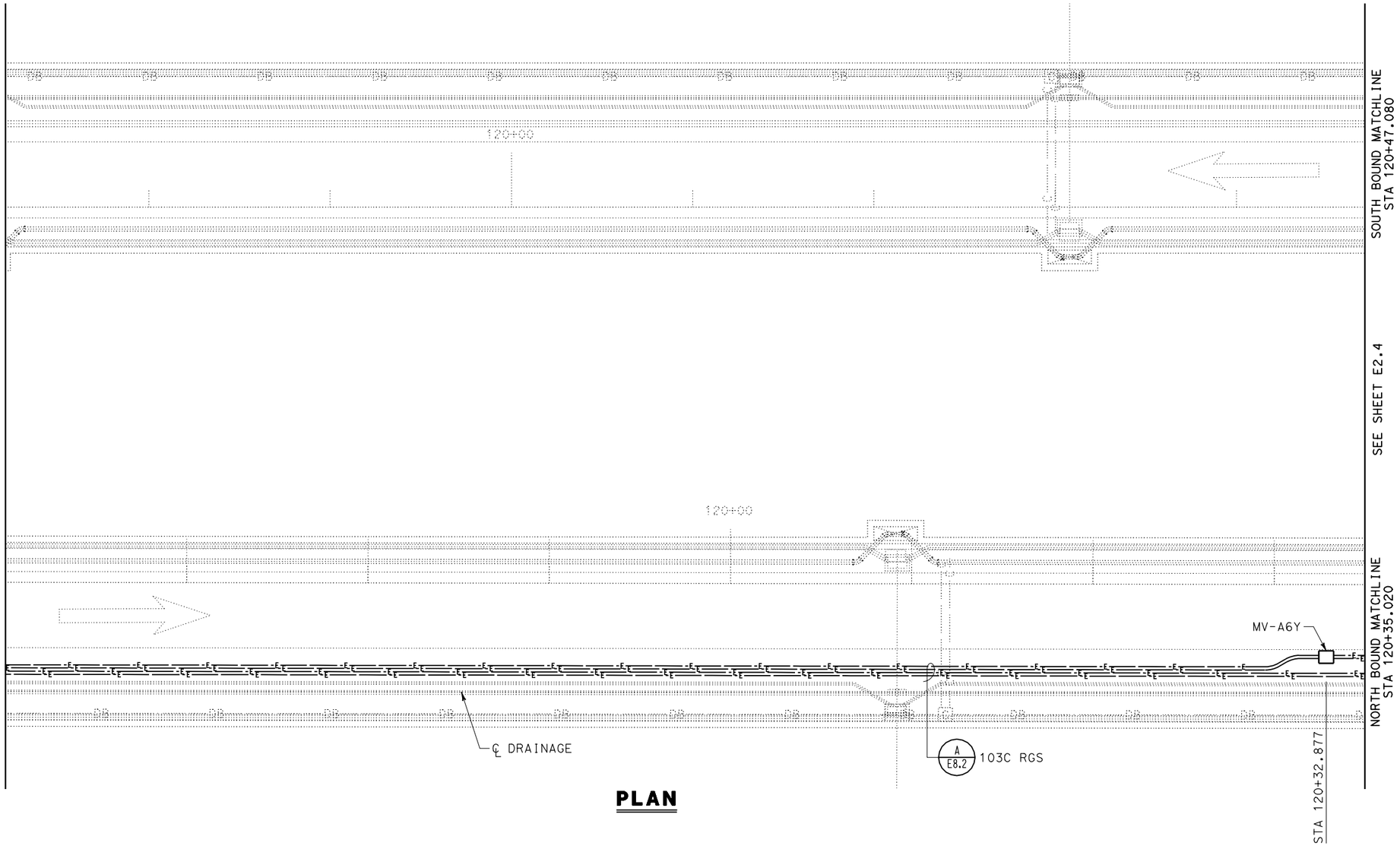

PLAN

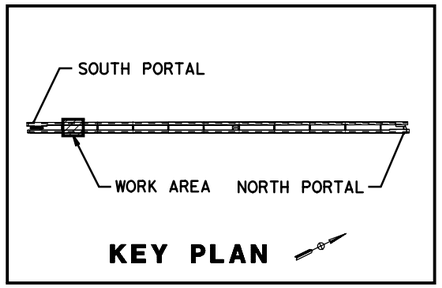

KEY PLAN

ALL DIMENSIONS ARE IN MILLIMETERS UNLESS OTHERWISE SHOWN

TUNNEL UTILITY AND GROUNDING PLAN NO. 3

SCALE 1:125

E2.3

PS&E SUBMITTAL (11/18/05)
NOT FOR CONSTRUCTION

STATE OF CALIFORNIA - DEPARTMENT OF TRANSPORTATION
Caltrans **ELECTRICAL**

DESIGN OVERSIGHT: BEHZAD GOLEMOHAMMADI

CALCULATED/DESIGNED BY: P. WHOBREY
CHECKED BY: M. MAUNG

REVISED BY	DATE	DATE REVISED
	9/30/05	

LAST REVISION 00-00-00
DATE PLOTTED => 09-NOV-2005
TIME PLOTTED => 15:05

RELATIVE BORDER SCALE IS IN MILLIMETERS 0 20 40 60 80

USERNAME => lGraham
DGN FILE => 41123uza015.dgn

CU 04240
EA 1123U1

DIST	COUNTY	ROUTE	KILOMETER POST TOTAL PROJECT	SHEET No	TOTAL SHEETS
04	SM	1			

Min Maung 9/30/05
REGISTERED ELECTRICAL ENGINEER

PLANS APPROVAL DATE

REGISTERED PROFESSIONAL ENGINEER
MIN MAUNG
No. E012210
Exp. 09/30/06
ELECT
STATE OF CALIFORNIA

The State of California or its officers or agents shall not be responsible for the accuracy or completeness of electronic copies of this plan sheet.

HNTB *Corporation*
200 E. SANDPOINTE AVENUE, SUITE 200
SANTA ANA, CALIFORNIA 92707

Caltrans now has a web site! To get to the web site, go to: http://www.dot.ca.gov

Caltrans Metric

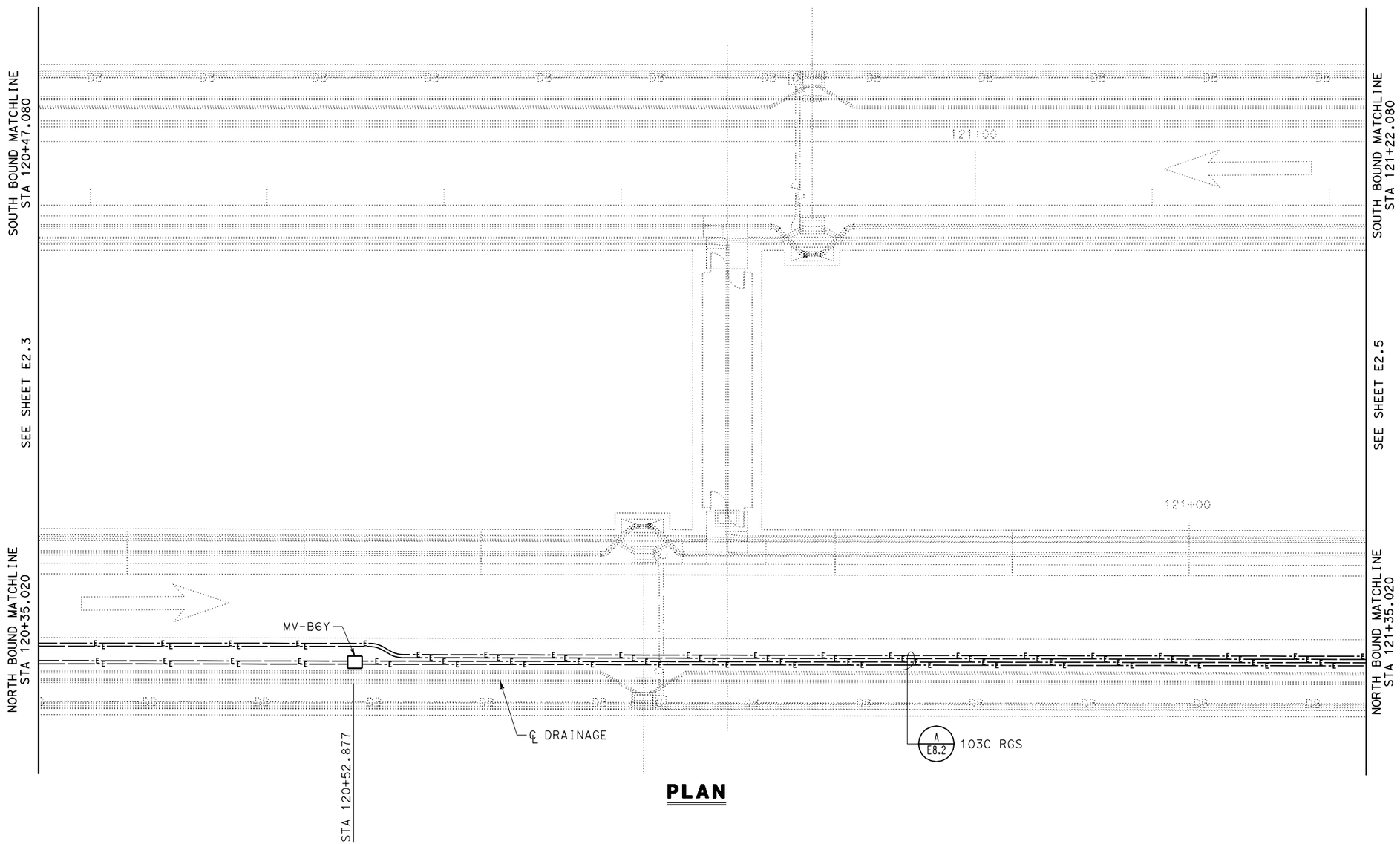

PLAN

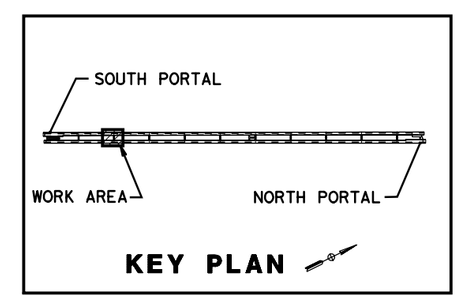

KEY PLAN

ALL DIMENSIONS ARE IN MILLIMETERS UNLESS OTHERWISE SHOWN

TUNNEL UTILITY AND GROUNDING PLAN NO. 4

SCALE 1:125

E2.4

PS&E SUBMITTAL (11/18/05)
NOT FOR CONSTRUCTION

STATE OF CALIFORNIA - DEPARTMENT OF TRANSPORTATION
Caltrans
ELECTRICAL

DESIGN OVERSIGHT: BEHZAD GOLEMOHAMMADI

CALCULATED/DESIGNED BY: P. WHOBREY
CHECKED BY: M. MAUNG

DATE REVISED BY	DATE REVISED
9/30/05	

LAST REVISION 00-00-00
DATE PLOTTED => 09-NOV-2005
TIME PLOTTED => 15:05

RELATIVE BORDER SCALE IS IN MILLIMETERS 0 20 40 60 80

USERNAME => lGraham
DGN FILE => 41123uza016.dgn

CU 04240

EA 1123U1

DIST	COUNTY	ROUTE	KILOMETER POST TOTAL PROJECT	SHEET No	TOTAL SHEETS
04	SM	1			

Min Maung 9/30/05
REGISTERED ELECTRICAL ENGINEER

PLANS APPROVAL DATE

REGISTERED PROFESSIONAL ENGINEER
MIN MAUNG
No. E012210
Exp. 09/30/06
ELECT
STATE OF CALIFORNIA

The State of California or its officers or agents shall not be responsible for the accuracy or completeness of electronic copies of this plan sheet.

HNTB *Corporation*
200 E. SANDPOINTE AVENUE, SUITE 200
SANTA ANA, CALIFORNIA 92707

Caltrans now has a web site! To get to the web site, go to: http://www.dot.ca.gov

Caltrans Metric

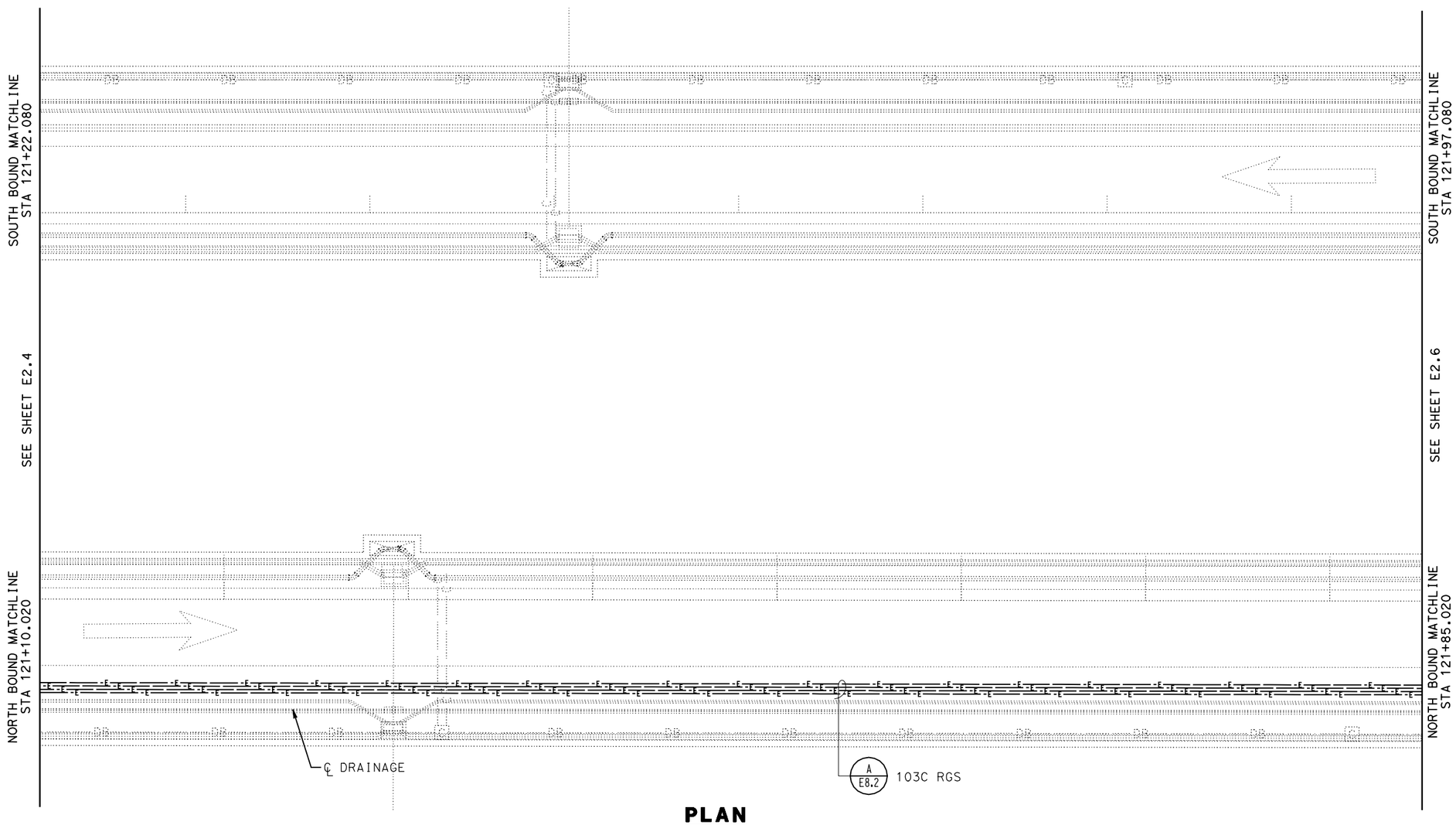

PLAN

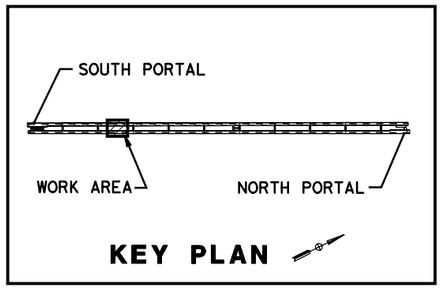

KEY PLAN

ALL DIMENSIONS ARE IN MILLIMETERS UNLESS OTHERWISE SHOWN

TUNNEL UTILITY AND GROUNDING PLAN NO. 5

SCALE 1:125

E2.5

PS&E SUBMITTAL (11/18/05)
NOT FOR CONSTRUCTION

STATE OF CALIFORNIA - DEPARTMENT OF TRANSPORTATION
Caltrans
ELECTRICAL

DESIGN OVERSIGHT: BEHZAD GOLEMOHAMMADI

CALCULATED/DESIGNED BY: P. WHOBREY
CHECKED BY: M. MAUNG

REVISED BY	DATE	DATE REVISED
	9/30/05	

LAST REVISION 00-00-00
DATE PLOTTED => 09-NOV-2005
TIME PLOTTED => 15:05

RELATIVE BORDER SCALE IS IN MILLIMETERS 0 20 40 60 80

USERNAME => lGraham
DGN FILE => 41123uza017.dgn

CU 04240

EA 1123U1

DIST	COUNTY	ROUTE	KILOMETER POST TOTAL PROJECT	SHEET No	TOTAL SHEETS
04	SM	1			

Min Maung 9/30/05
REGISTERED ELECTRICAL ENGINEER

PLANS APPROVAL DATE

REGISTERED PROFESSIONAL ENGINEER
MIN MAUNG
No. E012210
Exp. 09/30/06
ELECT
STATE OF CALIFORNIA

The State of California or its officers or agents shall not be responsible for the accuracy or completeness of electronic copies of this plan sheet.

HNTB *Corporation*
200 E. SANDPOINTE AVENUE, SUITE 200
SANTA ANA, CALIFORNIA 92707

Caltrans now has a web site! To get to the web site, go to: http://www.dot.ca.gov

Caltrans Metric

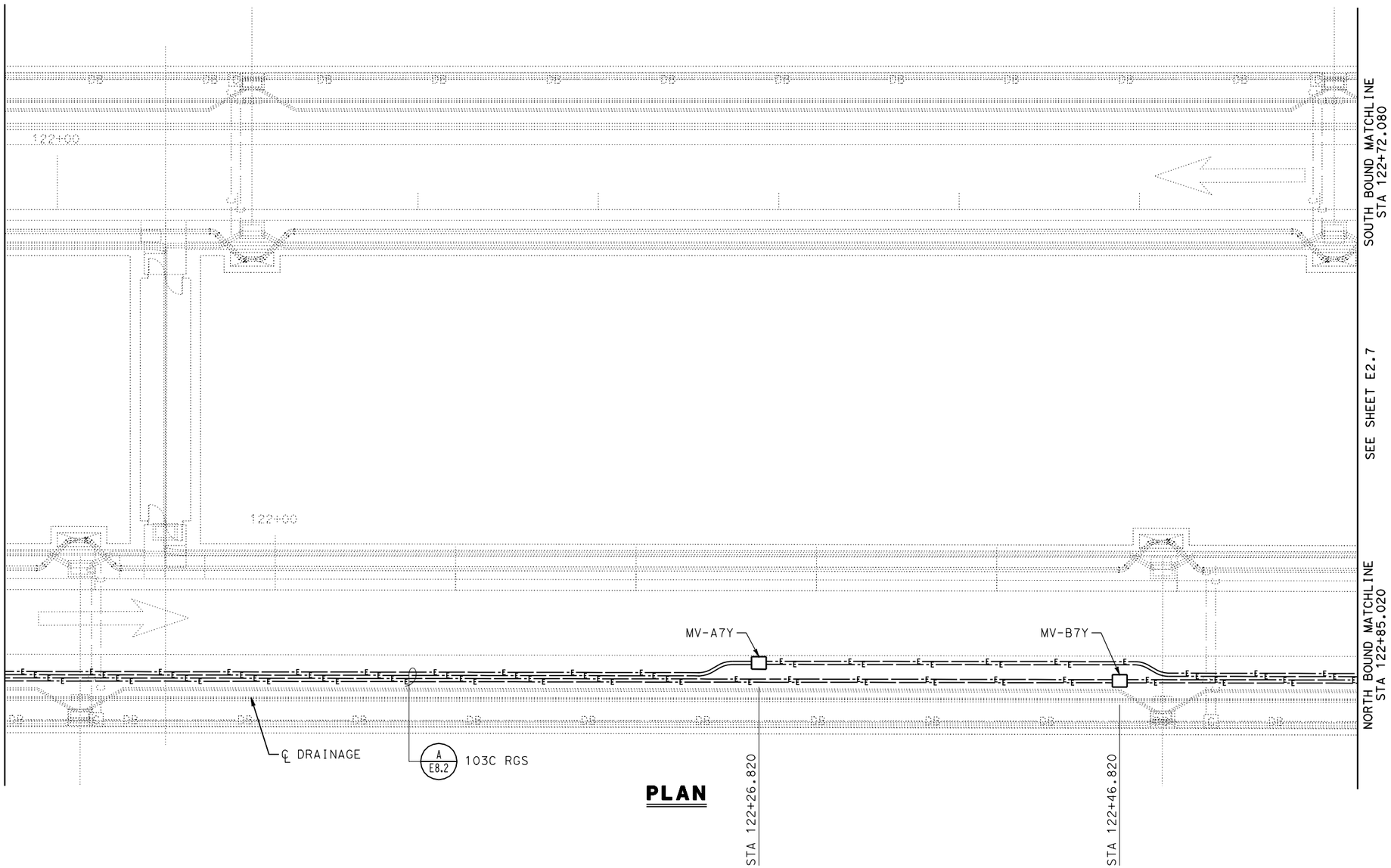

PLAN

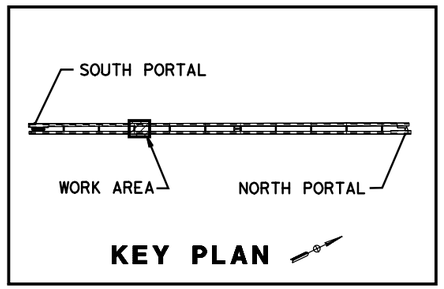

KEY PLAN

ALL DIMENSIONS ARE IN MILLIMETERS UNLESS OTHERWISE SHOWN

TUNNEL UTILITY AND GROUNDING PLAN NO. 6

SCALE 1:125

E2.6

PS&E SUBMITTAL (11/18/05)
NOT FOR CONSTRUCTION

STATE OF CALIFORNIA - DEPARTMENT OF TRANSPORTATION	DESIGN OVERSIGHT	CALCULATED/DESIGNED BY	P. WHOBREY
Caltrans	BEHZAD GOLEMOHAMMADI	CHECKED BY	M. MAUNG
ELECTRICAL		REVISED BY	DATE REVISED
		DATE	9/30/05

RELATIVE BORDER SCALE IS IN MILLIMETERS 0 20 40 60 80

USERNAME => lGraham
DGN FILE => 41123uza018.dgn

CU 04240

EA 1123U1

LAST REVISION 00-00-00

DATE PLOTTED => 09-NOV-2005
TIME PLOTTED => 15:05

DIST	COUNTY	ROUTE	KILOMETER POST TOTAL PROJECT	SHEET No	TOTAL SHEETS
04	SM	1			

Min Maung 9/30/05
REGISTERED ELECTRICAL ENGINEER

PLANS APPROVAL DATE

REGISTERED PROFESSIONAL ENGINEER
MIN MAUNG
No. E012210
Exp. 09/30/06
ELECT
STATE OF CALIFORNIA

The State of California or its officers or agents shall not be responsible for the accuracy or completeness of electronic copies of this plan sheet.

HNTB *Corporation*
200 E. SANDPOINTE AVENUE, SUITE 200
SANTA ANA, CALIFORNIA 92707

Caltrans now has a web site! To get to the web site, go to: http://www.dot.ca.gov

Caltrans Metric

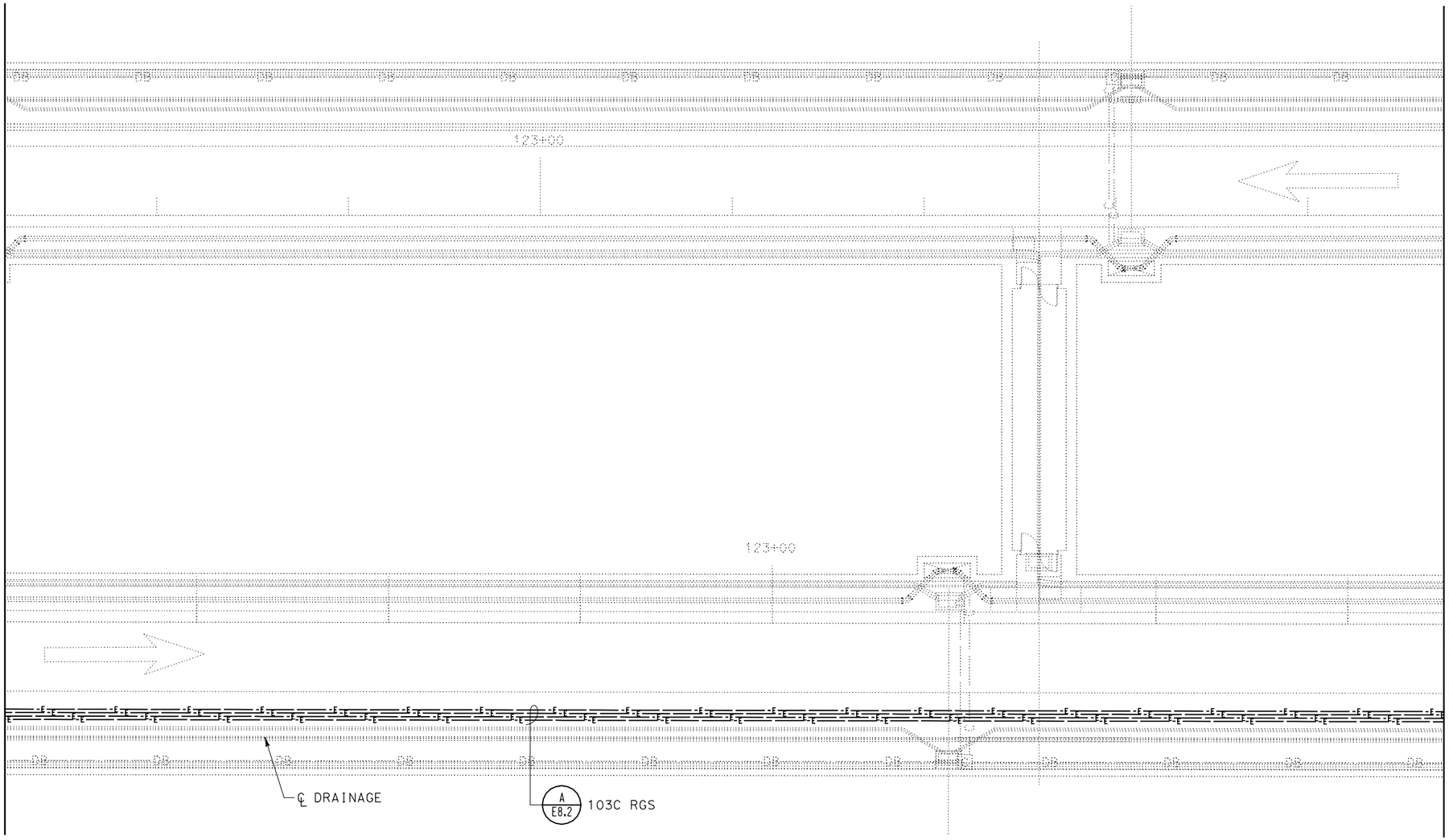

PLAN

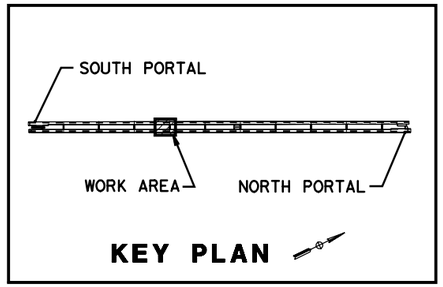

KEY PLAN

ALL DIMENSIONS ARE IN MILLIMETERS UNLESS OTHERWISE SHOWN

TUNNEL UTILITY AND GROUNDING PLAN NO. 7

SCALE 1:125

E2.7

PS&E SUBMITTAL (11/18/05)
NOT FOR CONSTRUCTION

STATE OF CALIFORNIA - DEPARTMENT OF TRANSPORTATION
Caltrans
ELECTRICAL

DESIGN OVERSIGHT: BEHZAD GOLEMOHAMMADI

CALCULATED/DESIGNED BY: P. WHOBREY
CHECKED BY: M. MAUNG

REVISED BY	DATE	DATE REVISED
	9/30/05	

LAST REVISION 00-00-00
DATE PLOTTED => 09-NOV-2005
TIME PLOTTED => 15:06

RELATIVE BORDER SCALE IS IN MILLIMETERS 0 20 40 60 80

USERNAME => lGraham
DGN FILE => 41123uza019.dgn

CU 04240
EA 1123U1

DIST	COUNTY	ROUTE	KILOMETER POST TOTAL PROJECT	SHEET No	TOTAL SHEETS
04	SM	1			

Min Maung 9/30/05
REGISTERED ELECTRICAL ENGINEER

PLANS APPROVAL DATE

REGISTERED PROFESSIONAL ENGINEER
MIN MAUNG
No. E012210
Exp. 09/30/06
ELECT
STATE OF CALIFORNIA

The State of California or its officers or agents shall not be responsible for the accuracy or completeness of electronic copies of this plan sheet.

HNTB *Corporation*
200 E. SANDPOINTE AVENUE, SUITE 200
SANTA ANA, CALIFORNIA 92707

Caltrans now has a web site! To get to the web site, go to: http://www.dot.ca.gov

Caltrans Metric

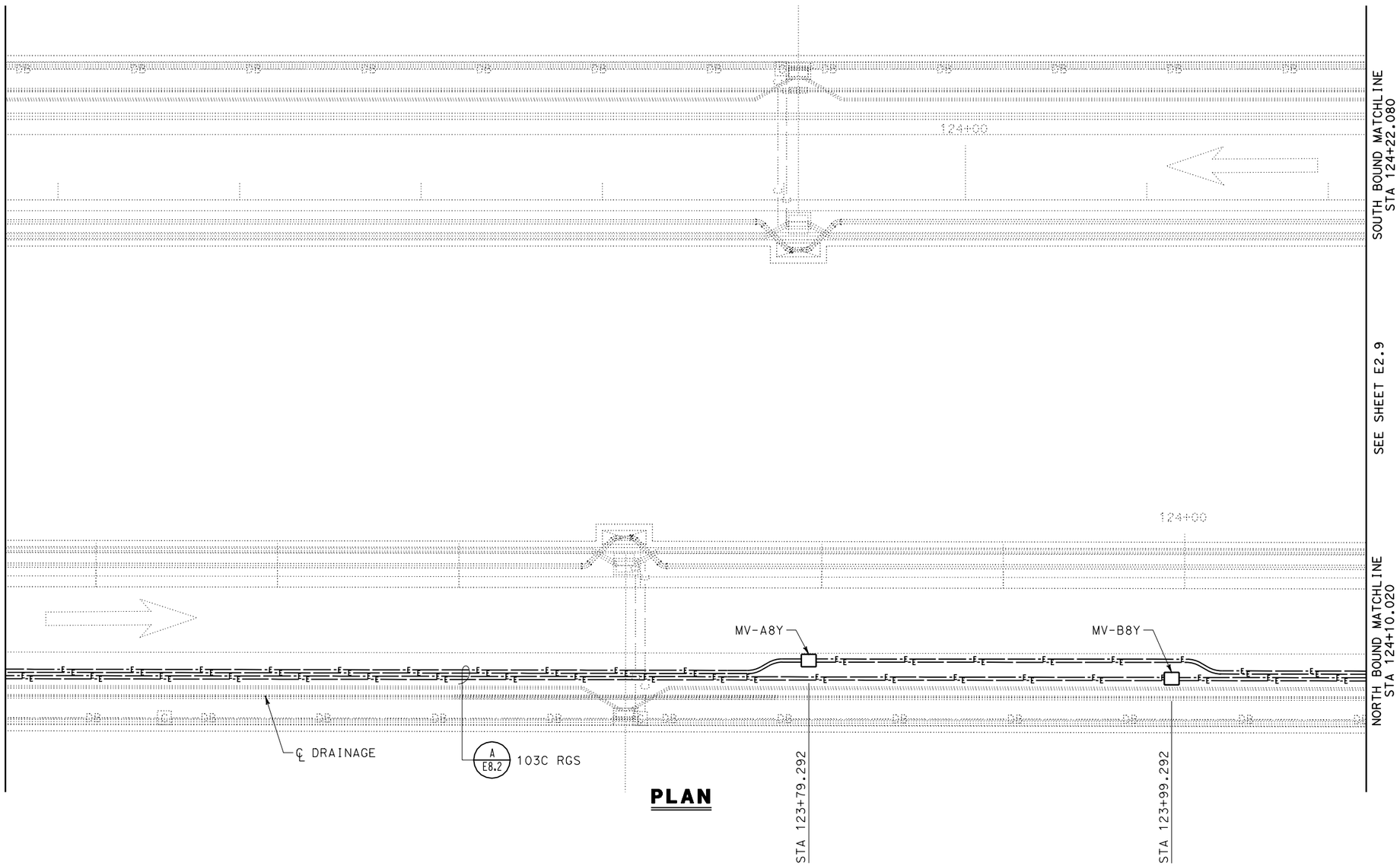

PLAN

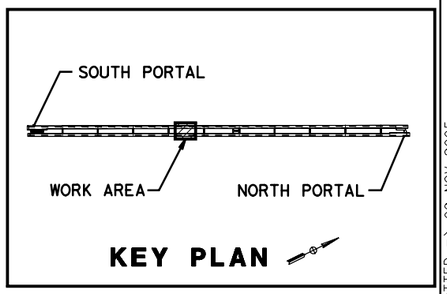

ALL DIMENSIONS ARE IN MILLIMETERS UNLESS OTHERWISE SHOWN

TUNNEL UTILITY AND GROUNDING PLAN NO. 8

SCALE 1:125

E2.8

PS&E SUBMITTAL (11/18/05)
NOT FOR CONSTRUCTION

CALCULATED/DESIGNED BY	P. WHOBREY	DATE	REVISED BY
CHECKED BY	M. MAUNG	9/30/05	DATE REVISED

DESIGN OVERSIGHT
BEHZAD GOLEMOHAMMADI

STATE OF CALIFORNIA - DEPARTMENT OF TRANSPORTATION
Caltrans
ELECTRICAL

LAST REVISION 00-00-00
DATE PLOTTED => 09-NOV-2005
TIME PLOTTED => 15:06

RELATIVE BORDER SCALE IS IN MILLIMETERS 0 20 40 60 80

USERNAME => lGraham
DGN FILE => 41123uza020.dgn

CU 04240
EA 1123U1

DIST	COUNTY	ROUTE	KILOMETER POST TOTAL PROJECT	SHEET No	TOTAL SHEETS
04	SM	1			

Min Maung 9/30/05
REGISTERED ELECTRICAL ENGINEER

PLANS APPROVAL DATE

REGISTERED PROFESSIONAL ENGINEER
MIN MAUNG
No. E012210
Exp. 09/30/06
ELECT
STATE OF CALIFORNIA

The State of California or its officers or agents shall not be responsible for the accuracy or completeness of electronic copies of this plan sheet.

HNTB *Corporation*
200 E. SANDPOINTE AVENUE, SUITE 200
SANTA ANA, CALIFORNIA 92707

Caltrans now has a web site! To get to the web site, go to: http://www.dot.ca.gov

Caltrans Metric

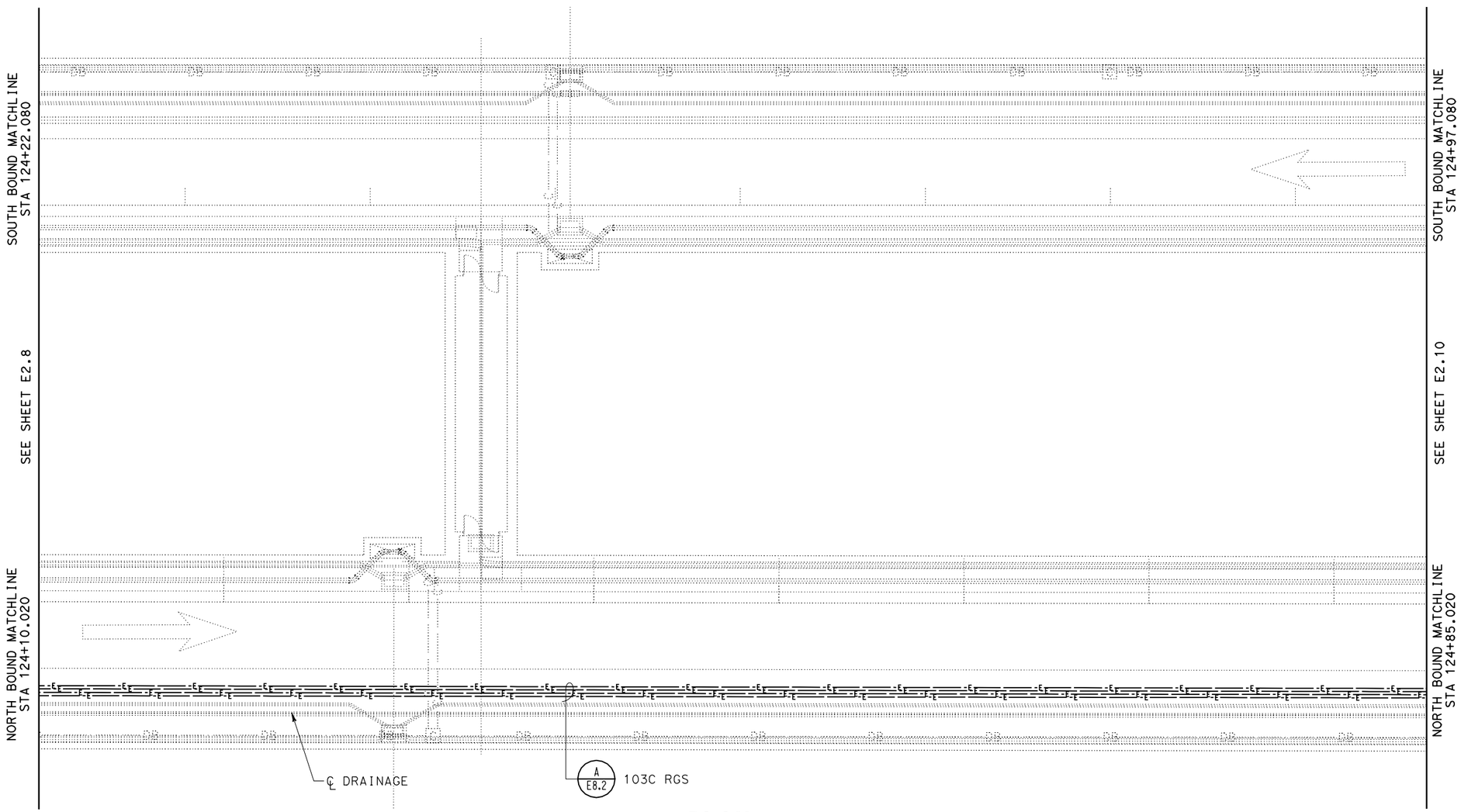

PLAN

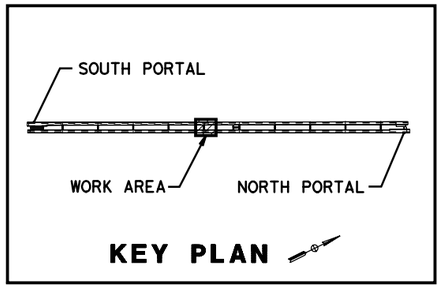

ALL DIMENSIONS ARE IN MILLIMETERS UNLESS OTHERWISE SHOWN

TUNNEL UTILITY AND GROUNDING PLAN NO. 9

SCALE 1:125

E2.9

PS&E SUBMITTAL (11/18/05)
NOT FOR CONSTRUCTION

CALCULATED/ DESIGNED BY	P. WHOBREY	DATE	REVISED BY
CHECKED BY	M. MAUNG	9/30/05	DATE REVISED

DESIGN OVERSIGHT
BEHZAD GOLEMOHAMMADI

STATE OF CALIFORNIA - DEPARTMENT OF TRANSPORTATION
Caltrans
ELECTRICAL

RELATIVE BORDER SCALE IS IN MILLIMETERS 0 20 40 60 80

USERNAME => lGraham
DGN FILE => 41123uza021.dgn

CU 04240

EA 1123U1

LAST REVISION 00-00-00
DATE PLOTTED => 09-NOV-2005
TIME PLOTTED => 15:06

DIST	COUNTY	ROUTE	KILOMETER POST TOTAL PROJECT	SHEET No	TOTAL SHEETS
04	SM	1			

Min Maung 9/30/05
REGISTERED ELECTRICAL ENGINEER

PLANS APPROVAL DATE

REGISTERED PROFESSIONAL ENGINEER
MIN MAUNG
No. E012210
Exp. 09/30/06
ELECT
STATE OF CALIFORNIA

The State of California or its officers or agents shall not be responsible for the accuracy or completeness of electronic copies of this plan sheet.

HNTB *Corporation*
200 E. SANDPOINTE AVENUE, SUITE 200
SANTA ANA, CALIFORNIA 92707

Caltrans now has a web site! To get to the web site, go to: http://www.dot.ca.gov

Caltrans Metric

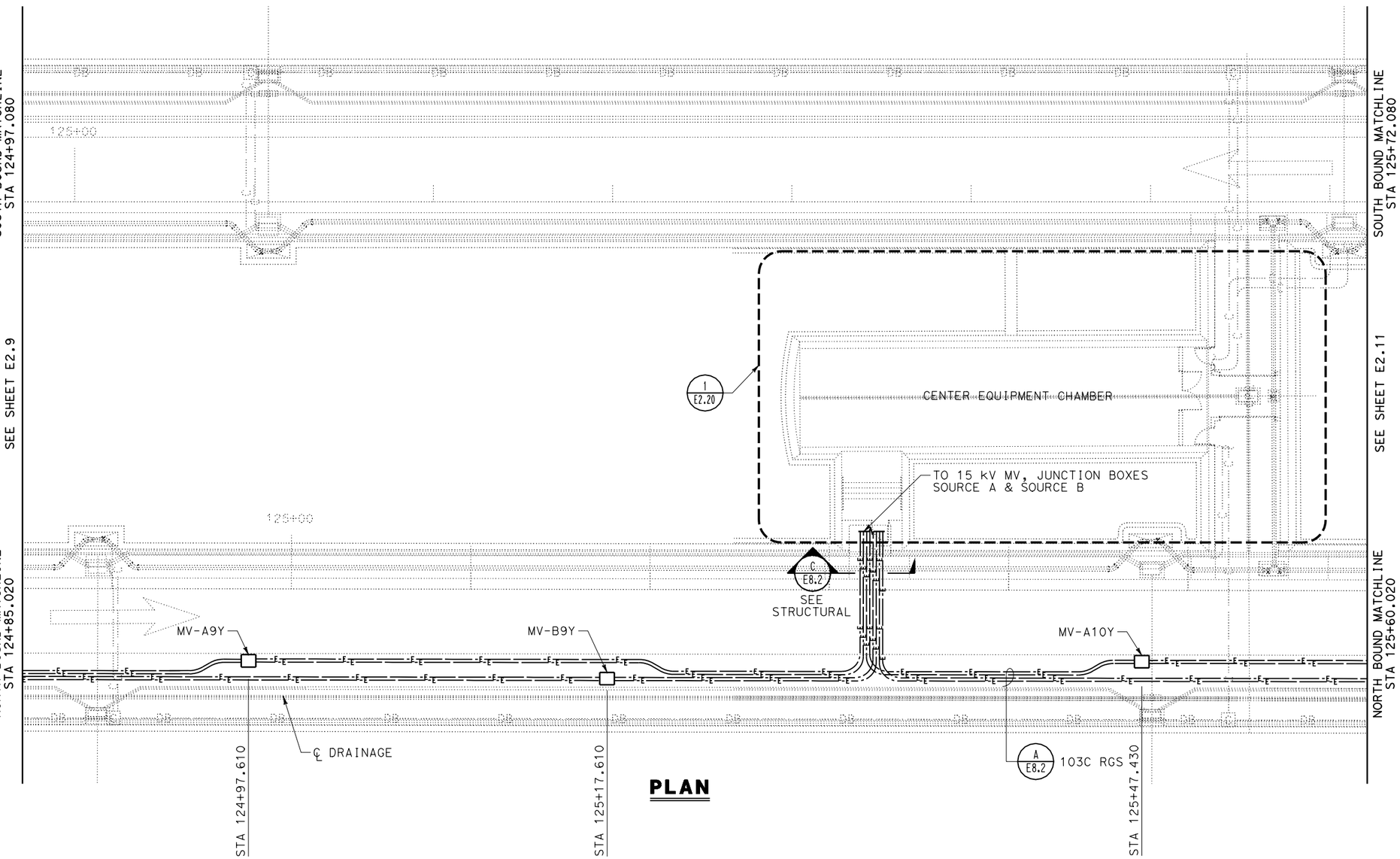

PLAN

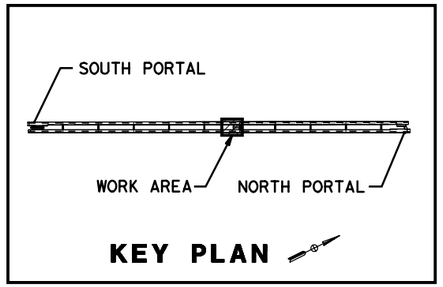

KEY PLAN

ALL DIMENSIONS ARE IN
MILLIMETERS UNLESS OTHERWISE SHOWN

TUNNEL UTILITY AND GROUNDING PLAN NO. 10

SCALE 1:125

E2.10

PS&E SUBMITTAL (11/18/05)
NOT FOR CONSTRUCTION

STATE OF CALIFORNIA - DEPARTMENT OF TRANSPORTATION
Caltrans
ELECTRICAL

DESIGN OVERSIGHT: BEHZAD GOLEMOHAMMADI

CALCULATED/DESIGNED BY: P. WHOBREY
CHECKED BY: M. MAUNG

DATE REVISED BY	DATE REVISED
9/30/05	

LAST REVISION 00-00-00
DATE PLOTTED => 09-NOV-2005
TIME PLOTTED => 15:06

RELATIVE BORDER SCALE IS IN MILLIMETERS 0 20 40 60 80

USERNAME => lGraham
DGN FILE => 41123uza022.dgn

CU 04240

EA 1123U1

DIST	COUNTY	ROUTE	KILOMETER POST TOTAL PROJECT	SHEET No	TOTAL SHEETS
04	SM	1			

Min Maung 9/30/05
REGISTERED ELECTRICAL ENGINEER

PLANS APPROVAL DATE

REGISTERED PROFESSIONAL ENGINEER
MIN MAUNG
No. E012210
Exp. 09/30/06
ELECT
STATE OF CALIFORNIA

The State of California or its officers or agents shall not be responsible for the accuracy or completeness of electronic copies of this plan sheet.

HNTB *Corporation*
200 E. SANDPOINTE AVENUE, SUITE 200
SANTA ANA, CALIFORNIA 92707

Caltrans now has a web site! To get to the web site, go to: http://www.dot.ca.gov

Caltrans Metric

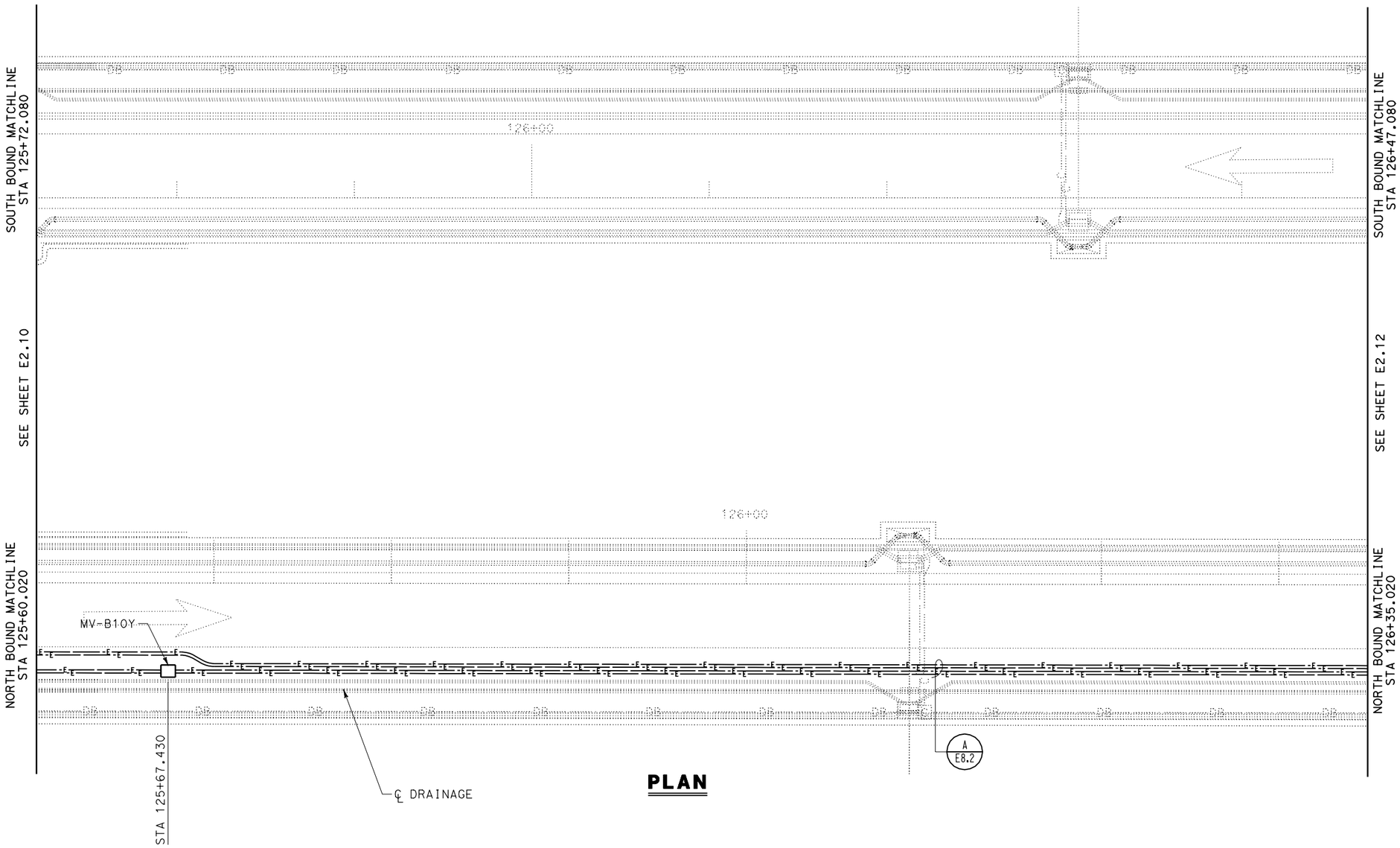

PLAN

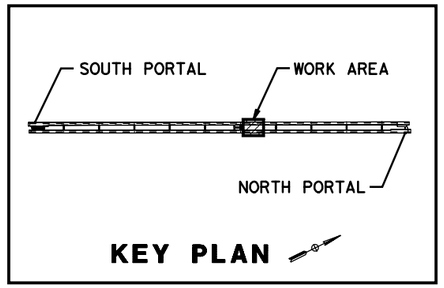

ALL DIMENSIONS ARE IN MILLIMETERS UNLESS OTHERWISE SHOWN

TUNNEL UTILITY AND GROUNDING PLAN NO. 11

SCALE 1:125

E2.11

PS&E SUBMITTAL (11/18/05)
NOT FOR CONSTRUCTION

STATE OF CALIFORNIA - DEPARTMENT OF TRANSPORTATION
Caltrans **ELECTRICAL**

DESIGN OVERSIGHT: BEHZAD GOLEMOHAMMADI

CALCULATED/DESIGNED BY: P. WHOBREY
CHECKED BY: M. MAUNG

REVISED BY	DATE	DATE REVISED
	9/30/05	

LAST REVISION 00-00-00 | DATE PLOTTED => 09-NOV-2005 | TIME PLOTTED => 15:06

RELATIVE BORDER SCALE IS IN MILLIMETERS 0 20 40 60 80

USERNAME => lGraham
DGN FILE => 41123uza023.dgn

CU 04240 | EA 1123U1

DIST	COUNTY	ROUTE	KILOMETER POST TOTAL PROJECT	SHEET No	TOTAL SHEETS
04	SM	1			

Min Maung 9/30/05
REGISTERED ELECTRICAL ENGINEER

PLANS APPROVAL DATE

REGISTERED PROFESSIONAL ENGINEER
MIN MAUNG
No. E012210
Exp. 09/30/06
ELECT
STATE OF CALIFORNIA

The State of California or its officers or agents shall not be responsible for the accuracy or completeness of electronic copies of this plan sheet.

HNTB *Corporation*
200 E. SANDPOINTE AVENUE, SUITE 200
SANTA ANA, CALIFORNIA 92707

Caltrans now has a web site! To get to the web site, go to: http://www.dot.ca.gov

Caltrans Metric

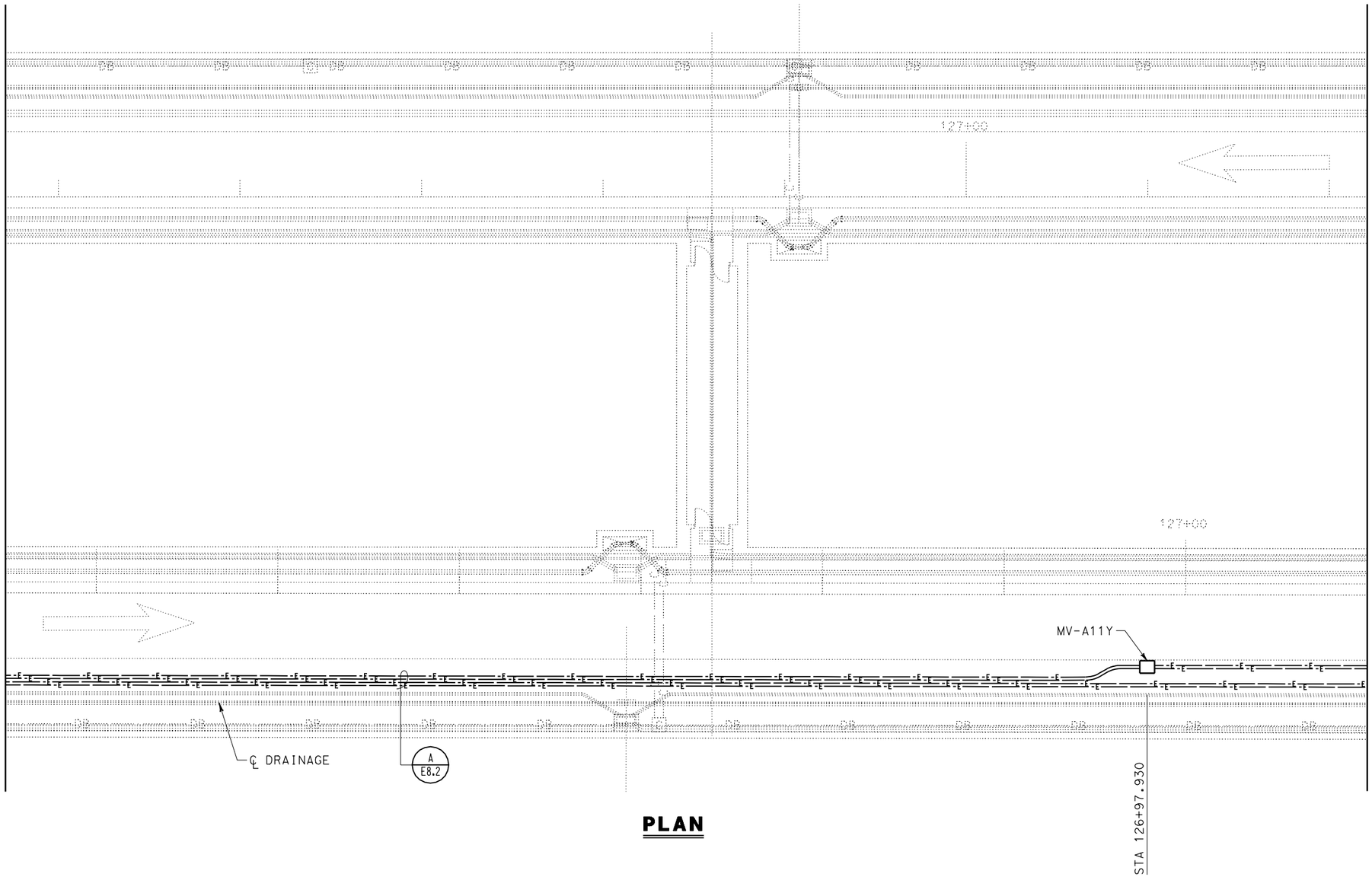

PLAN

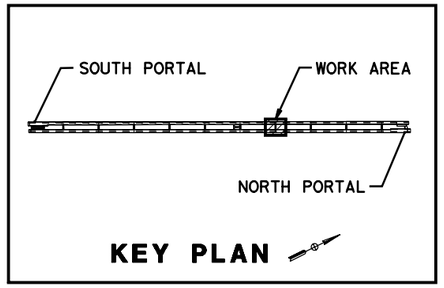

ALL DIMENSIONS ARE IN MILLIMETERS UNLESS OTHERWISE SHOWN

TUNNEL UTILITY AND GROUNDING PLAN NO. 12

SCALE 1:125

E2.12

PS&E SUBMITTAL (11/18/05)
NOT FOR CONSTRUCTION

STATE OF CALIFORNIA - DEPARTMENT OF TRANSPORTATION
Caltrans
ELECTRICAL

DESIGN OVERSIGHT: BEHZAD GOLEMOHAMMADI

CALCULATED/DESIGNED BY: P. WHOBREY
CHECKED BY: M. MAUNG

REVISED BY	DATE	DATE REVISED
	9/30/05	

LAST REVISION 00-00-00 | DATE PLOTTED => 09-NOV-2005 | TIME PLOTTED => 15:06

RELATIVE BORDER SCALE IS IN MILLIMETERS 0 20 40 60 80

USERNAME => lGraham
DGN FILE => 41123uza024.dgn

CU 04240 | EA 1123U1

DIST	COUNTY	ROUTE	KILOMETER POST TOTAL PROJECT	SHEET No	TOTAL SHEETS
04	SM	1			

Min Maung 9/30/05
REGISTERED ELECTRICAL ENGINEER

PLANS APPROVAL DATE

REGISTERED PROFESSIONAL ENGINEER
MIN MAUNG
No. E012210
Exp. 09/30/06
ELECT
STATE OF CALIFORNIA

The State of California or its officers or agents shall not be responsible for the accuracy or completeness of electronic copies of this plan sheet.

HNTB *Corporation*
200 E. SANDPOINTE AVENUE, SUITE 200
SANTA ANA, CALIFORNIA 92707

Caltrans now has a web site! To get to the web site, go to: http://www.dot.ca.gov

Caltrans Metric

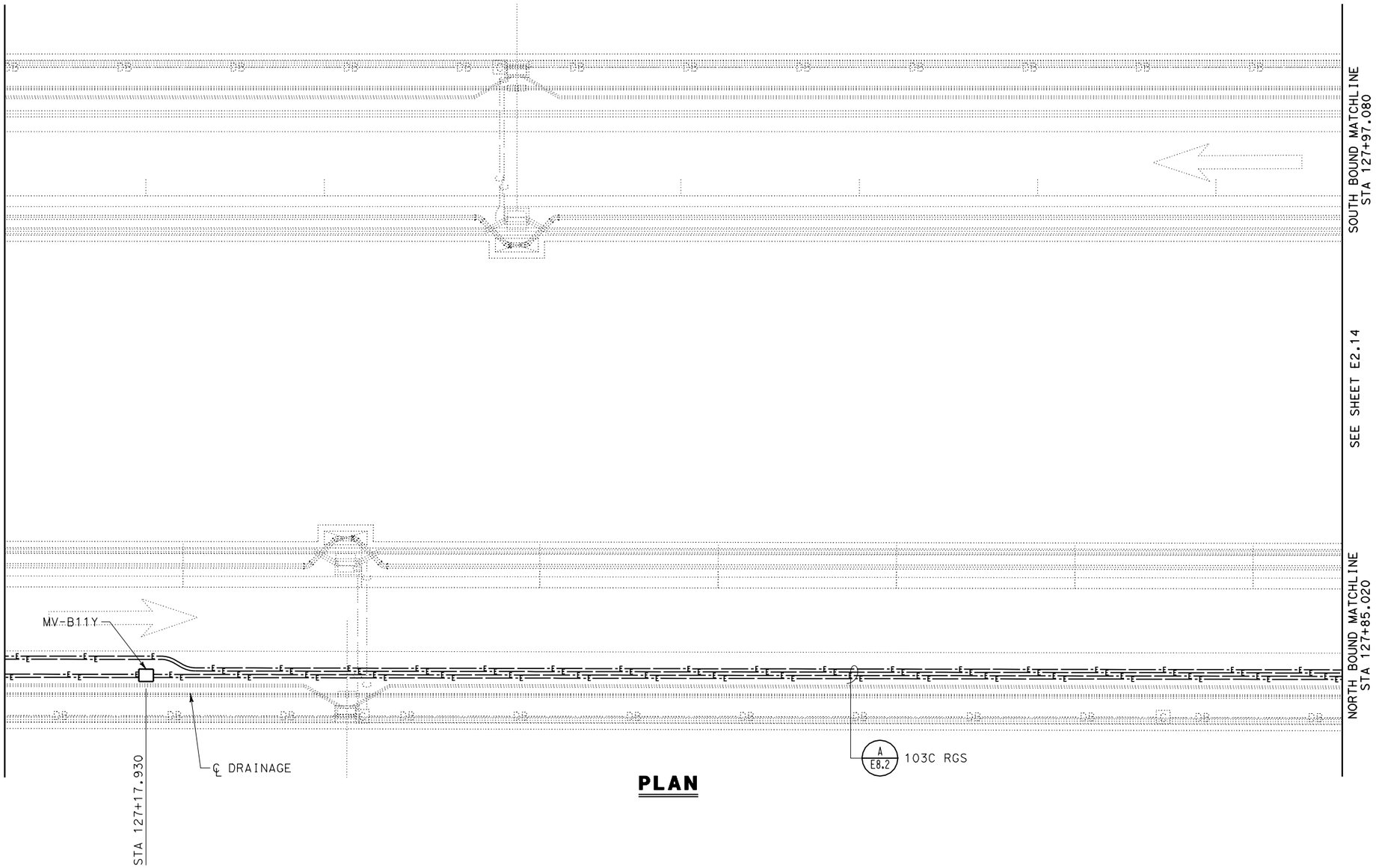

PLAN

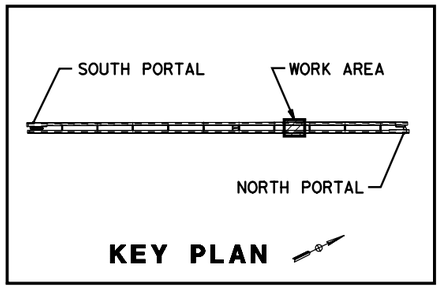

KEY PLAN

ALL DIMENSIONS ARE IN MILLIMETERS UNLESS OTHERWISE SHOWN

TUNNEL UTILITY AND GROUNDING PLAN NO. 13

SCALE 1:125

E2.13

PS&E SUBMITTAL (11/18/05)
NOT FOR CONSTRUCTION

STATE OF CALIFORNIA - DEPARTMENT OF TRANSPORTATION
Caltrans
ELECTRICAL

DESIGN OVERSIGHT: BEHZAD GOLEMOHAMMADI

CALCULATED/DESIGNED BY: P. WHOBREY
CHECKED BY: M. MAUNG

DATE REVISED	BY
9/30/05	

DATE REVISED

LAST REVISION 00-00-00
DATE PLOTTED => 09-NOV-2005
TIME PLOTTED => 15:06

RELATIVE BORDER SCALE IS IN MILLIMETERS 0 20 40 60 80

USERNAME => lGraham
DGN FILE => 41123uza025.dgn

CU 04240
EA 1123U1

DIST	COUNTY	ROUTE	KILOMETER POST TOTAL PROJECT	SHEET No	TOTAL SHEETS
04	SM	1			

Min Maung 9/30/05
REGISTERED ELECTRICAL ENGINEER

PLANS APPROVAL DATE

REGISTERED PROFESSIONAL ENGINEER
MIN MAUNG
No. E012210
Exp. 09/30/06
ELECT
STATE OF CALIFORNIA

The State of California or its officers or agents shall not be responsible for the accuracy or completeness of electronic copies of this plan sheet.

HNTB *Corporation*
200 E. SANDPOINTE AVENUE, SUITE 200
SANTA ANA, CALIFORNIA 92707

Caltrans now has a web site! To get to the web site, go to: http://www.dot.ca.gov

Caltrans Metric

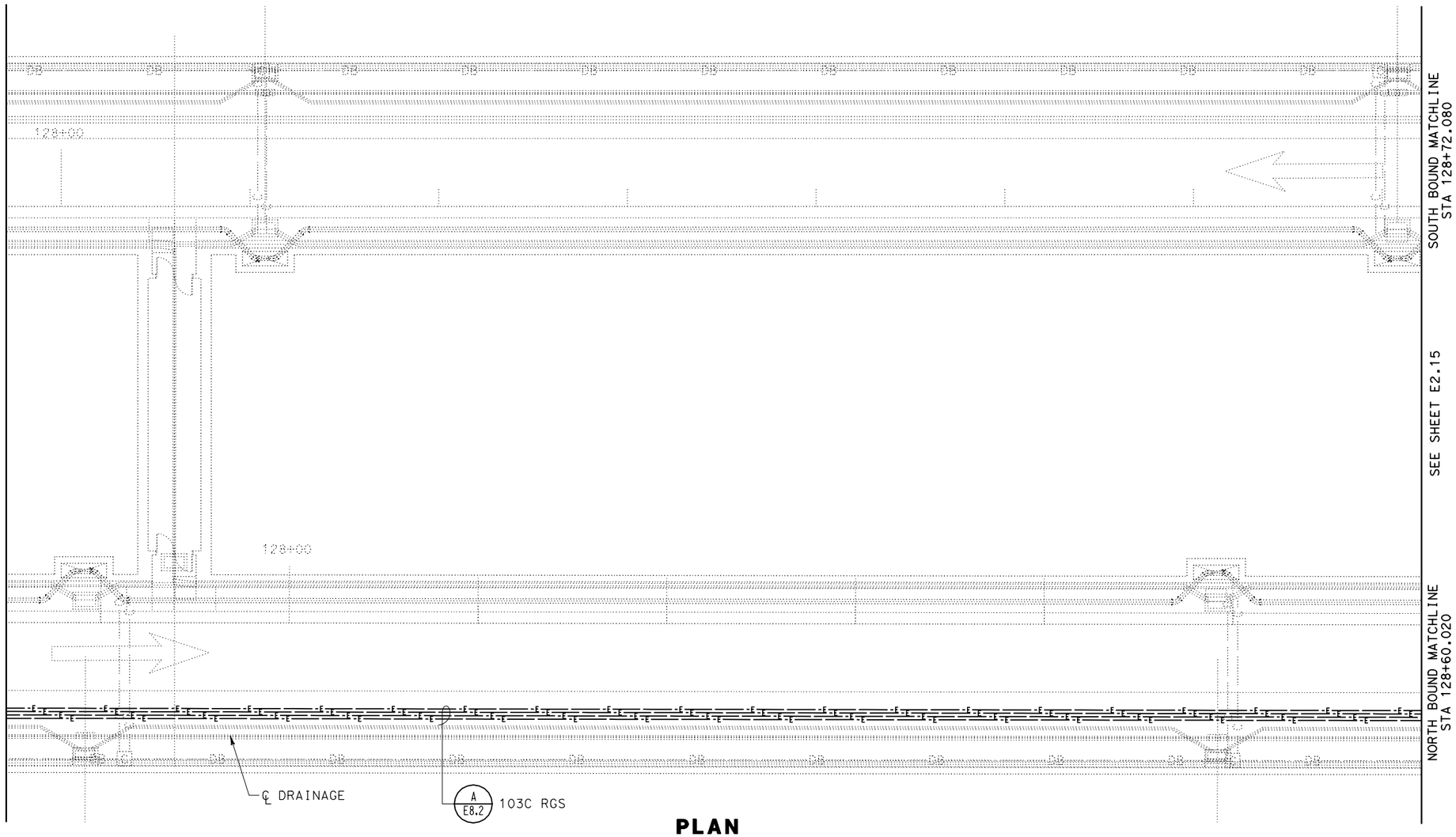

PLAN

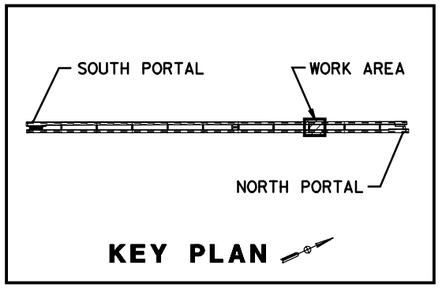

ALL DIMENSIONS ARE IN MILLIMETERS UNLESS OTHERWISE SHOWN

TUNNEL UTILITY AND GROUNDING PLAN NO. 14

SCALE 1:125

E2.14

PS&E SUBMITTAL (11/18/05)
NOT FOR CONSTRUCTION

CALCULATED/ DESIGNED BY	P. WHOBREY	DATE	REVISED BY
CHECKED BY	M. MAUNG	9/30/05	DATE REVISED

DESIGN OVERSIGHT
BEHZAD GOLEMOHAMMADI

STATE OF CALIFORNIA - DEPARTMENT OF TRANSPORTATION
Caltrans
ELECTRICAL

LAST REVISION 00-00-00
DATE PLOTTED => 09-NOV-2005
TIME PLOTTED => 15:06

RELATIVE BORDER SCALE IS IN MILLIMETERS 0 20 40 60 80

USERNAME => lGraham
DGN FILE => 41123uza026.dgn

CU 04240

EA 1123U1

DIST	COUNTY	ROUTE	KILOMETER POST TOTAL PROJECT	SHEET No	TOTAL SHEETS
04	SM	1			

Min Maung 9/30/05
REGISTERED ELECTRICAL ENGINEER

PLANS APPROVAL DATE

REGISTERED PROFESSIONAL ENGINEER
MIN MAUNG
No. E012210
Exp. 09/30/06
ELECT
STATE OF CALIFORNIA

The State of California or its officers or agents shall not be responsible for the accuracy or completeness of electronic copies of this plan sheet.

HNTB *Corporation*
200 E. SANDPOINTE AVENUE, SUITE 200
SANTA ANA, CALIFORNIA 92707

Caltrans now has a web site! To get to the web site, go to: http://www.dot.ca.gov

Caltrans Metric

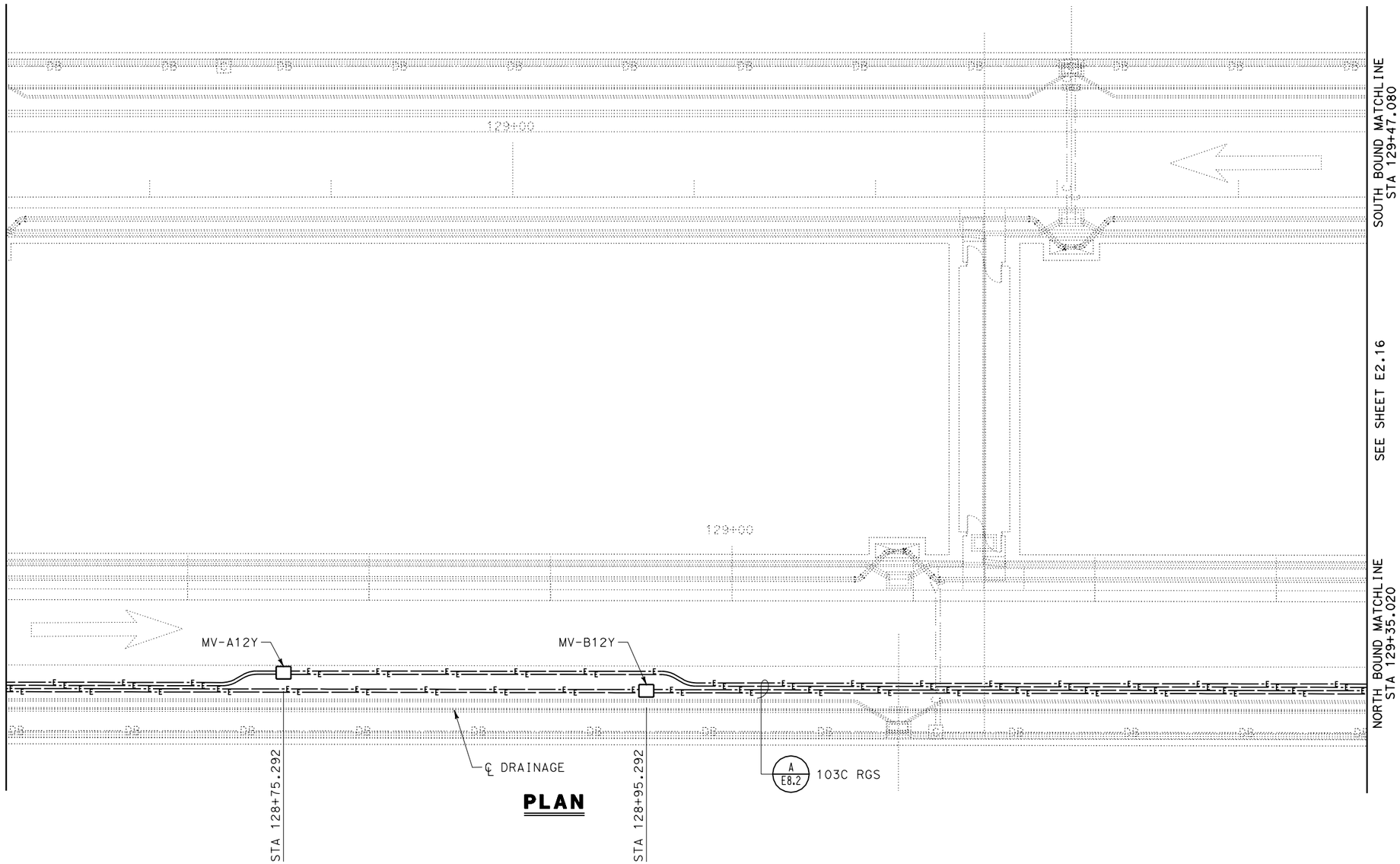

PLAN

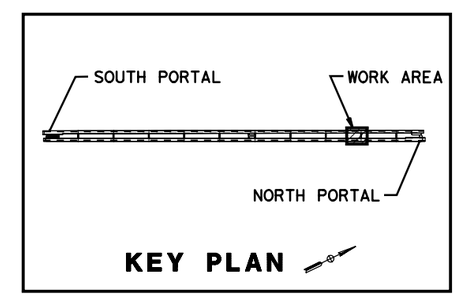

KEY PLAN

ALL DIMENSIONS ARE IN MILLIMETERS UNLESS OTHERWISE SHOWN

TUNNEL UTILITY AND GROUNDING PLAN NO. 15

SCALE 1:125

E2.15

PS&E SUBMITTAL (11/18/05)
NOT FOR CONSTRUCTION

STATE OF CALIFORNIA - DEPARTMENT OF TRANSPORTATION
Caltrans **ELECTRICAL**

DESIGN OVERSIGHT: BEHZAD GOLEMOHAMMADI

CALCULATED/DESIGNED BY: P. WHOBREY
CHECKED BY: M. MAUNG

REVISED BY	DATE	DATE REVISED
	9/30/05	

LAST REVISION 00-00-00
DATE PLOTTED => 09-NOV-2005
TIME PLOTTED => 15:06

RELATIVE BORDER SCALE IS IN MILLIMETERS 0 20 40 60 80

USERNAME => lGraham
DGN FILE => 41123uza027.dgn

CU 04240
EA 1123U1

DIST	COUNTY	ROUTE	KILOMETER POST TOTAL PROJECT	SHEET No	TOTAL SHEETS
04	SM	1			

Min Maung 9/30/05
REGISTERED ELECTRICAL ENGINEER

PLANS APPROVAL DATE

REGISTERED PROFESSIONAL ENGINEER
MIN MAUNG
No. E042210
Exp. 09/30/06
ELECT
STATE OF CALIFORNIA

The State of California or its officers or agents shall not be responsible for the accuracy or completeness of electronic copies of this plan sheet.

HNTB *Corporation*
200 E. SANDPOINTE AVENUE, SUITE 200
SANTA ANA, CALIFORNIA 92707

Caltrans now has a web site! To get to the web site, go to: http://www.dot.ca.gov

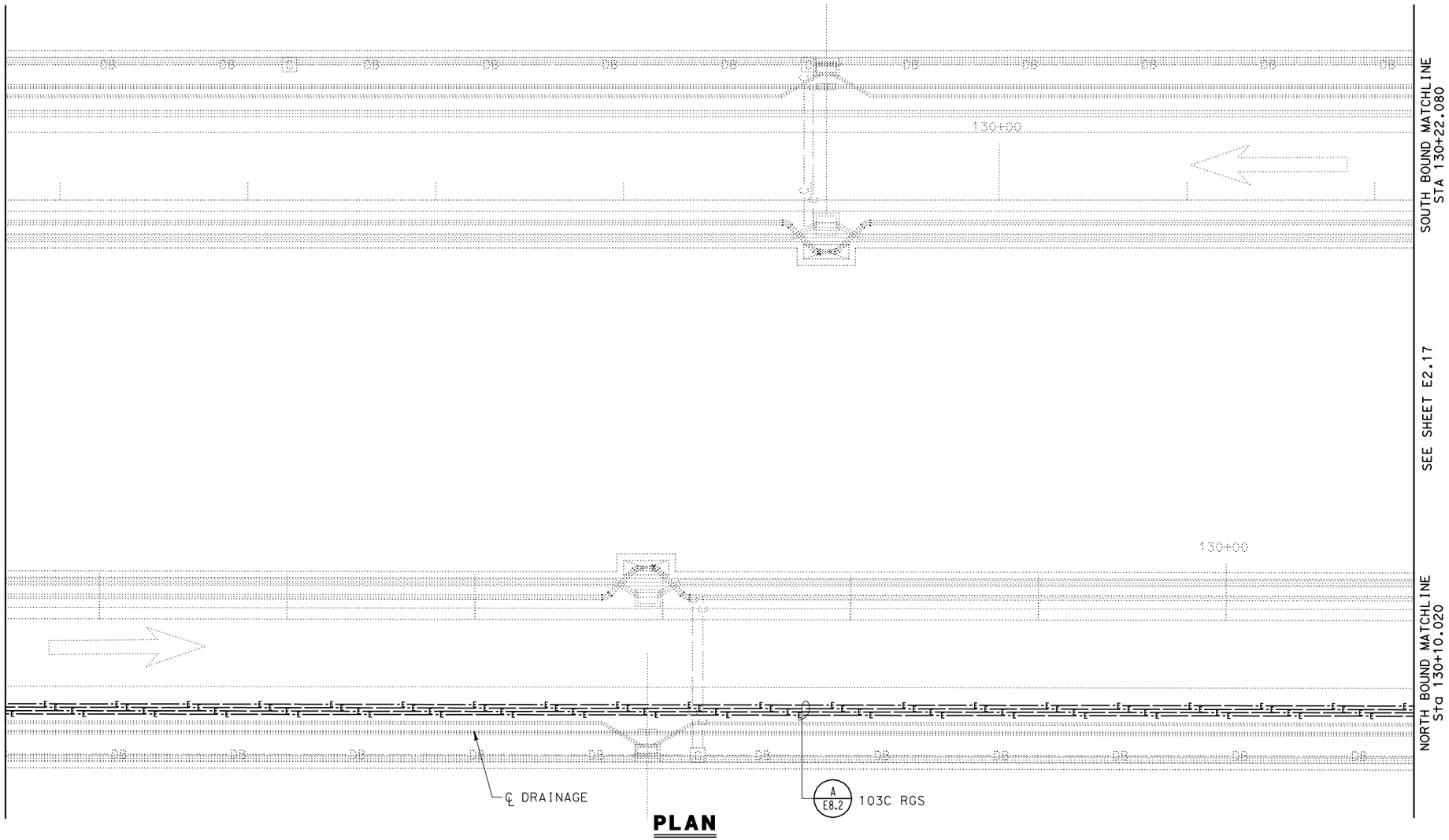

PLAN

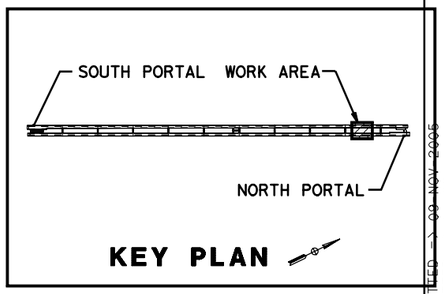

KEY PLAN

ALL DIMENSIONS ARE IN MILLIMETERS UNLESS OTHERWISE SHOWN

TUNNEL UTILITY AND GROUNDING PLAN NO. 16

SCALE 1:125

E2.16

PS&E SUBMITTAL (11/18/05)
NOT FOR CONSTRUCTION

STATE OF CALIFORNIA - DEPARTMENT OF TRANSPORTATION
Caltrans
ELECTRICAL

DESIGN OVERSIGHT: BEHZAD GOLEMOHAMMADI
CALCULATED/DESIGNED BY: P. WHOBREY
CHECKED BY: M. MAUNG
DATE: 9/30/05
REVISED BY
DATE REVISED

LAST REVISION 00-00-00
DATE PLOTTED => 09 NOV 2005
TIME PLOTTED => 15:06

RELATIVE BORDER SCALE IS IN MILLIMETERS 0 20 40 60 80

USERNAME => lGraham
DGN FILE => 41123uza028.dgn

CU 04240

EA 1123U1

DIST	COUNTY	ROUTE	KILOMETER POST TOTAL PROJECT	SHEET No	TOTAL SHEETS
04	SM	1			

Min Maung 9/30/05
REGISTERED ELECTRICAL ENGINEER

PLANS APPROVAL DATE

REGISTERED PROFESSIONAL ENGINEER
MIN MAUNG
No. E012210
Exp. 09/30/06
ELECT
STATE OF CALIFORNIA

The State of California or its officers or agents shall not be responsible for the accuracy or completeness of electronic copies of this plan sheet.

HNTB *Corporation*
200 E. SANDPOINTE AVENUE, SUITE 200
SANTA ANA, CALIFORNIA 92707

Caltrans now has a web site! To get to the web site, go to: http://www.dot.ca.gov

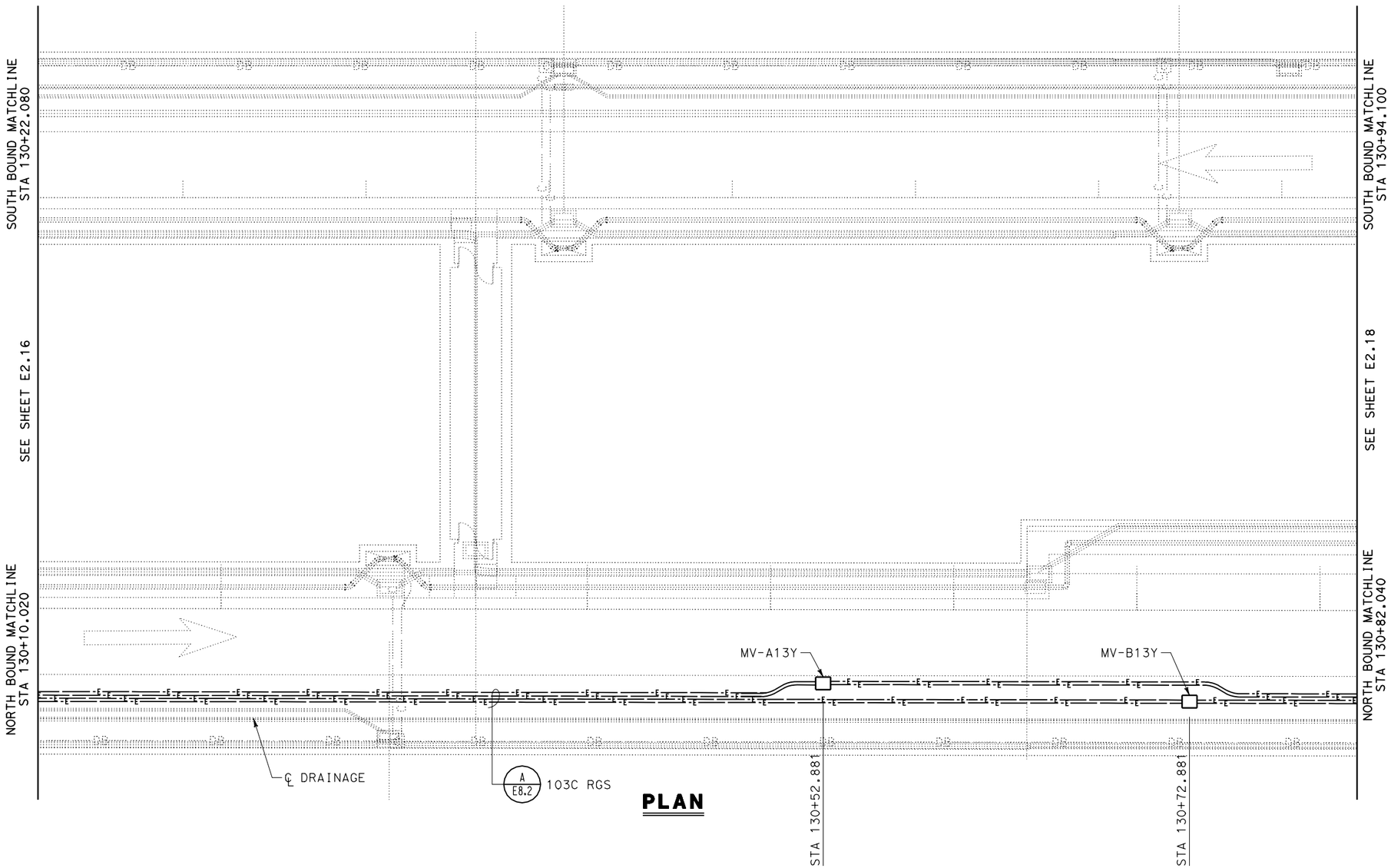

PLAN

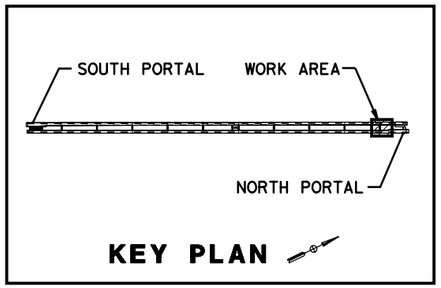

ALL DIMENSIONS ARE IN MILLIMETERS UNLESS OTHERWISE SHOWN

TUNNEL UTILITY AND GROUNDING PLAN NO. 17

SCALE 1:125

E2.17

PS&E SUBMITTAL (11/18/05)
NOT FOR CONSTRUCTION

STATE OF CALIFORNIA - DEPARTMENT OF TRANSPORTATION
Caltrans
ELECTRICAL

DESIGN OVERSIGHT: BEHZAD GOLEMOHAMMADI

CALCULATED/DESIGNED BY: P. WHOBREY
CHECKED BY: M. MAUNG

REVISED BY	DATE	DATE REVISED
	9/30/05	

LAST REVISION 00-00-00
DATE PLOTTED => 09-NOV-2005
TIME PLOTTED => 15:06

RELATIVE BORDER SCALE IS IN MILLIMETERS 0 20 40 60 80

USERNAME => lGraham
DGN FILE => 41123uza029.dgn

CU 04240
EA 1123U1

DIST	COUNTY	ROUTE	KILOMETER POST TOTAL PROJECT	SHEET No	TOTAL SHEETS
04	SM	1			

Min Maung 9/30/05
REGISTERED ELECTRICAL ENGINEER

PLANS APPROVAL DATE

REGISTERED PROFESSIONAL ENGINEER MIN MAUNG No. E012210 Exp. 09/30/06 ELECT STATE OF CALIFORNIA

The State of California or its officers or agents shall not be responsible for the accuracy or completeness of electronic copies of this plan sheet.

HNTB *Corporation*
200 E. SANDPOINTE AVENUE, SUITE 200
SANTA ANA, CALIFORNIA 92707

Caltrans now has a web site! To get to the web site, go to: http://www.dot.ca.gov

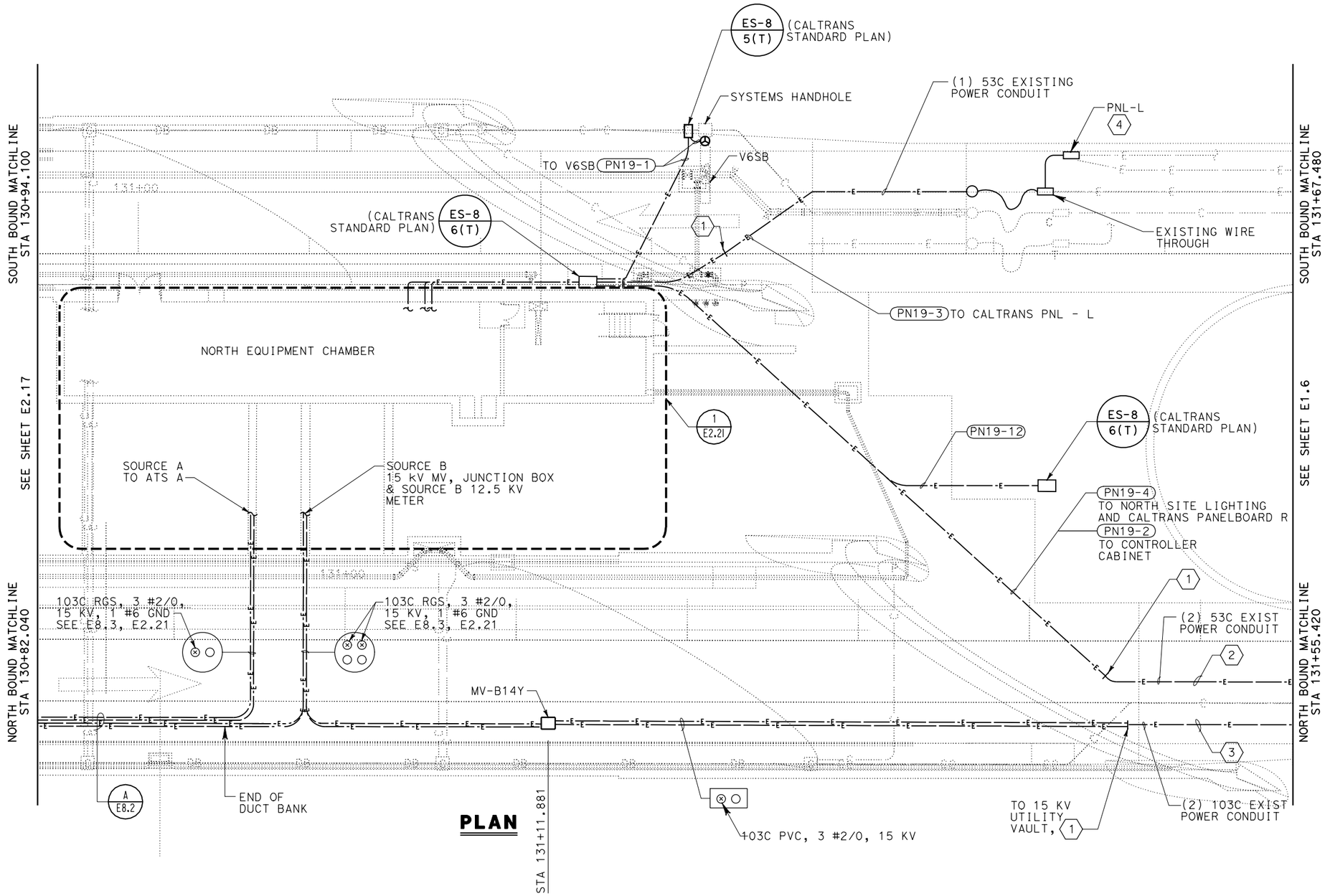

PLAN

SHEET NOTES:

1. INTERCEPT EXISTING CALTRANS CONDUIT AND PULL IN WIRES.
2. PULL IN WIRES INTO EXISTING CONDUIT UP TO THE FOLLOWING EQUIPMENTS:
   a) 3 #8 + #8 GROUND TO CONTROLLER CABINET.
   b) 3 #1 + #6 GROUND TO PNL-R.
   c) 4#10 + #10 GROUND TO NORTH SITE LIGHTING.

   INCLUDE ONLY THE LARGEST GROUND CONDUCTOR IN A CONDUIT.
3. PULL IN 3 #2/0, 15 KV INTO EXISTING CONDUIT UP TO PG&E VAULT.
4. PANELBOARD L SUPPLIED BY OTHERS. FEEDER WIRES AND ITS TERMINATION UNDER ELECTRICAL SPECIFICATIONS.

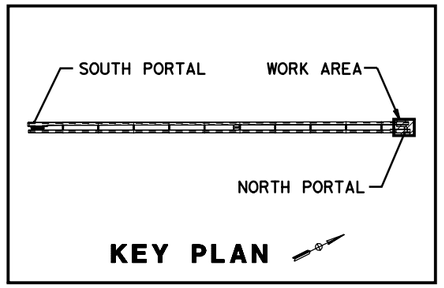

ALL DIMENSIONS ARE IN MILLIMETERS UNLESS OTHERWISE SHOWN

TUNNEL UTILITY AND GROUNDING PLAN NO. 18

SCALE 1:125

E2.18

PS&E SUBMITTAL (11/18/05)
NOT FOR CONSTRUCTION

	DATE	REVISED BY	DATE REVISED
CALCULATED/DESIGNED BY	P. WHOBREY		
CHECKED BY	M. MAUNG	9/30/05	

DESIGN OVERSIGHT: BEHZAD GOLEMOHAMMADI

STATE OF CALIFORNIA - DEPARTMENT OF TRANSPORTATION
Caltrans
ELECTRICAL

LAST REVISION 00-00-00
DATE PLOTTED => 09-NOV-2005
TIME PLOTTED => 15:06

RELATIVE BORDER SCALE IS IN MILLIMETERS 0 20 40 60 80

USERNAME => lGraham
DGN FILE => 41123uza030.dgn

CU 04240 EA 1123U1

DIST	COUNTY	ROUTE	KILOMETER POST TOTAL PROJECT	SHEET No	TOTAL SHEETS
04	SM	1			

Min Maung 9/30/05
REGISTERED ELECTRICAL ENGINEER

PLANS APPROVAL DATE

REGISTERED PROFESSIONAL ENGINEER MIN MAUNG No. E012210 Exp. 09/30/06 ELECT STATE OF CALIFORNIA

The State of California or its officers or agents shall not be responsible for the accuracy or completeness of electronic copies of this plan sheet.

HNTB *Corporation*
200 E. SANDPOINTE AVENUE, SUITE 200
SANTA ANA, CALIFORNIA 92707

Caltrans now has a web site! To get to the web site, go to: http://www.dot.ca.gov

SHEET NOTES:

1. FOR TYPICAL EQUIPMENT PAD SEE SHEET S7.18.
2. FOR EQUIPMENT ELEVATION IN CHAMBERS, SEE SHEETS E7.1 TO E7.3
3. FOR TYPICAL STUB UP AND EQUIPMENT MOUNTING DETAILS, SEE SHEET E8.4.

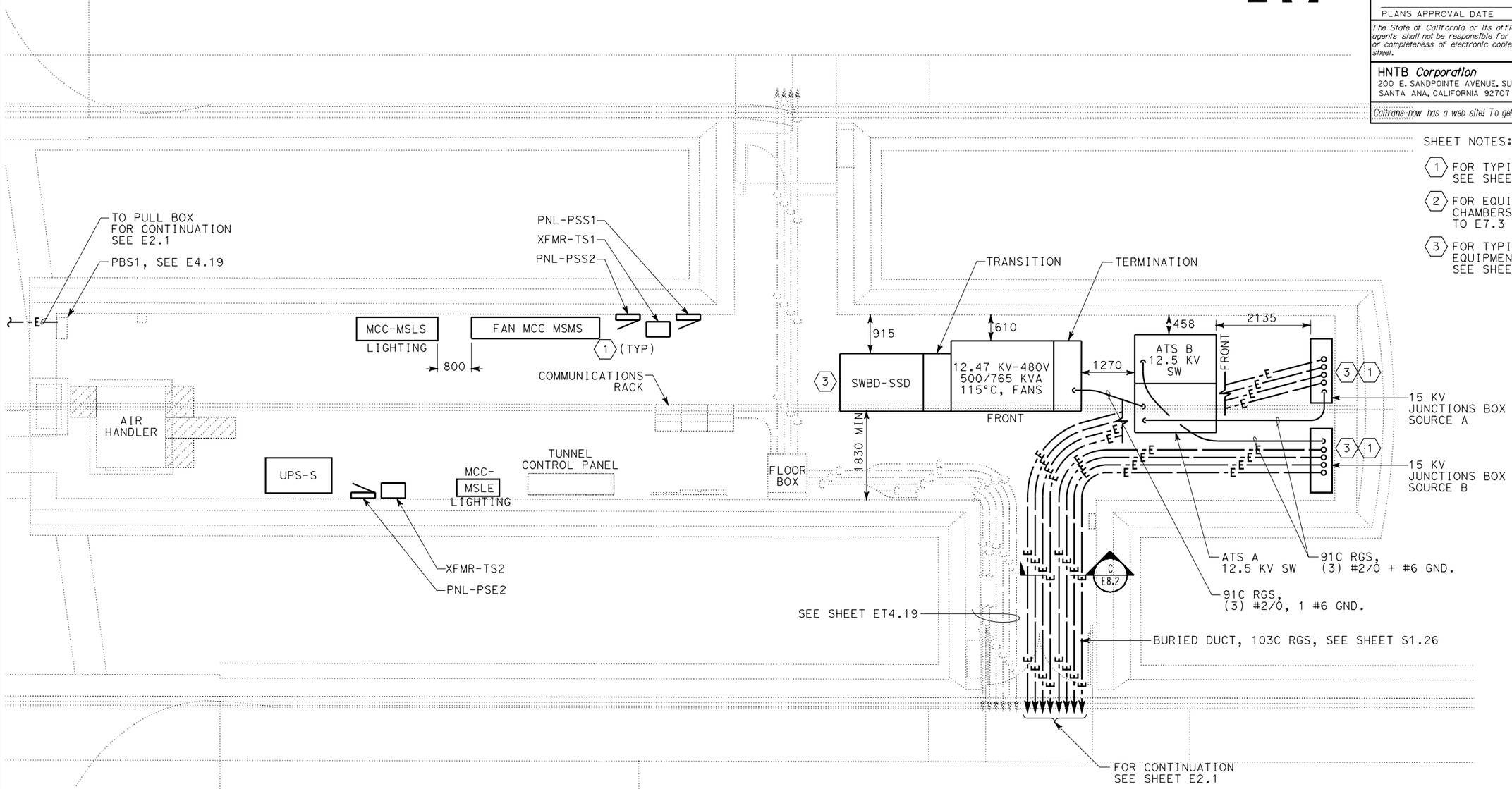

1 SOUTH EQUIPMENT CHAMBER UTILITY & EQUIPMENT PLAN

PS&E SUBMITTAL (11/18/05)
NOT FOR CONSTRUCTION

ALL DIMENSIONS ARE IN MILLIMETERS UNLESS OTHERWISE SHOWN

SOUTH EQUIPMENT CHAMBER UTILITY AND EQUIPMENT PLAN

SCALE 1:50

E2.19

STATE OF CALIFORNIA - DEPARTMENT OF TRANSPORTATION
Caltrans
ELECTRICAL

DESIGN OVERSIGHT: BEHZAD GOLEMOHAMMADI

CALCULATED/DESIGNED BY: P. WHOBREY
CHECKED BY: M. MAUNG
DATE: 9/30/05
REVISED BY
DATE REVISED

LAST REVISION 00-00-00
DATE PLOTTED => 09-NOV-2005
TIME PLOTTED => 15:06

RELATIVE BORDER SCALE IS IN MILLIMETERS 0 20 40 60 80

USERNAME => lGraham
DGN FILE => 41123uza031.dgn

CU 04240

EA 1123U1

DIST	COUNTY	ROUTE	KILOMETER POST TOTAL PROJECT	SHEET No	TOTAL SHEETS
04	SM	1			

Min Maung 9/30/05
REGISTERED ELECTRICAL ENGINEER

PLANS APPROVAL DATE

REGISTERED PROFESSIONAL ENGINEER MIN MAUNG No. E012210 Exp. 09/30/06 ELECT STATE OF CALIFORNIA

The State of California or its officers or agents shall not be responsible for the accuracy or completeness of electronic copies of this plan sheet.

HNTB *Corporation*
200 E. SANDPOINTE AVENUE, SUITE 200
SANTA ANA, CALIFORNIA 92707

Caltrans now has a web site! To get to the web site, go to: http://www.dot.ca.gov

SHEET NOTES:

(1) INSTALL CONDUITS ABOVE DRAIN PIPE.

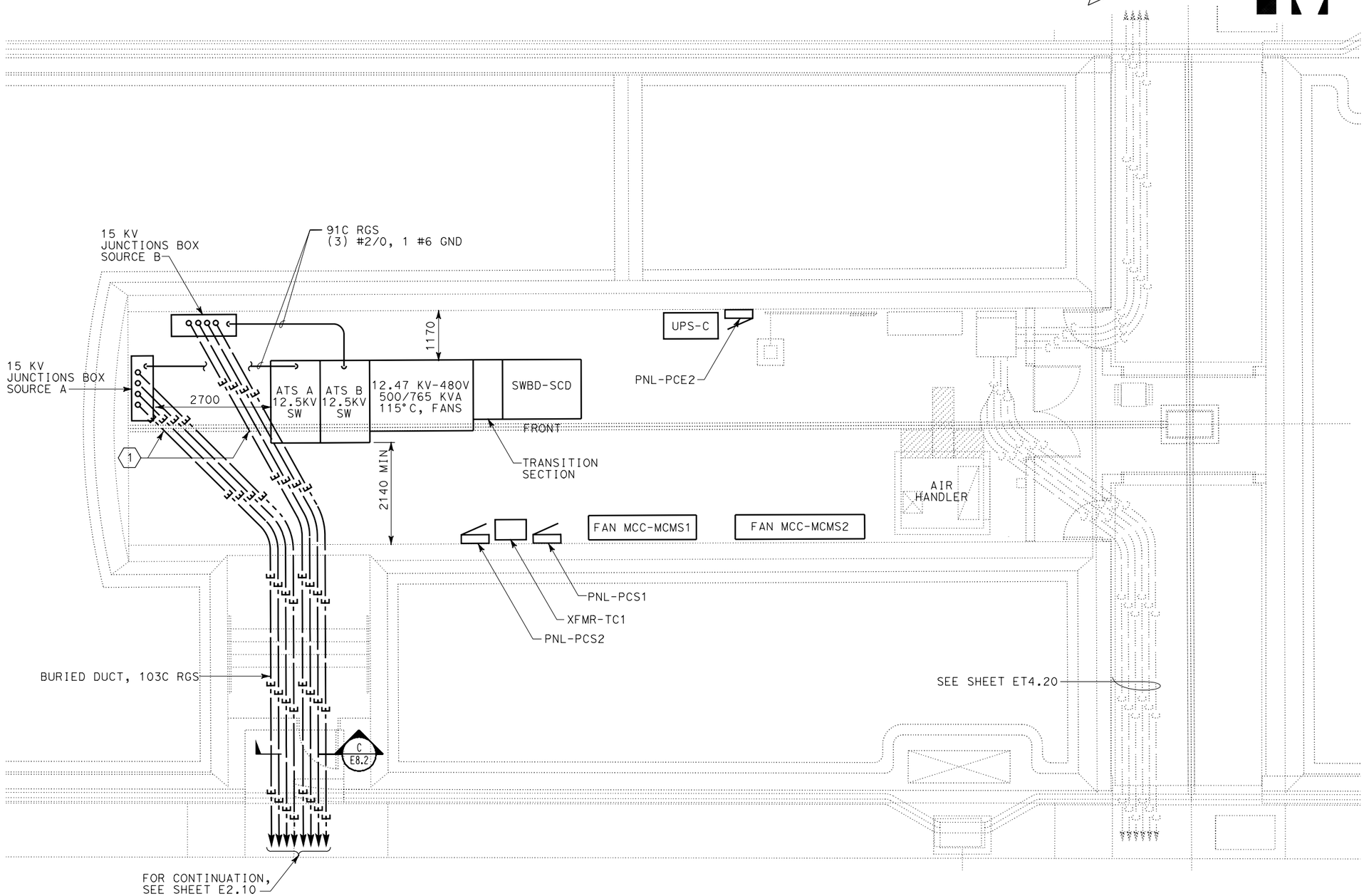

(1) CENTER EQUIPMENT CHAMBER UTILITY & EQUIPMENT PLAN

PS&E SUBMITTAL (11/18/05)
NOT FOR CONSTRUCTION

ALL DIMENSIONS ARE IN MILLIMETERS UNLESS OTHERWISE SHOWN

CENTER EQUIPMENT CHAMBER UTILITY AND EQUIPMENT PLAN

SCALE 1:50

E2.20

STATE OF CALIFORNIA - DEPARTMENT OF TRANSPORTATION	DESIGN OVERSIGHT	CALCULATED/DESIGNED BY	REVISED BY
Caltrans	BEHZAD GOLEMOHAMMADI	P. WHOBREY	DATE
ELECTRICAL		M. MAUNG	9/30/05
		CHECKED BY	DATE REVISED

LAST REVISION 00-00-00 | DATE PLOTTED => 09-NOV-2005 TIME PLOTTED => 15:06

RELATIVE BORDER SCALE IS IN MILLIMETERS 0 20 40 60 80

USERNAME => lGraham
DGN FILE => 41123uza032.dgn

CU 04240 | EA 1123U1

DIST	COUNTY	ROUTE	KILOMETER POST TOTAL PROJECT	SHEET No	TOTAL SHEETS
04	SM	1			

Min Maung 9/30/05
REGISTERED ELECTRICAL ENGINEER

PLANS APPROVAL DATE

REGISTERED PROFESSIONAL ENGINEER MIN MAUNG No. E012210 Exp. 09/30/06 ELECT STATE OF CALIFORNIA

The State of California or its officers or agents shall not be responsible for the accuracy or completeness of electronic copies of this plan sheet.

HNTB *Corporation*
200 E. SANDPOINTE AVENUE, SUITE 200
SANTA ANA, CALIFORNIA 92707

Caltrans now has a web site! To get to the web site, go to: http://www.dot.ca.gov

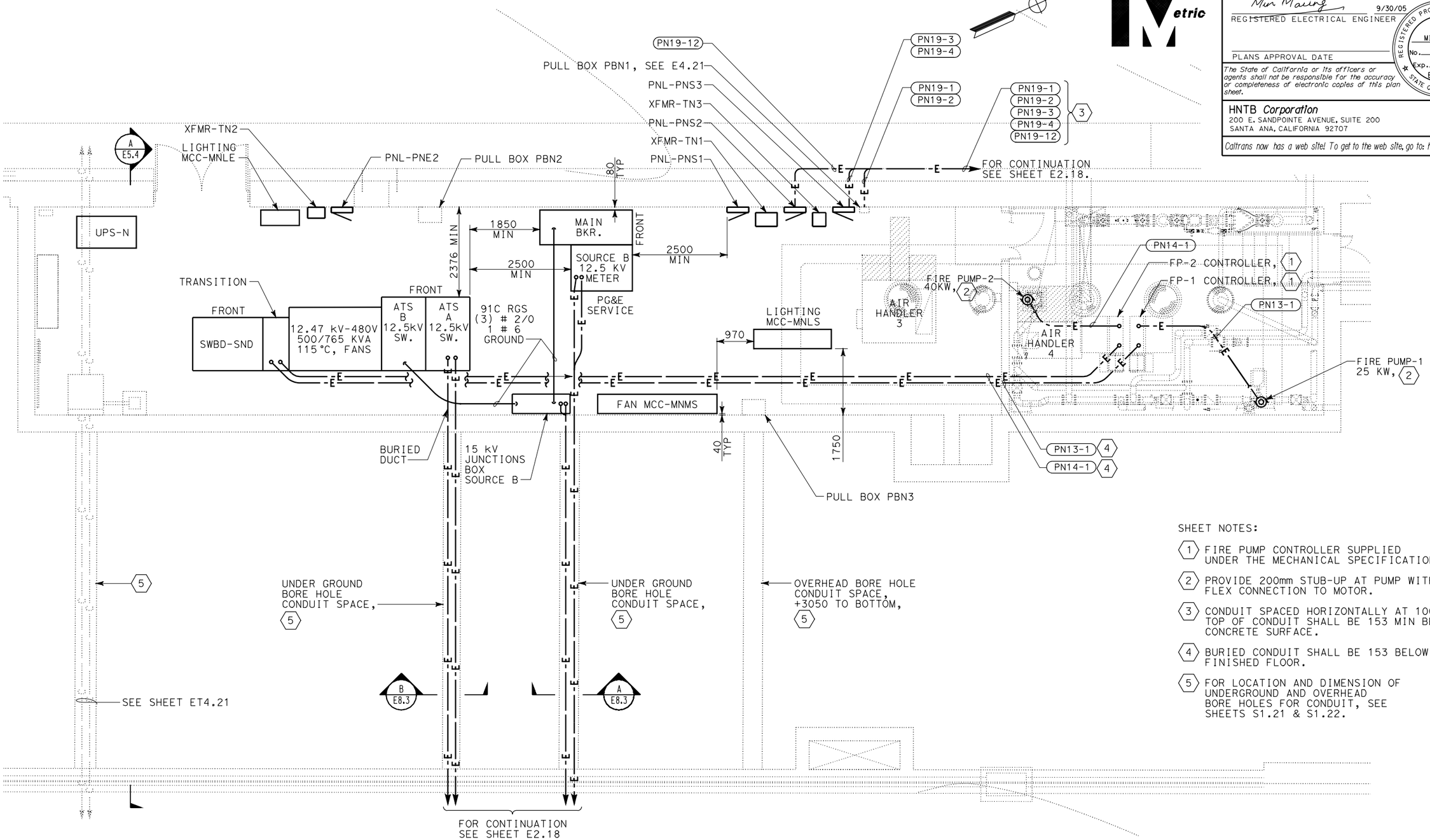

SHEET NOTES:

1. FIRE PUMP CONTROLLER SUPPLIED UNDER THE MECHANICAL SPECIFICATIONS.
2. PROVIDE 200mm STUB-UP AT PUMP WITH FLEX CONNECTION TO MOTOR.
3. CONDUIT SPACED HORIZONTALLY AT 100 OC. TOP OF CONDUIT SHALL BE 153 MIN BELOW CONCRETE SURFACE.
4. BURIED CONDUIT SHALL BE 153 BELOW FINISHED FLOOR.
5. FOR LOCATION AND DIMENSION OF UNDERGROUND AND OVERHEAD BORE HOLES FOR CONDUIT, SEE SHEETS S1.21 & S1.22.

1 NORTH EQUIPMENT CHAMBER UTILITY & EQUIPMENT PLAN

PS&E SUBMITTAL (11/18/05)
NOT FOR CONSTRUCTION

ALL DIMENSIONS ARE IN MILLIMETERS UNLESS OTHERWISE SHOWN

NORTH EQUIPMENT CHAMBER UTILITY AND EQUIPMENT PLAN

SCALE 1:50

E2.21

	DATE	REVISED BY	DATE REVISED

CALCULATED/DESIGNED BY: P. WHOBREY
CHECKED BY: M. MAUNG
DESIGN OVERSIGHT: BEHZAD GOLEMOHAMMADI

STATE OF CALIFORNIA - DEPARTMENT OF TRANSPORTATION
Caltrans
ELECTRICAL

LAST REVISION 00-00-00
DATE PLOTTED => 09-NOV-2005
TIME PLOTTED => 15:06

RELATIVE BORDER SCALE IS IN MILLIMETERS 0 20 40 60 80

USERNAME => lGraham
DGN FILE => 41123uza033.dgn

CU 04240
EA 1123U1

DIST	COUNTY	ROUTE	KILOMETER POST TOTAL PROJECT	SHEET No	TOTAL SHEETS
04	SM	1			

Min Maung 9/30/05
REGISTERED ELECTRICAL ENGINEER

PLANS APPROVAL DATE

REGISTERED PROFESSIONAL ENGINEER MIN MAUNG No. E012210 Exp. 09/30/06 ELECT STATE OF CALIFORNIA

The State of California or its officers or agents shall not be responsible for the accuracy or completeness of electronic copies of this plan sheet.

HNTB *Corporation*
200 E. SANDPOINTE AVENUE, SUITE 200
SANTA ANA, CALIFORNIA 92707

Caltrans now has a web site! To get to the web site, go to: http://www.dot.ca.gov

Caltrans Metric

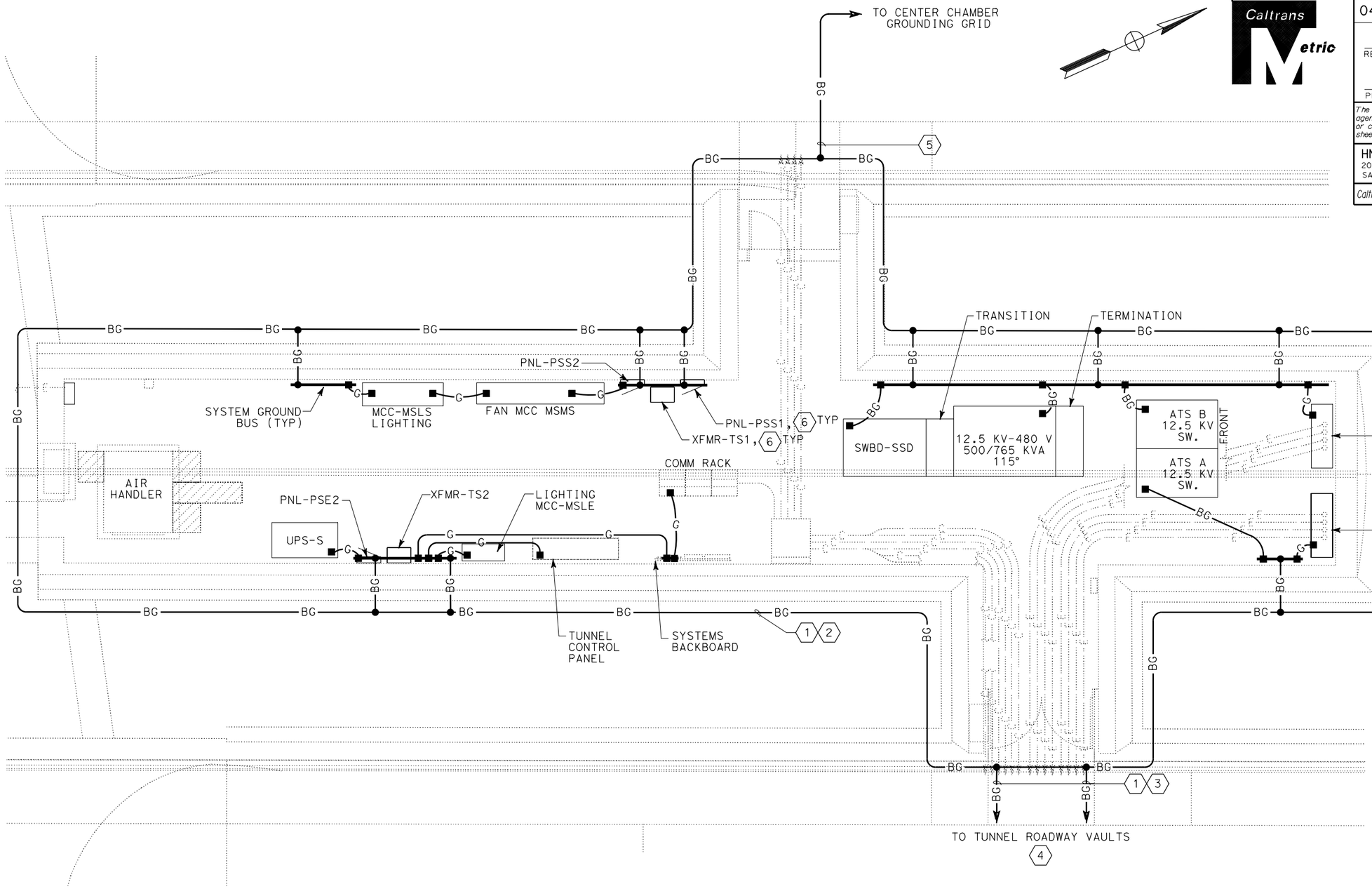

1 SOUTH EQUIPMENT CHAMBER GROUNDING PLAN

SHEET NOTES:

1. ALL LOOP AND RISERS TO BE 2/0 BC.
2. INSTALL LOOP IN INITIAL LINING AT BOTTOM PERIMETER OF CHAMBER BORE, OUTSIDE OF WATER-PROOFING SYSTEM.
3. INSTALL DUCT BANK GROUND IN SAME TRENCH AS DUCTS.
4. LOOP 2/0 BC IN EACH ROADWAY MV VAULT.
5. INSTALL #1 BC GROUND WIRE IN THE SOUTH BOUND TUNNEL NEXT TO WATER PIPE AS SHOWN ON SHEET E5.1.
6. GROUNDING CONNECTION OF PANELBOARD AND XFMR ARE NOT SHOWN FOR CLARITY. FOR GROUNDING RISER DIAGRAM, REFER TO SHEET E6.9.

ALL DIMENSIONS ARE IN MILLIMETERS UNLESS OTHERWISE SHOWN

SOUTH EQUIPMENT CHAMBER GROUNDING PLAN

SCALE 1:50

E2.22

PS&E SUBMITTAL (11/18/05)
NOT FOR CONSTRUCTION

DATE	REVISED BY	DATE REVISED
9/30/05		

CALCULATED/DESIGNED BY: P. WHOBREY
CHECKED BY: M. MAUNG
DESIGN OVERSIGHT: BEHZAD GOLEMOHAMMADI

STATE OF CALIFORNIA - DEPARTMENT OF TRANSPORTATION
Caltrans
ELECTRICAL

LAST REVISION 00-00-00
DATE PLOTTED => 09-NOV-2005
TIME PLOTTED => 15:06

RELATIVE BORDER SCALE IS IN MILLIMETERS 0 20 40 60 80

USERNAME => lGraham
DGN FILE => 41123uza034.dgn

CU 04240

EA 1123U1

DIST	COUNTY	ROUTE	KILOMETER POST TOTAL PROJECT	SHEET No	TOTAL SHEETS
04	SM	1			

Min Maung 9/30/05
REGISTERED ELECTRICAL ENGINEER

PLANS APPROVAL DATE

REGISTERED PROFESSIONAL ENGINEER MIN MAUNG No. E012210 Exp. 09/30/06 ELECT STATE OF CALIFORNIA

The State of California or its officers or agents shall not be responsible for the accuracy or completeness of electronic copies of this plan sheet.

HNTB *Corporation*
200 E. SANDPOINTE AVENUE, SUITE 200
SANTA ANA, CALIFORNIA 92707

Caltrans now has a web site! To get to the web site, go to: http://www.dot.ca.gov

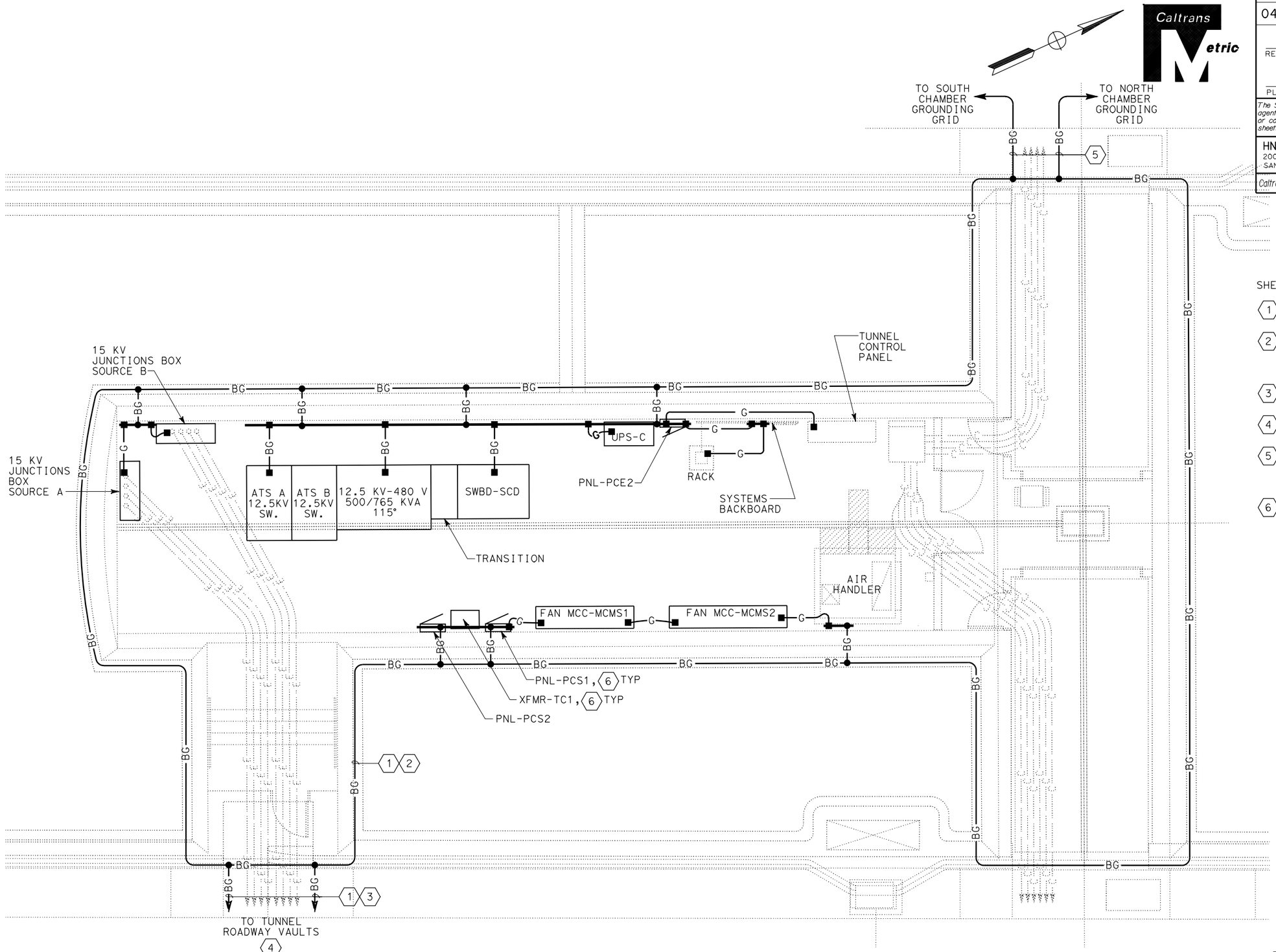

SHEET NOTES:

1. ALL LOOP AND RISERS TO BE 2/0 BC.
2. INSTALL LOOP IN INITIAL LINING AT BOTTOM PERIMETER OF CHAMBER BORE, OUTSIDE OF WATER-PROOFING SYSTEM.
3. INSTALL DUCT BANK GROUND IN SAME TRENCH AS DUCTS.
4. LOOP 2/0 BC IN EACH ROADWAY MV VAULT.
5. INSTALL #1 BC GROUND WIRE IN THE SOUTH BOUND TUNNEL NEXT TO WATER PIPE AS SHOWN ON SHEET E5.1.
6. GROUNDING CONNECTION OF PANELBOARD AND XFMR ARE NOT SHOWN FOR CLARITY. FOR GROUNDING RISER DIAGRAM, REFER TO SHEET E6.9.

1 CENTER EQUIPMENT CHAMBER GROUNDING PLAN

PS&E SUBMITTAL (11/18/05)
NOT FOR CONSTRUCTION

ALL DIMENSIONS ARE IN MILLIMETERS UNLESS OTHERWISE SHOWN

CENTER EQUIPMENT CHAMBER GROUNDING PLAN

SCALE 1:50

E2.23

STATE OF CALIFORNIA - DEPARTMENT OF TRANSPORTATION
Caltrans
ELECTRICAL

DESIGN OVERSIGHT: BEHZAD GOLEMOHAMMADI
CALCULATED/DESIGNED BY: P. WHOBREY
CHECKED BY: M. MAUNG
DATE: 9/30/05
REVISED BY
DATE REVISED

LAST REVISION 00-00-00
DATE PLOTTED => 09-NOV-2005
TIME PLOTTED => 15:06

RELATIVE BORDER SCALE IS IN MILLIMETERS 0 20 40 60 80
USERNAME => lGraham
DGN FILE => 41123uza035.dgn
CU 04240
EA 1123U1

DIST	COUNTY	ROUTE	KILOMETER POST TOTAL PROJECT	SHEET No	TOTAL SHEETS
04	SM	1			

Min Maung 9/30/05
REGISTERED ELECTRICAL ENGINEER

PLANS APPROVAL DATE

REGISTERED PROFESSIONAL ENGINEER MIN MAUNG No. E012210 Exp. 09/30/06 ELECT STATE OF CALIFORNIA

The State of California or its officers or agents shall not be responsible for the accuracy or completeness of electronic copies of this plan sheet.

HNTB *Corporation*
200 E. SANDPOINTE AVENUE, SUITE 200
SANTA ANA, CALIFORNIA 92707

Caltrans now has a web site! To get to the web site, go to: http://www.dot.ca.gov

Caltrans Metric

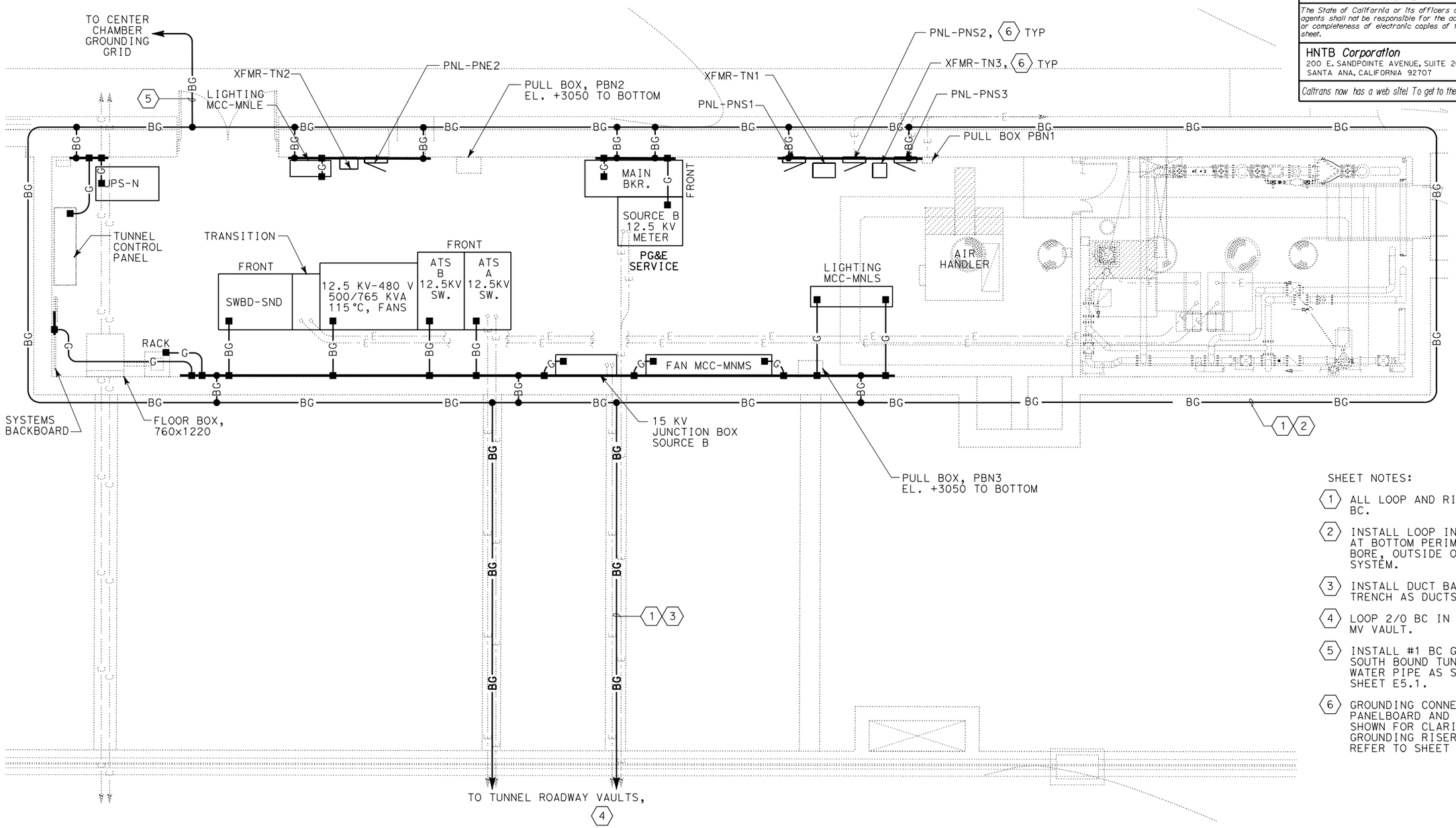

1 NORTH EQUIPMENT CHAMBER GROUNDING PLAN

SHEET NOTES:

1. ALL LOOP AND RISERS TO BE 2/0 BC.
2. INSTALL LOOP IN INITIAL LINING AT BOTTOM PERIMETER OF CHAMBER BORE, OUTSIDE OF WATER-PROOFING SYSTEM.
3. INSTALL DUCT BANK GROUND IN SAME TRENCH AS DUCTS.
4. LOOP 2/0 BC IN EACH ROADWAY MV VAULT.
5. INSTALL #1 BC GROUND WIRE IN THE SOUTH BOUND TUNNEL NEXT TO WATER PIPE AS SHOWN ON SHEET E5.1.
6. GROUNDING CONNECTION OF PANELBOARD AND XFMR ARE NOT SHOWN FOR CLARITY. FOR GROUNDING RISER DIAGRAM, REFER TO SHEET E6.9.

PS&E SUBMITTAL (11/18/05)
NOT FOR CONSTRUCTION

ALL DIMENSIONS ARE IN MILLIMETERS UNLESS OTHERWISE SHOWN

NORTH EQUIPMENT CHAMBER GROUNDING PLAN

SCALE 1:50

E2.24

DATE	REVISED BY	DATE REVISED
9/30/05		

CALCULATED/DESIGNED BY: P. WHOBREY
CHECKED BY: M. MAUNG
DESIGN OVERSIGHT: BEHZAD GOLEMOHAMMADI

STATE OF CALIFORNIA - DEPARTMENT OF TRANSPORTATION
Caltrans
ELECTRICAL

LAST REVISION 00-00-00
DATE PLOTTED => 09-NOV-2005
TIME PLOTTED => 15:06

RELATIVE BORDER SCALE IS IN MILLIMETERS 0 20 40 60 80

USERNAME => lGraham
DGN FILE => 41123uza036.dgn

CU 04240
EA 1123U1

DIST	COUNTY	ROUTE	KILOMETER POST TOTAL PROJECT	SHEET No	TOTAL SHEETS
04	SM	1			

Min Maung 9/30/05
REGISTERED ELECTRICAL ENGINEER

PLANS APPROVAL DATE

REGISTERED PROFESSIONAL ENGINEER
MIN MAUNG
No. E012210
Exp. 09/30/06
ELECT
STATE OF CALIFORNIA

The State of California or its officers or agents shall not be responsible for the accuracy or completeness of electronic copies of this plan sheet.

HNTB *Corporation*
200 E. SANDPOINTE AVENUE, SUITE 200
SANTA ANA, CALIFORNIA 92707

Caltrans now has a web site! To get to the web site, go to: http://www.dot.ca.gov

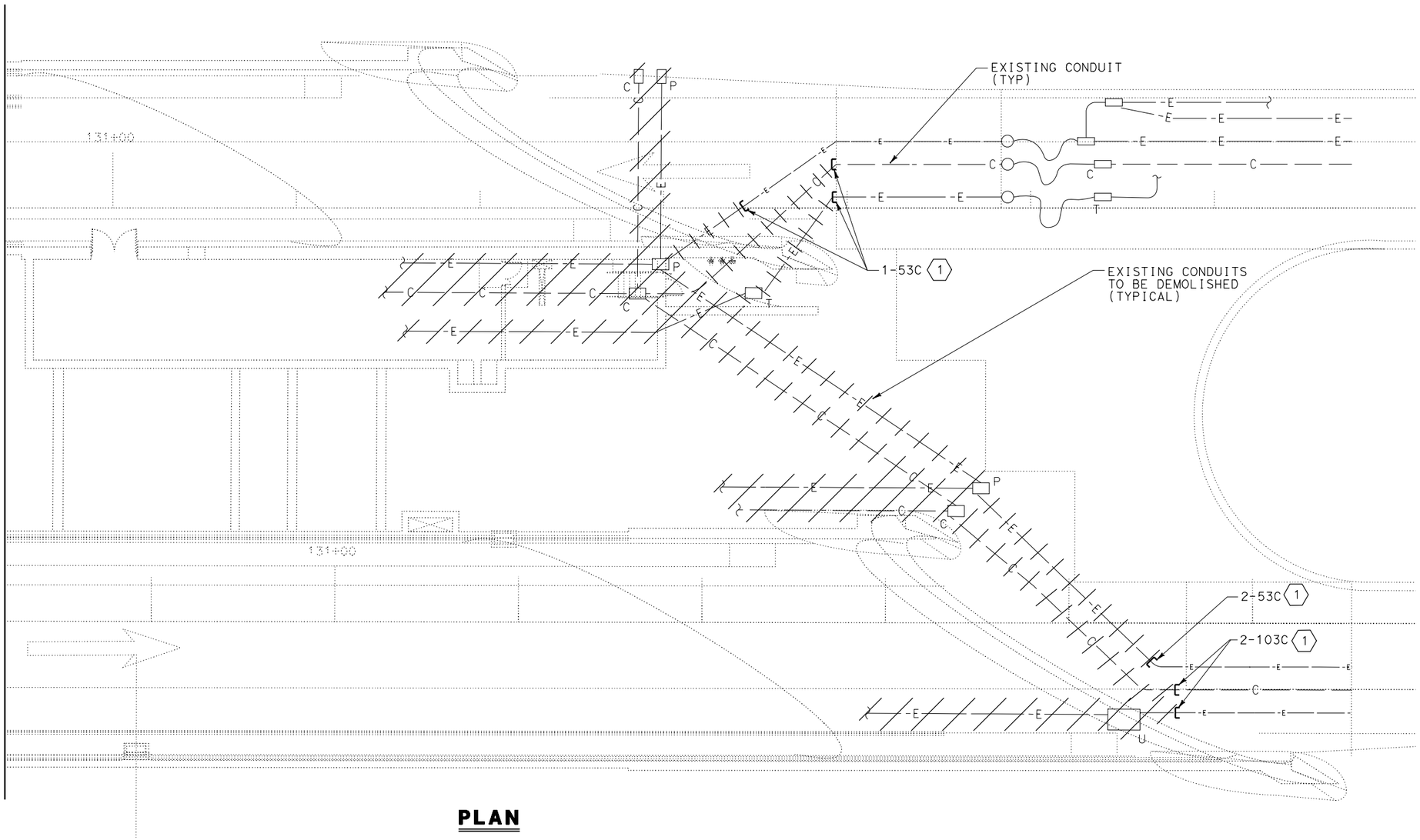

PLAN

SHEET NOTES:

1. PROVIDE CAPPED STUB-OUTS FOR ALL CONDUIT AS SHOWN. DEMOLISH ALL DUCTS AND HAND HOLES TO SOUTH AS SHOWN. ELECTRICAL CONTRACTOR SHALL BE RESPONSIBLE FOR CLEANUP AND PROPER DISPOSAL OF DEMOLISHED CONDUIT. PROVIDE ENOUGH LENGTH FOR COUPLING WHEN CUTTING CONDUIT.

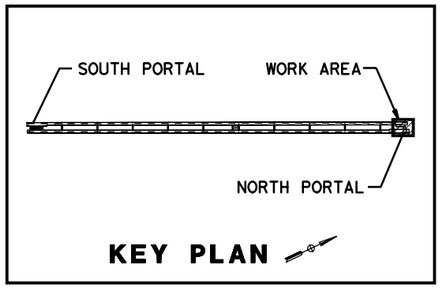

KEY PLAN

ALL DIMENSIONS ARE IN MILLIMETERS UNLESS OTHERWISE SHOWN

NORTH PORTAL DEMOLITION PLAN

SCALE 1:125

E2.25

PS&E SUBMITTAL (11/18/05)
NOT FOR CONSTRUCTION

STATE OF CALIFORNIA - DEPARTMENT OF TRANSPORTATION
Caltrans
ELECTRICAL

DESIGN OVERSIGHT: BEHZAD GOLEMOHAMMADI
CALCULATED/DESIGNED BY: P. WHOBREY
CHECKED BY: M. MAUNG
DATE: 9/30/05
REVISED BY
DATE REVISED

LAST REVISION 00-00-00
DATE PLOTTED => 09-NOV-2005
TIME PLOTTED => 15:07

RELATIVE BORDER SCALE IS IN MILLIMETERS 0 20 40 60 80

USERNAME => lGraham
DGN FILE => 41123uza037.dgn

CU 04240

EA 1123U1

DIST	COUNTY	ROUTE	KILOMETER POST TOTAL PROJECT	SHEET No	TOTAL SHEETS
04	SM	1			

Min Maung 9/30/05
REGISTERED ELECTRICAL ENGINEER

PLANS APPROVAL DATE

REGISTERED PROFESSIONAL ENGINEER MIN MAUNG No. E012210 Exp. 09/30/06 ELECT STATE OF CALIFORNIA

The State of California or its officers or agents shall not be responsible for the accuracy or completeness of electronic copies of this plan sheet.

HNTB *Corporation*
200 E. SANDPOINTE AVENUE, SUITE 200
SANTA ANA, CALIFORNIA 92707

Caltrans now has a web site! To get to the web site, go to: http://www.dot.ca.gov

Caltrans Metric

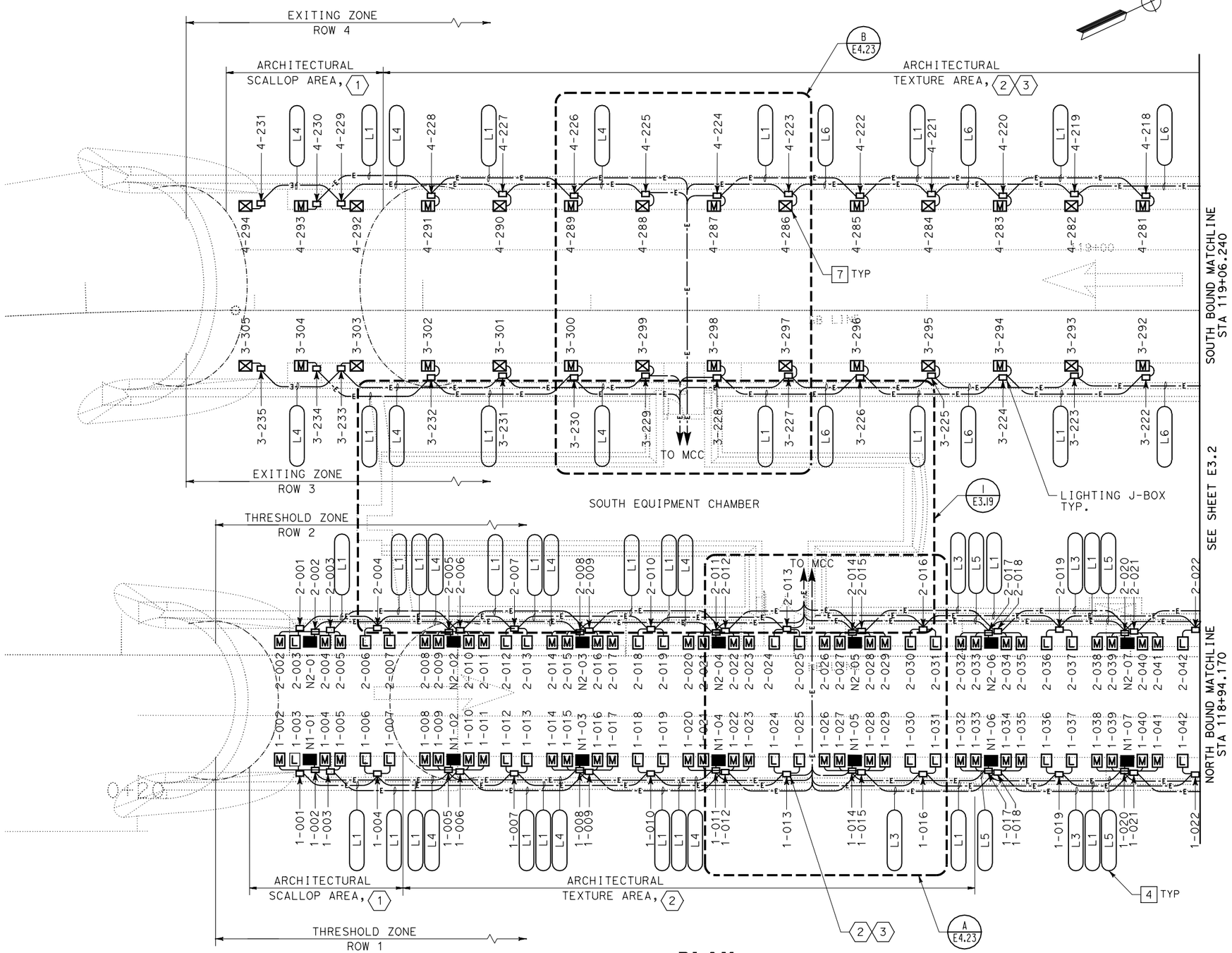

PLAN

SHEET NOTES:

1. SEE E8.17 FOR INSTALLATION DETAILS.
2. SEE E8.18 FOR INSTALLATION DETAILS.
3. FOR SIMPLICITY, THE J-BOXES ARE NOT SHOWN AT ACTUAL LOCATION. SEE SHEETS E10.1 THROUGH E10.4 FOR EXACT LOCATION.

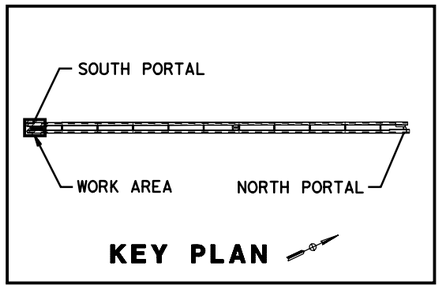

ALL DIMENSIONS ARE IN MILLIMETERS UNLESS OTHERWISE SHOWN

TUNNEL LIGHTING PLAN NO. 1

SCALE 1:125

E3.1

PS&E SUBMITTAL (11/18/05)
NOT FOR CONSTRUCTION

CALCULATED/DESIGNED BY	A. GOROVAYA	REVISED BY	DATE
CHECKED BY	M. MAUNG	DATE REVISED	9/30/05
DESIGN OVERSIGHT	BEHZAD GOLEMOHAMMADI		

STATE OF CALIFORNIA - DEPARTMENT OF TRANSPORTATION
Caltrans
ELECTRICAL

LAST REVISION 00-00-00 | DATE PLOTTED => 09-NOV-2005 | TIME PLOTTED => 15:07

RELATIVE BORDER SCALE IS IN MILLIMETERS 0 20 40 60 80

USERNAME => lGraham
DGN FILE => 41123uza038.dgn

CU 04240 | EA 1123U1

DIST	COUNTY	ROUTE	KILOMETER POST TOTAL PROJECT	SHEET No	TOTAL SHEETS
04	SM	1			

Min Maung 9/30/05
REGISTERED ELECTRICAL ENGINEER

PLANS APPROVAL DATE

REGISTERED PROFESSIONAL ENGINEER
MIN MAUNG
No. E012210
Exp. 09/30/06
ELECT
STATE OF CALIFORNIA

The State of California or its officers or agents shall not be responsible for the accuracy or completeness of electronic copies of this plan sheet.

HNTB *Corporation*
200 E. SANDPOINTE AVENUE, SUITE 200
SANTA ANA, CALIFORNIA 92707

Caltrans now has a web site! To get to the web site, go to: http://www.dot.ca.gov

Caltrans Metric

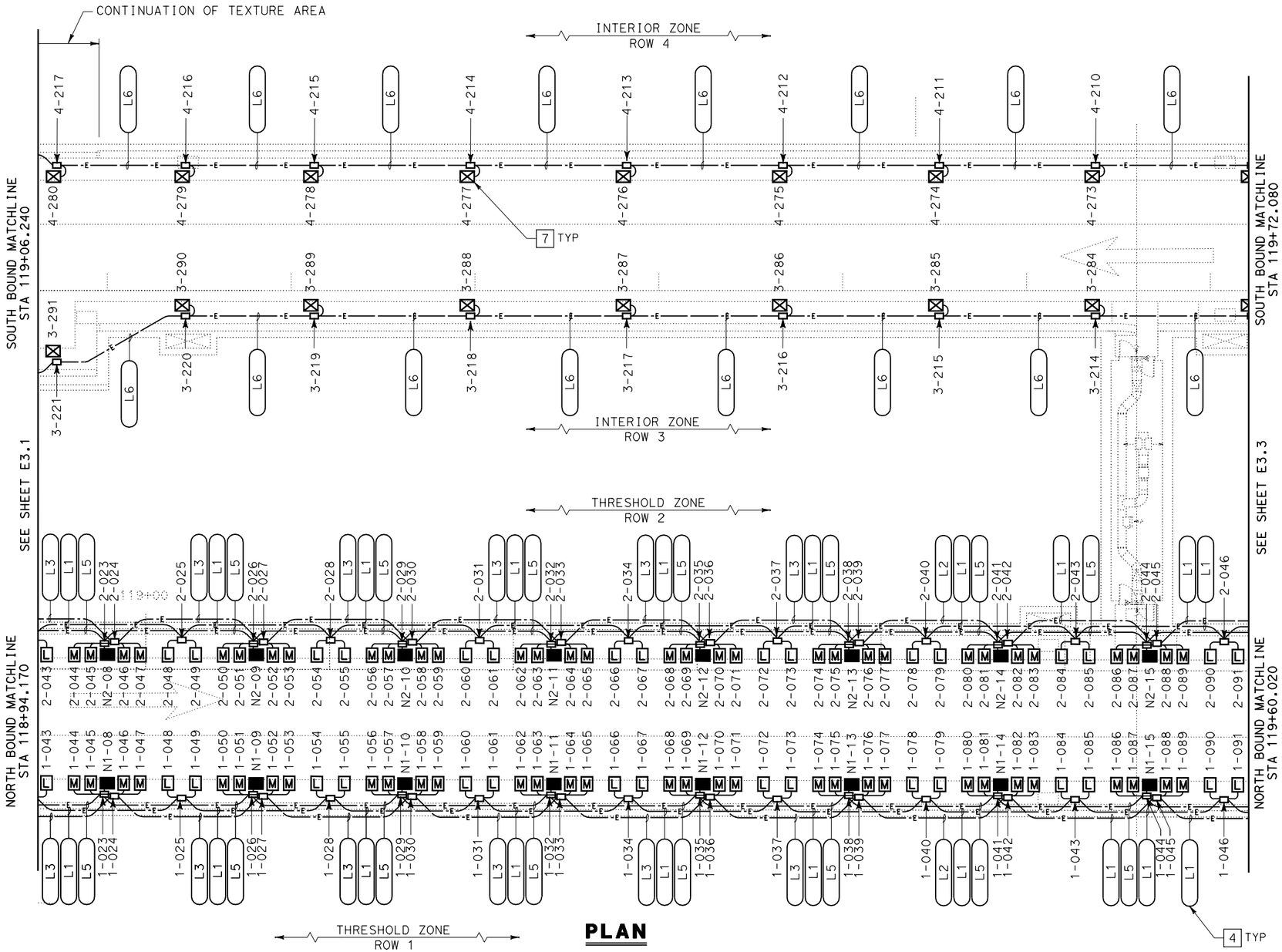

PLAN

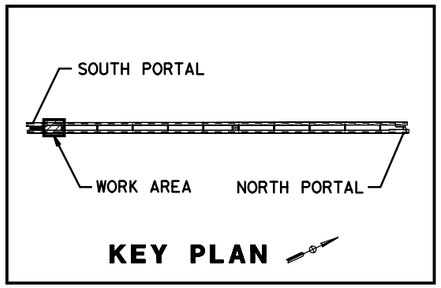

KEY PLAN

ALL DIMENSIONS ARE IN MILLIMETERS UNLESS OTHERWISE SHOWN

TUNNEL LIGHTING PLAN NO. 2

SCALE 1:125

E3.2

PS&E SUBMITTAL (11/18/05)
NOT FOR CONSTRUCTION

STATE OF CALIFORNIA - DEPARTMENT OF TRANSPORTATION
Caltrans
ELECTRICAL

DESIGN OVERSIGHT: BEHZAD GOLEMOHAMMADI
CALCULATED/DESIGNED BY: A. GOROVAYA
CHECKED BY: M. MAUNG

DATE	REVISED BY	DATE REVISED
9/30/05		

LAST REVISION 00-00-00
DATE PLOTTED => 09-NOV-2005
TIME PLOTTED => 15:07

RELATIVE BORDER SCALE IS IN MILLIMETERS 0 20 40 60 80

USERNAME => lGraham
DGN FILE => 41123uza039.dgn

CU 04240
EA 1123U1

DIST	COUNTY	ROUTE	KILOMETER POST TOTAL PROJECT	SHEET No	TOTAL SHEETS
04	SM	1			

Min Maung 9/30/05
REGISTERED ELECTRICAL ENGINEER

PLANS APPROVAL DATE

REGISTERED PROFESSIONAL ENGINEER MIN MAUNG No. E012210 Exp. 09/30/06 ELECT STATE OF CALIFORNIA

The State of California or its officers or agents shall not be responsible for the accuracy or completeness of electronic copies of this plan sheet.

HNTB *Corporation*
200 E. SANDPOINTE AVENUE, SUITE 200
SANTA ANA, CALIFORNIA 92707

Caltrans now has a web site! To get to the web site, go to: http://www.dot.ca.gov

Caltrans Metric

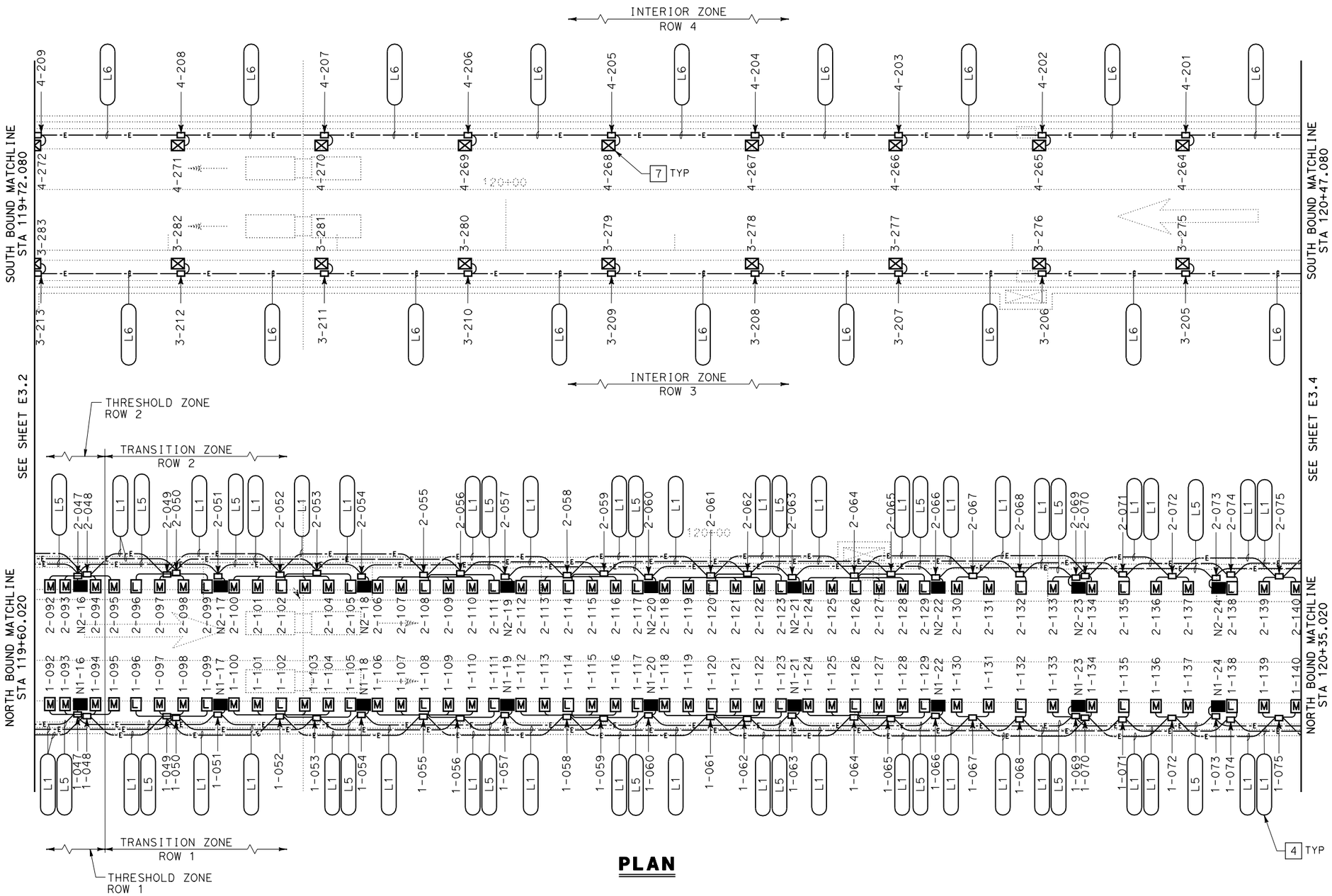

PLAN

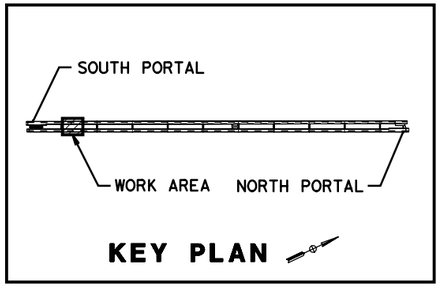

KEY PLAN

ALL DIMENSIONS ARE IN MILLIMETERS UNLESS OTHERWISE SHOWN

TUNNEL LIGHTING PLAN NO. 3

SCALE 1:125

E3.3

PS&E SUBMITTAL (11/18/05)
NOT FOR CONSTRUCTION

STATE OF CALIFORNIA - DEPARTMENT OF TRANSPORTATION
Caltrans
ELECTRICAL

DESIGN OVERSIGHT: BEHZAD GOLEMOHAMMADI

CALCULATED/DESIGNED BY: A. GOROVAYA
CHECKED BY: M. MAUNG

DATE	REVISED BY	DATE REVISED
9/30/05		

LAST REVISION 00-00-00
DATE PLOTTED => 09-NOV-2005
TIME PLOTTED => 15:07

RELATIVE BORDER SCALE IS IN MILLIMETERS 0 20 40 60 80

USERNAME => lGraham
DGN FILE => 41123uza040.dgn

CU 04240

EA 1123U1

DIST	COUNTY	ROUTE	KILOMETER POST TOTAL PROJECT	SHEET No	TOTAL SHEETS
04	SM	1			

Min Maung 9/30/05
REGISTERED ELECTRICAL ENGINEER

PLANS APPROVAL DATE

REGISTERED PROFESSIONAL ENGINEER MIN MAUNG No. E012210 Exp. 09/30/06 ELECT STATE OF CALIFORNIA

The State of California or its officers or agents shall not be responsible for the accuracy or completeness of electronic copies of this plan sheet.

HNTB *Corporation*
200 E. SANDPOINTE AVENUE, SUITE 200
SANTA ANA, CALIFORNIA 92707

Caltrans now has a web site! To get to the web site, go to: http://www.dot.ca.gov

Caltrans Metric

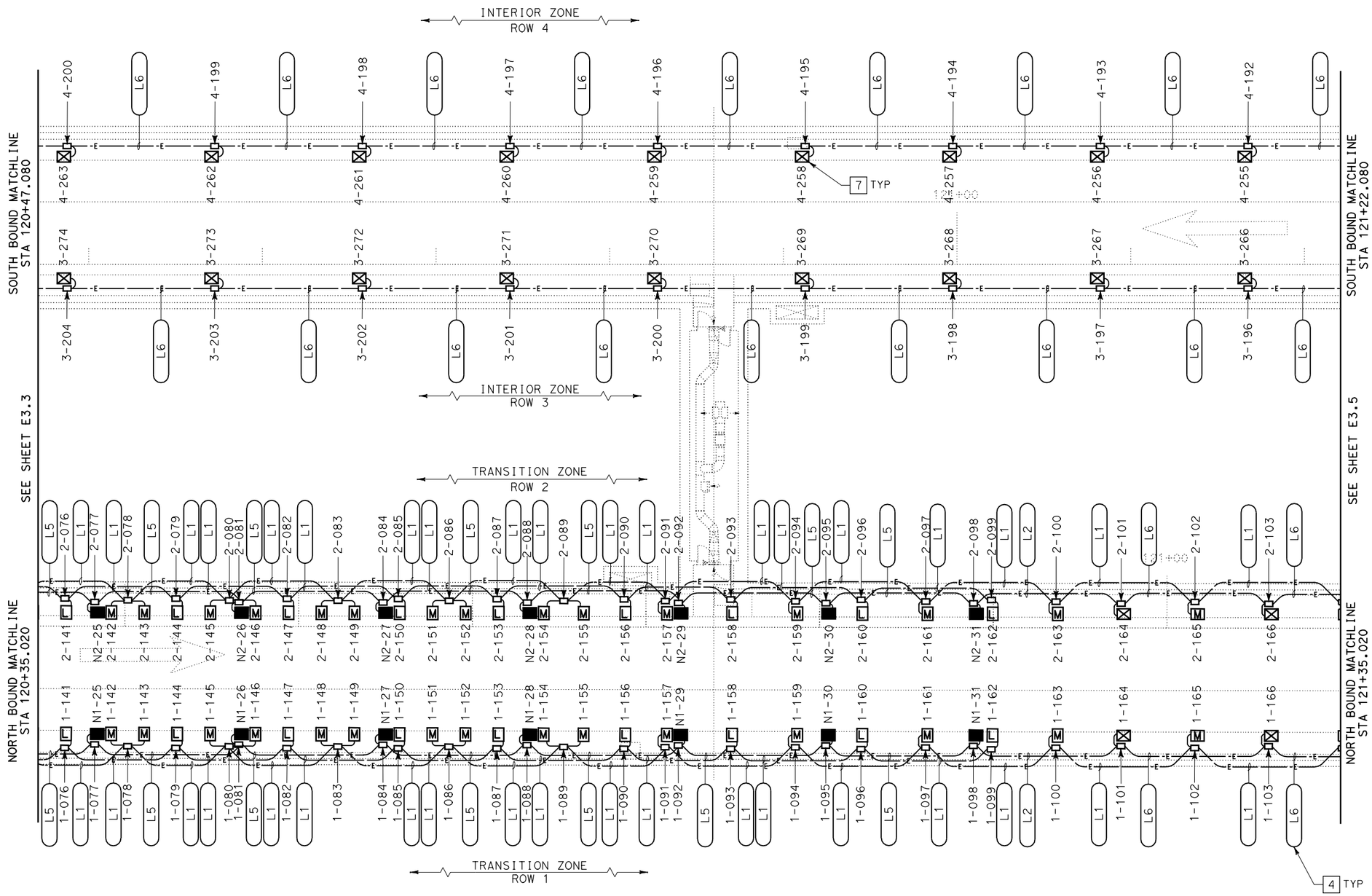

PLAN

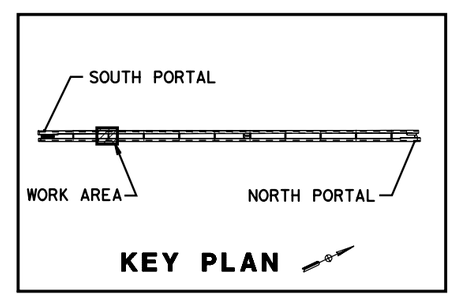

KEY PLAN

ALL DIMENSIONS ARE IN MILLIMETERS UNLESS OTHERWISE SHOWN

TUNNEL LIGHTING PLAN NO. 4

SCALE 1:125

E3.4

PS&E SUBMITTAL (11/18/05)
NOT FOR CONSTRUCTION

STATE OF CALIFORNIA - DEPARTMENT OF TRANSPORTATION
Caltrans
ELECTRICAL

DESIGN OVERSIGHT: BEHZAD GOLEMOHAMMADI
CALCULATED/DESIGNED BY: A. GOROVAYA
CHECKED BY: M. MAUNG

	DATE	REVISED BY	DATE REVISED
	9/30/05		

RELATIVE BORDER SCALE IS IN MILLIMETERS 0 20 40 60 80

USERNAME => lGraham
DGN FILE => 41123uza041.dgn

CU 04240 | EA 1123U1

LAST REVISION 00-00-00 | DATE PLOTTED => 09-NOV-2005 | TIME PLOTTED => 15:07

DIST	COUNTY	ROUTE	KILOMETER POST TOTAL PROJECT	SHEET No	TOTAL SHEETS
04	SM	1			

Min Maung 9/30/05
REGISTERED ELECTRICAL ENGINEER

PLANS APPROVAL DATE

REGISTERED PROFESSIONAL ENGINEER
MIN MAUNG
No. E012210
Exp. 09/30/06
ELECT
STATE OF CALIFORNIA

The State of California or its officers or agents shall not be responsible for the accuracy or completeness of electronic copies of this plan sheet.

HNTB *Corporation*
200 E. SANDPOINTE AVENUE, SUITE 200
SANTA ANA, CALIFORNIA 92707

Caltrans now has a web site! To get to the web site, go to: http://www.dot.ca.gov

Caltrans Metric

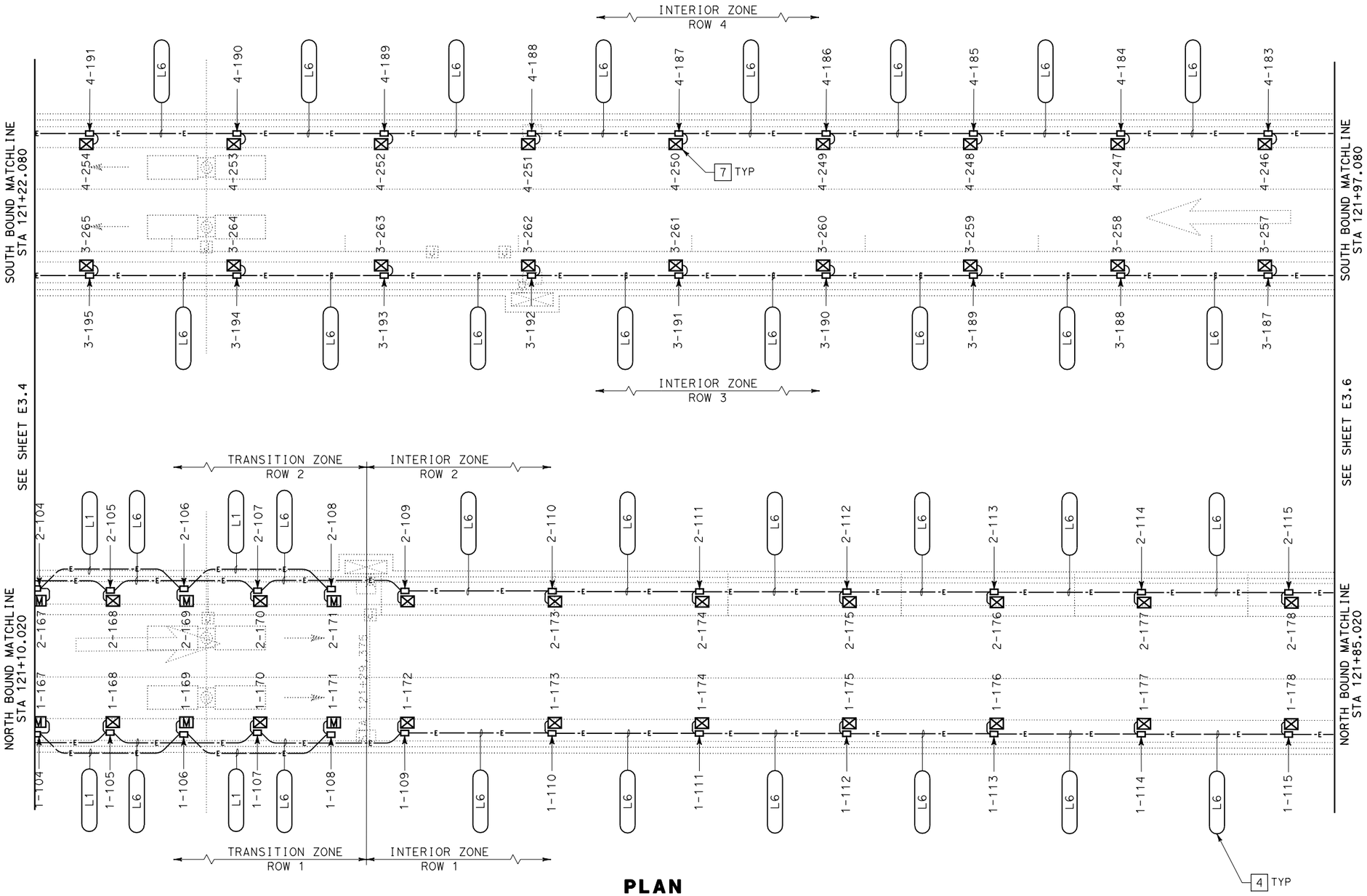

PLAN

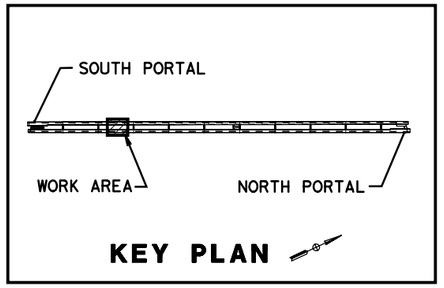

ALL DIMENSIONS ARE IN MILLIMETERS UNLESS OTHERWISE SHOWN

TUNNEL LIGHTING PLAN NO. 5

SCALE 1:125

E3.5

PS&E SUBMITTAL (11/18/05)
NOT FOR CONSTRUCTION

	DATE	REVISED BY
CALCULATED/DESIGNED BY	A. GOROVAYA	
CHECKED BY	M. MAUNG	9/30/05 DATE REVISED
DESIGN OVERSIGHT	BEHZAD GOLEMOHAMMADI	

STATE OF CALIFORNIA - DEPARTMENT OF TRANSPORTATION
Caltrans
ELECTRICAL

RELATIVE BORDER SCALE IS IN MILLIMETERS 0 20 40 60 80

USERNAME => lGraham
DGN FILE => 41123uza042.dgn

CU 04240 EA 1123U1

LAST REVISION 00-00-00 DATE PLOTTED => 09-NOV-2005 TIME PLOTTED => 15:07

DIST	COUNTY	ROUTE	KILOMETER POST TOTAL PROJECT	SHEET No	TOTAL SHEETS
04	SM	1			

Min Maung 9/30/05
REGISTERED ELECTRICAL ENGINEER

PLANS APPROVAL DATE

REGISTERED PROFESSIONAL ENGINEER
MIN MAUNG
No. E012210
Exp. 09/30/06
ELECT
STATE OF CALIFORNIA

The State of California or its officers or agents shall not be responsible for the accuracy or completeness of electronic copies of this plan sheet.

HNTB *Corporation*
200 E. SANDPOINTE AVENUE, SUITE 200
SANTA ANA, CALIFORNIA 92707

Caltrans now has a web site! To get to the web site, go to: http://www.dot.ca.gov

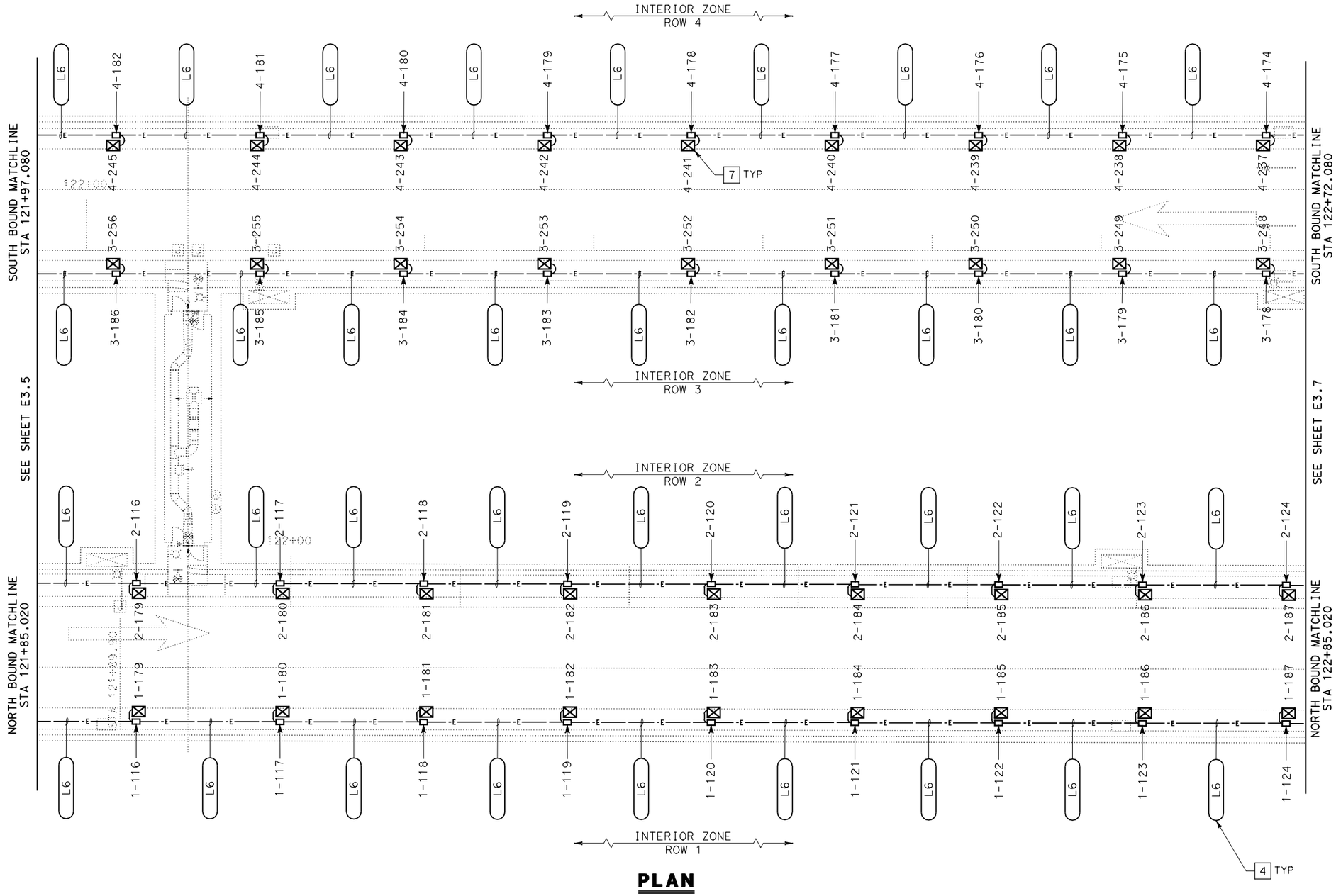

PLAN

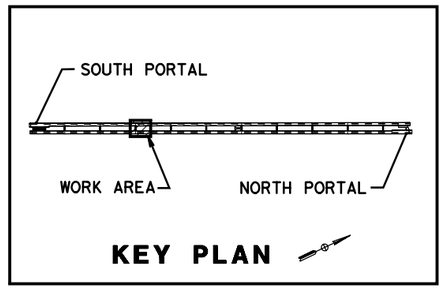

KEY PLAN

ALL DIMENSIONS ARE IN MILLIMETERS UNLESS OTHERWISE SHOWN

TUNNEL LIGHTING PLAN NO. 6

SCALE 1:125

E3.6

PS&E SUBMITTAL (11/18/05)
NOT FOR CONSTRUCTION

CALCULATED/DESIGNED BY	A. GOROVAYA	DATE	9/30/05
CHECKED BY	M. MAUNG	REVISED BY	
		DATE REVISED	

DESIGN OVERSIGHT
BEHZAD GOLEMOHAMMADI

STATE OF CALIFORNIA - DEPARTMENT OF TRANSPORTATION
Caltrans
ELECTRICAL

RELATIVE BORDER SCALE IS IN MILLIMETERS 0 20 40 60 80

USERNAME => lGraham
DGN FILE => 41123uza043.dgn

CU 04240
EA 1123U1

LAST REVISION 00-00-00
DATE PLOTTED => 09-NOV-2005
TIME PLOTTED => 15:07

DIST	COUNTY	ROUTE	KILOMETER POST TOTAL PROJECT	SHEET No	TOTAL SHEETS
04	SM	1			

Min Maung 9/30/05
REGISTERED ELECTRICAL ENGINEER

PLANS APPROVAL DATE

REGISTERED PROFESSIONAL ENGINEER MIN MAUNG No. E012210 Exp. 09/30/06 ELECT STATE OF CALIFORNIA

The State of California or its officers or agents shall not be responsible for the accuracy or completeness of electronic copies of this plan sheet.

HNTB *Corporation*
200 E. SANDPOINTE AVENUE, SUITE 200
SANTA ANA, CALIFORNIA 92707

Caltrans now has a web site! To get to the web site, go to: http://www.dot.ca.gov

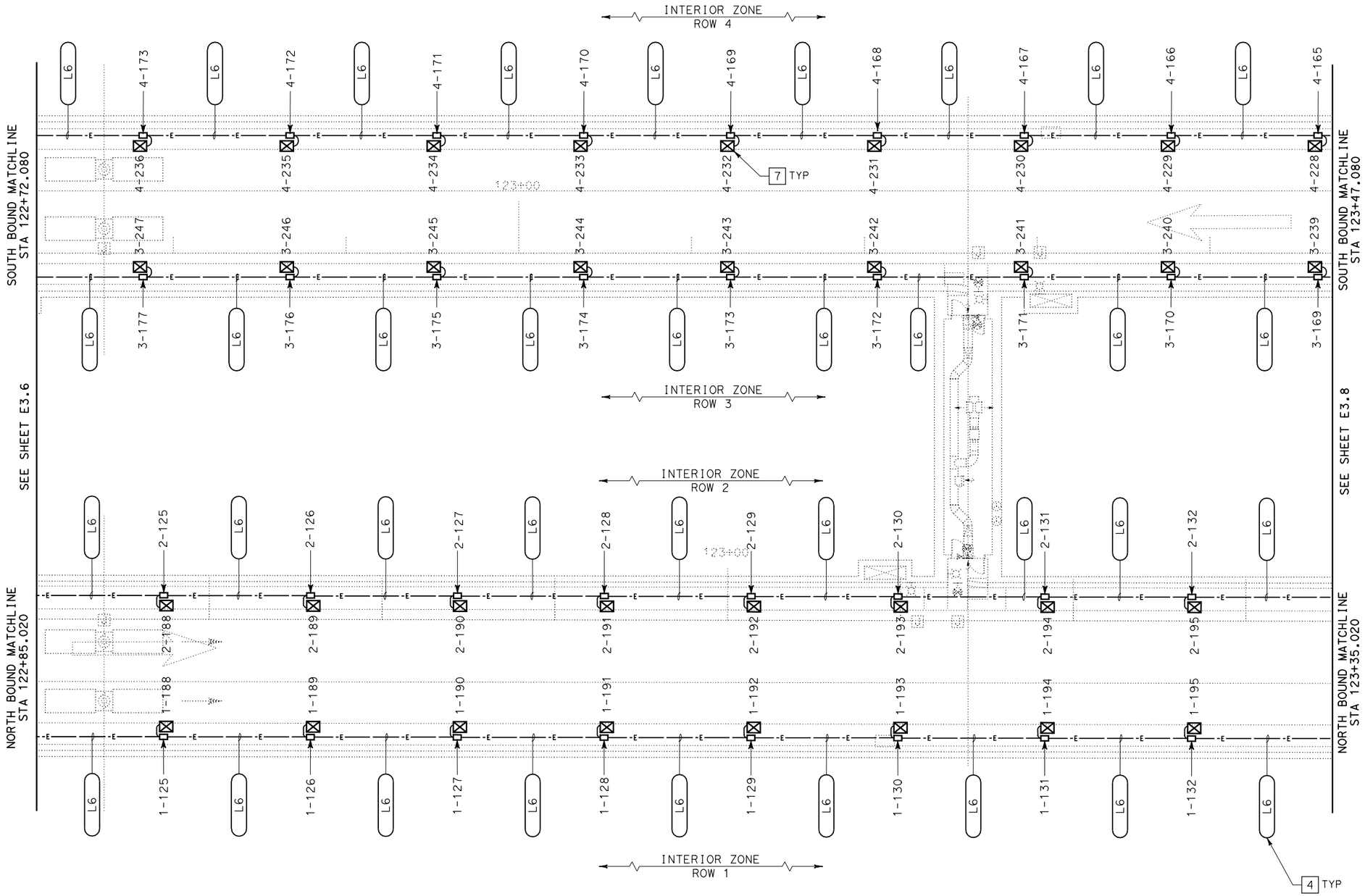

PLAN

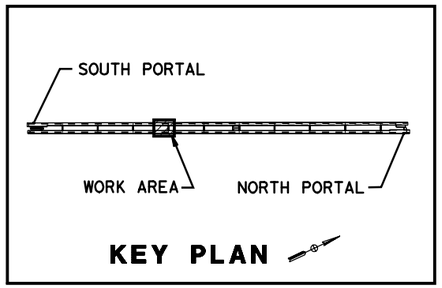

ALL DIMENSIONS ARE IN MILLIMETERS UNLESS OTHERWISE SHOWN

TUNNEL LIGHTING PLAN NO. 7

SCALE 1:125

E3.7

PS&E SUBMITTAL (11/18/05)
NOT FOR CONSTRUCTION

CALCULATED/DESIGNED BY	A. GOROVAYA	DATE	9/30/05
CHECKED BY	M. MAUNG	REVISED BY	
		DATE REVISED	

DESIGN OVERSIGHT: BEHZAD GOLEMOHAMMADI

STATE OF CALIFORNIA - DEPARTMENT OF TRANSPORTATION
Caltrans
ELECTRICAL

LAST REVISION 00-00-00
DATE PLOTTED => 09-NOV-2005
TIME PLOTTED => 15:07

RELATIVE BORDER SCALE IS IN MILLIMETERS 0 20 40 60 80

USERNAME => lGraham
DGN FILE => 41123uza044.dgn

CU 04240 | EA 1123U1

DIST	COUNTY	ROUTE	KILOMETER POST TOTAL PROJECT	SHEET No	TOTAL SHEETS
04	SM	1			

Min Maung 9/30/05
REGISTERED ELECTRICAL ENGINEER

REGISTERED PROFESSIONAL ENGINEER
MIN MAUNG
No. E012210
Exp. 09/30/06
ELECT
STATE OF CALIFORNIA

PLANS APPROVAL DATE

The State of California or its officers or agents shall not be responsible for the accuracy or completeness of electronic copies of this plan sheet.

HNTB *Corporation*
200 E. SANDPOINTE AVENUE, SUITE 200
SANTA ANA, CALIFORNIA 92707

Caltrans now has a web site! To get to the web site, go to: http://www.dot.ca.gov

Caltrans Metric

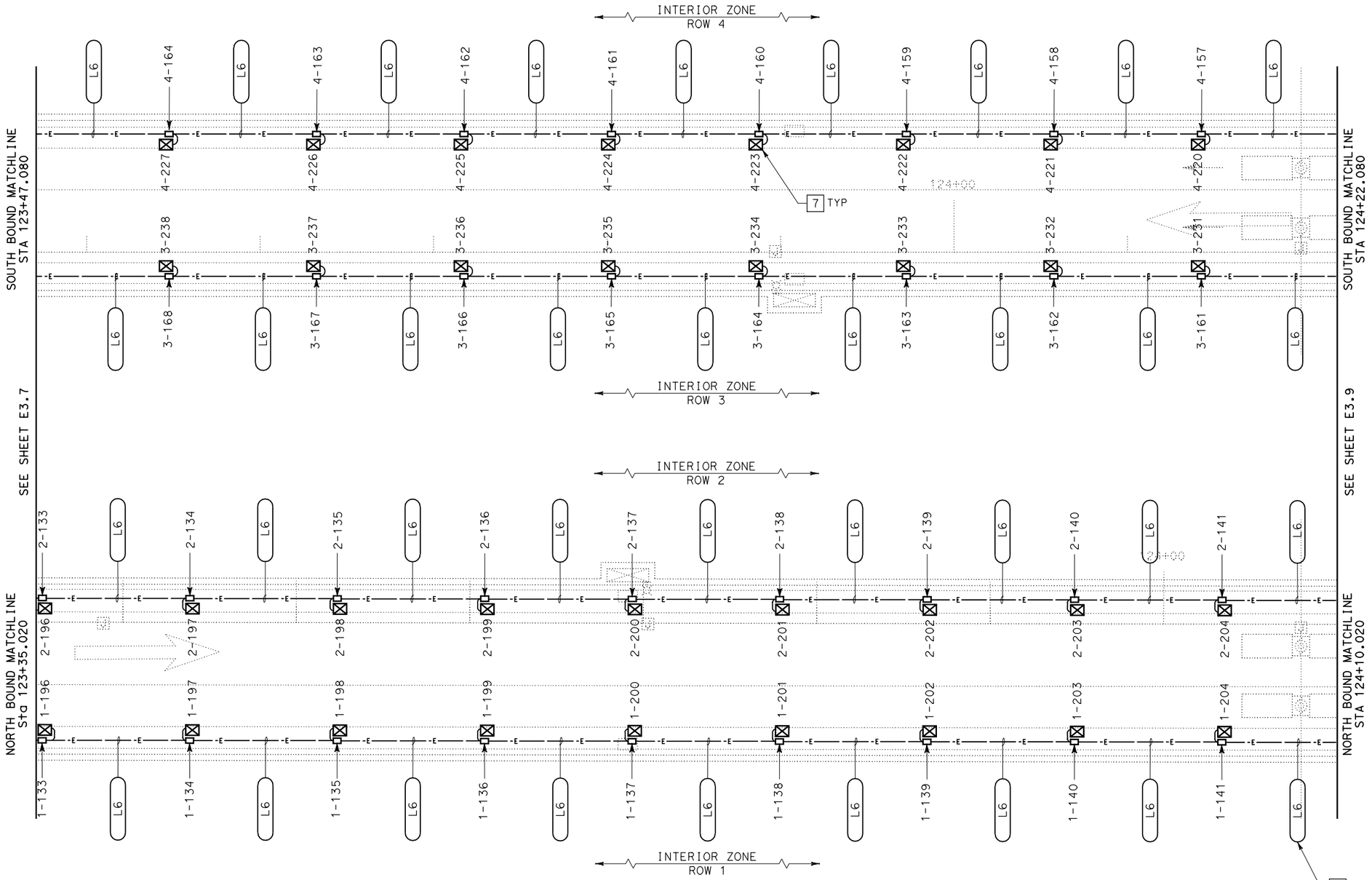

PLAN

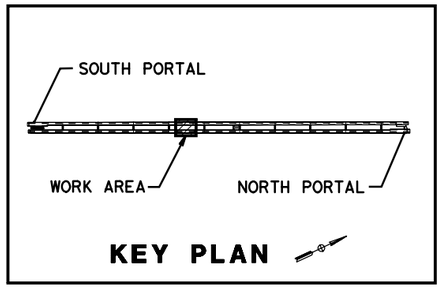

KEY PLAN

ALL DIMENSIONS ARE IN MILLIMETERS UNLESS OTHERWISE SHOWN

TUNNEL LIGHTING PLAN NO. 8

SCALE 1:125

E3.8

PS&E SUBMITTAL (11/18/05)
NOT FOR CONSTRUCTION

STATE OF CALIFORNIA - DEPARTMENT OF TRANSPORTATION	CALCULATED/DESIGNED BY A. GOROVAYA	DATE	REVISED BY
Caltrans	CHECKED BY M. MAUNG	9/30/05	DATE REVISED
ELECTRICAL	DESIGN OVERSIGHT BEHZAD GOLEMOHAMMADI		

RELATIVE BORDER SCALE IS IN MILLIMETERS 0 20 40 60 80

USERNAME => lGraham
DGN FILE => 41123uza045.dgn

CU 04240

EA 1123U1

LAST REVISION 00-00-00 | DATE PLOTTED => 09-NOV-2005 | TIME PLOTTED => 15:07

DIST	COUNTY	ROUTE	KILOMETER POST TOTAL PROJECT	SHEET No	TOTAL SHEETS
04	SM	1			

Min Maung 9/30/05
REGISTERED ELECTRICAL ENGINEER

PLANS APPROVAL DATE

REGISTERED PROFESSIONAL ENGINEER MIN MAUNG No. E012210 Exp. 09/30/06 ELECT STATE OF CALIFORNIA

The State of California or its officers or agents shall not be responsible for the accuracy or completeness of electronic copies of this plan sheet.

HNTB *Corporation*
200 E. SANDPOINTE AVENUE, SUITE 200
SANTA ANA, CALIFORNIA 92707

Caltrans now has a web site! To get to the web site, go to: http://www.dot.ca.gov

Caltrans Metric

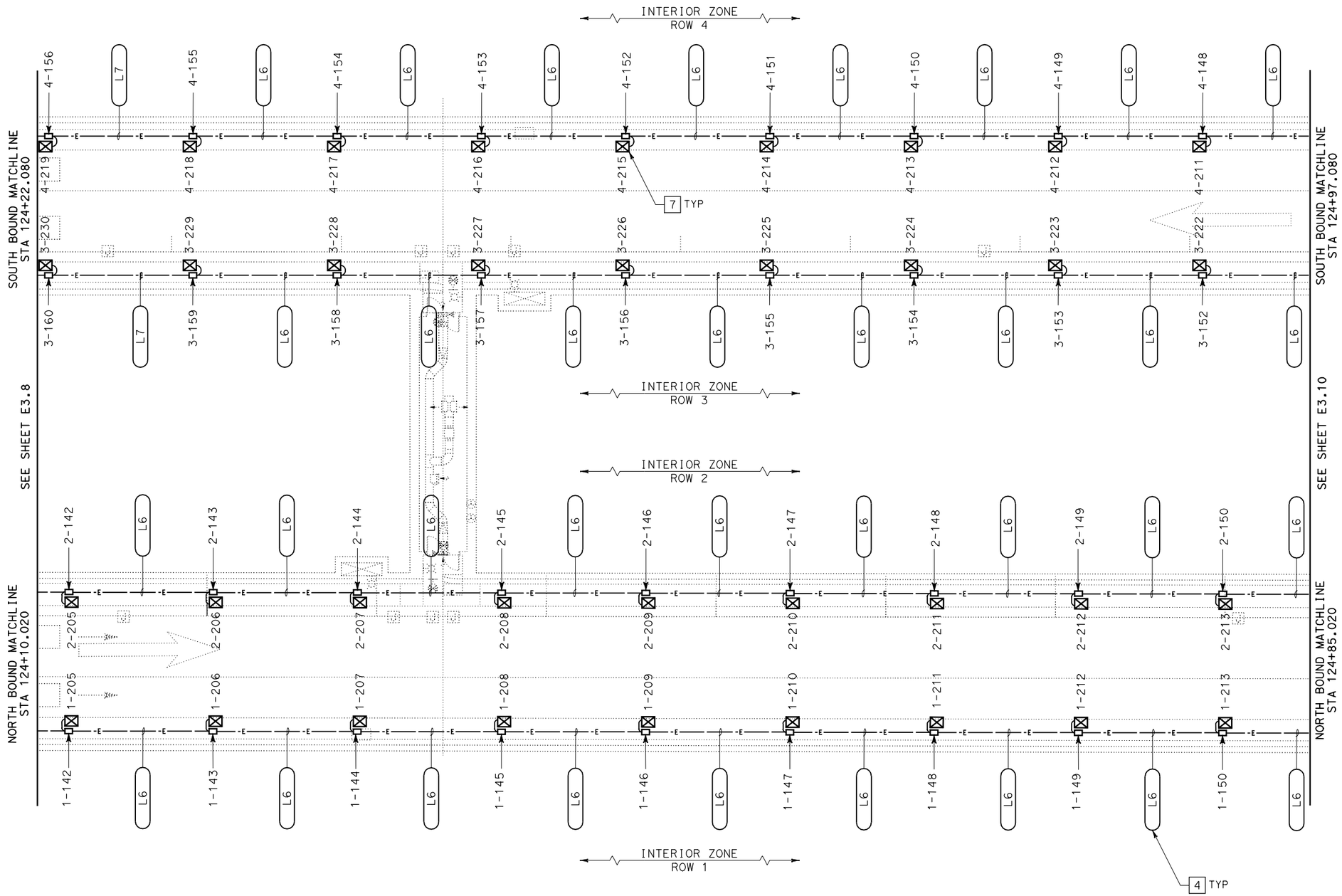

PLAN

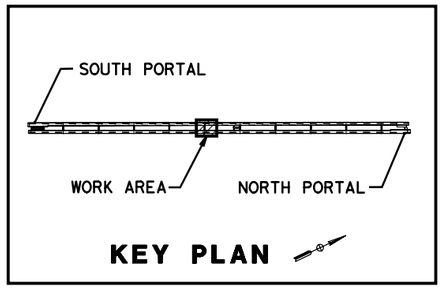

KEY PLAN

ALL DIMENSIONS ARE IN MILLIMETERS UNLESS OTHERWISE SHOWN

TUNNEL LIGHTING PLAN NO. 9

SCALE 1:125

E3.9

PS&E SUBMITTAL (11/18/05)
NOT FOR CONSTRUCTION

STATE OF CALIFORNIA - DEPARTMENT OF TRANSPORTATION
Caltrans
ELECTRICAL

DESIGN OVERSIGHT: BEHZAD GOLEMOHAMMADI

CALCULATED/DESIGNED BY: A. GOROVAYA
CHECKED BY: M. MAUNG

DATE	REVISED BY	DATE REVISED
9/30/05		

LAST REVISION 00-00-00
DATE PLOTTED => 09-NOV-2005
TIME PLOTTED => 15:07

RELATIVE BORDER SCALE IS IN MILLIMETERS 0 20 40 60 80

USERNAME => lGraham
DGN FILE => 41123uza046.dgn

CU 04240
EA 1123U1

DIST	COUNTY	ROUTE	KILOMETER POST TOTAL PROJECT	SHEET No	TOTAL SHEETS
04	SM	1			

Min Maung 9/30/05
REGISTERED ELECTRICAL ENGINEER

PLANS APPROVAL DATE

REGISTERED PROFESSIONAL ENGINEER
MIN MAUNG
No. E012210
Exp. 09/30/06
ELECT
STATE OF CALIFORNIA

The State of California or its officers or agents shall not be responsible for the accuracy or completeness of electronic copies of this plan sheet.

HNTB *Corporation*
200 E. SANDPOINTE AVENUE, SUITE 200
SANTA ANA, CALIFORNIA 92707

Caltrans now has a web site! To get to the web site, go to: http://www.dot.ca.gov

Caltrans Metric

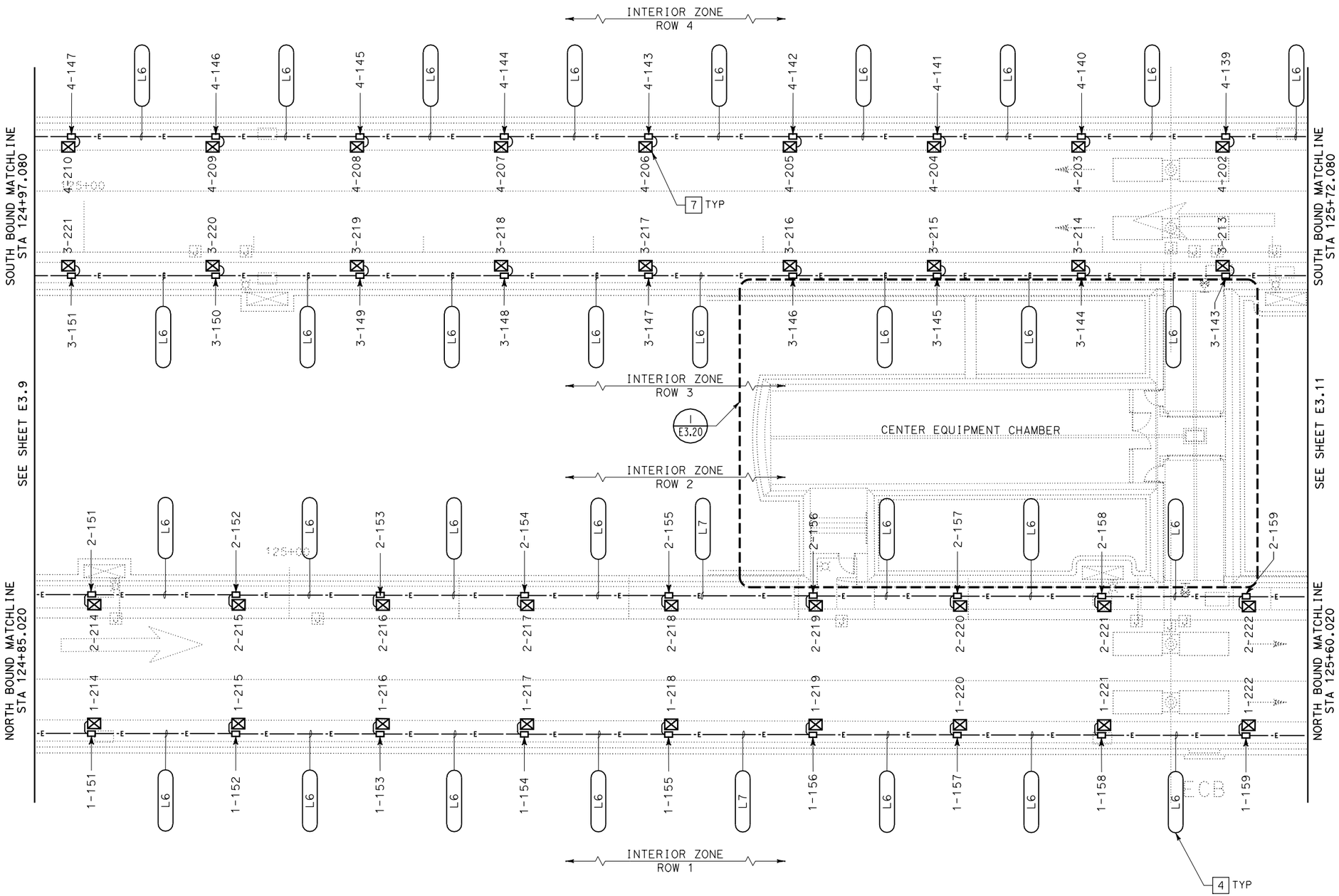

PLAN

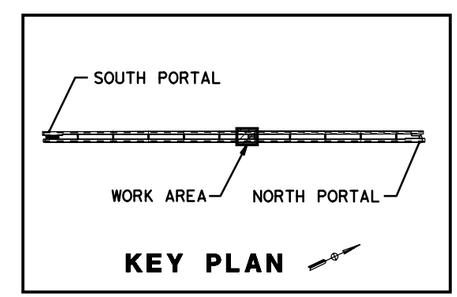

KEY PLAN

ALL DIMENSIONS ARE IN MILLIMETERS UNLESS OTHERWISE SHOWN

TUNNEL LIGHTING PLAN NO. 10

SCALE 1:125

E3.10

PS&E SUBMITTAL (11/18/05)
NOT FOR CONSTRUCTION

CALCULATED/DESIGNED BY	A. GOROVAYA	DATE	REVISED BY
CHECKED BY	M. MAUNG	9/30/05	DATE REVISED

DESIGN OVERSIGHT
BEHZAD GOLEMOHAMMADI

STATE OF CALIFORNIA - DEPARTMENT OF TRANSPORTATION
Caltrans
ELECTRICAL

LAST REVISION 00-00-00
DATE PLOTTED => 09-NOV-2005
TIME PLOTTED => 15:07

RELATIVE BORDER SCALE IS IN MILLIMETERS 0 20 40 60 80

USERNAME => lGraham
DGN FILE => 41123uza047.dgn

CU 04240
EA 1123U1

DIST	COUNTY	ROUTE	KILOMETER POST TOTAL PROJECT	SHEET No	TOTAL SHEETS
04	SM	1			

Min Maung 9/30/05
REGISTERED ELECTRICAL ENGINEER

PLANS APPROVAL DATE

REGISTERED PROFESSIONAL ENGINEER
MIN MAUNG
No. E012210
Exp. 09/30/06
ELECT
STATE OF CALIFORNIA

The State of California or its officers or agents shall not be responsible for the accuracy or completeness of electronic copies of this plan sheet.

HNTB *Corporation*
200 E. SANDPOINTE AVENUE, SUITE 200
SANTA ANA, CALIFORNIA 92707

Caltrans now has a web site! To get to the web site, go to: http://www.dot.ca.gov

Caltrans Metric

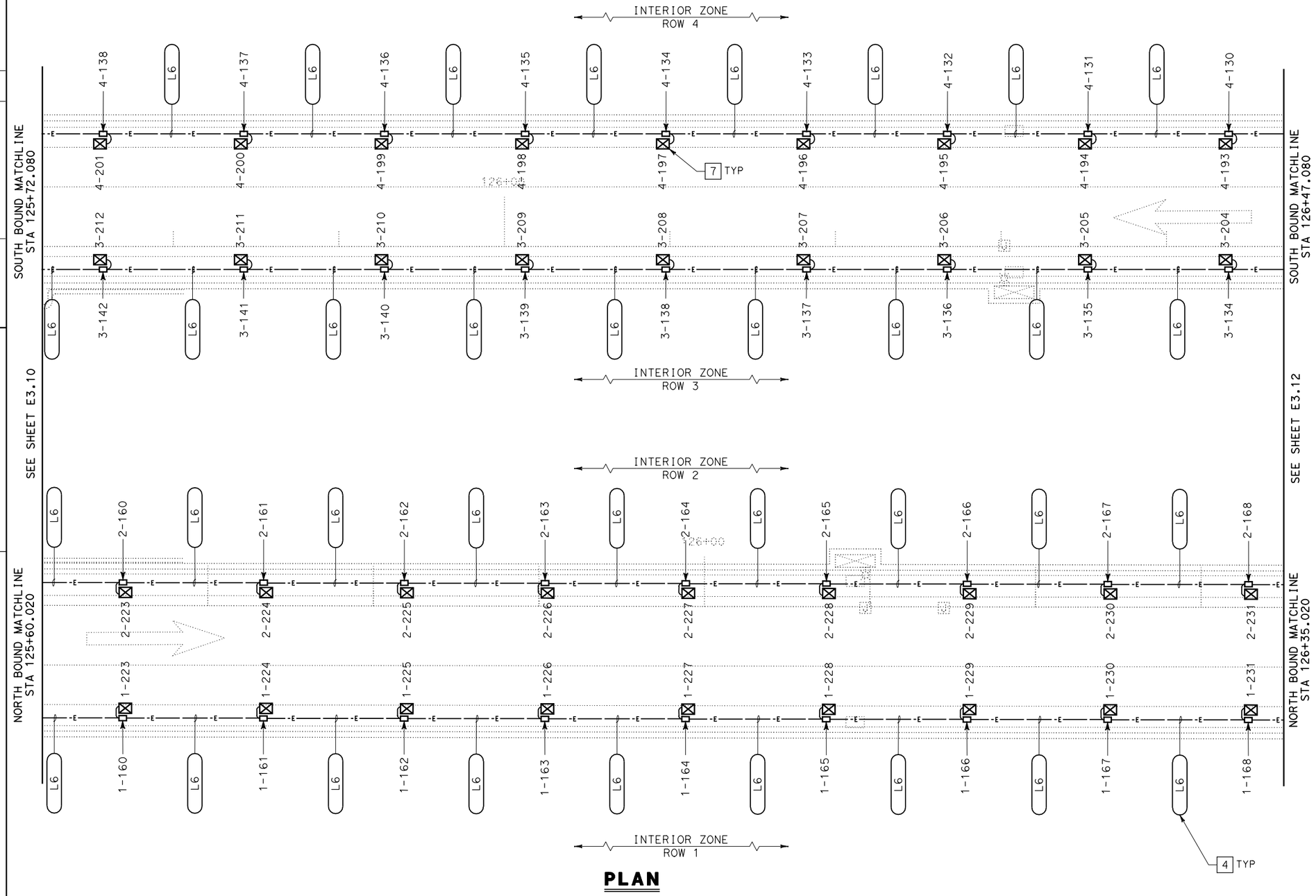

PLAN

PS&E SUBMITTAL (11/18/05)
NOT FOR CONSTRUCTION

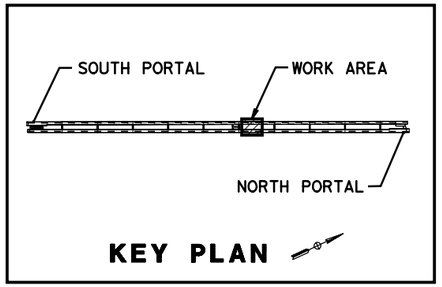

ALL DIMENSIONS ARE IN MILLIMETERS UNLESS OTHERWISE SHOWN

TUNNEL LIGHTING PLAN NO. 11

SCALE 1:125

E3.11

STATE OF CALIFORNIA - DEPARTMENT OF TRANSPORTATION
Caltrans
ELECTRICAL

DESIGN OVERSIGHT: BEHZAD GOLEMOHAMMADI

CALCULATED/DESIGNED BY: A. GOROVAYA
CHECKED BY: M. MAUNG

REVISED BY	DATE	DATE REVISED
	9/30/05	

LAST REVISION 00-00-00
DATE PLOTTED => 09-NOV-2005
TIME PLOTTED => 15:07

RELATIVE BORDER SCALE IS IN MILLIMETERS 0 20 40 60 80

USERNAME => lGraham
DGN FILE => 41123uza048.dgn

CU 04240
EA 1123U1

DIST	COUNTY	ROUTE	KILOMETER POST TOTAL PROJECT	SHEET No	TOTAL SHEETS
04	SM	1			

Min Maung 9/30/05
REGISTERED ELECTRICAL ENGINEER

PLANS APPROVAL DATE

REGISTERED PROFESSIONAL ENGINEER MIN MAUNG No. E012210 Exp. 09/30/06 ELECT STATE OF CALIFORNIA

The State of California or its officers or agents shall not be responsible for the accuracy or completeness of electronic copies of this plan sheet.

HNTB *Corporation*
200 E. SANDPOINTE AVENUE, SUITE 200
SANTA ANA, CALIFORNIA 92707

Caltrans now has a web site! To get to the web site, go to: http://www.dot.ca.gov

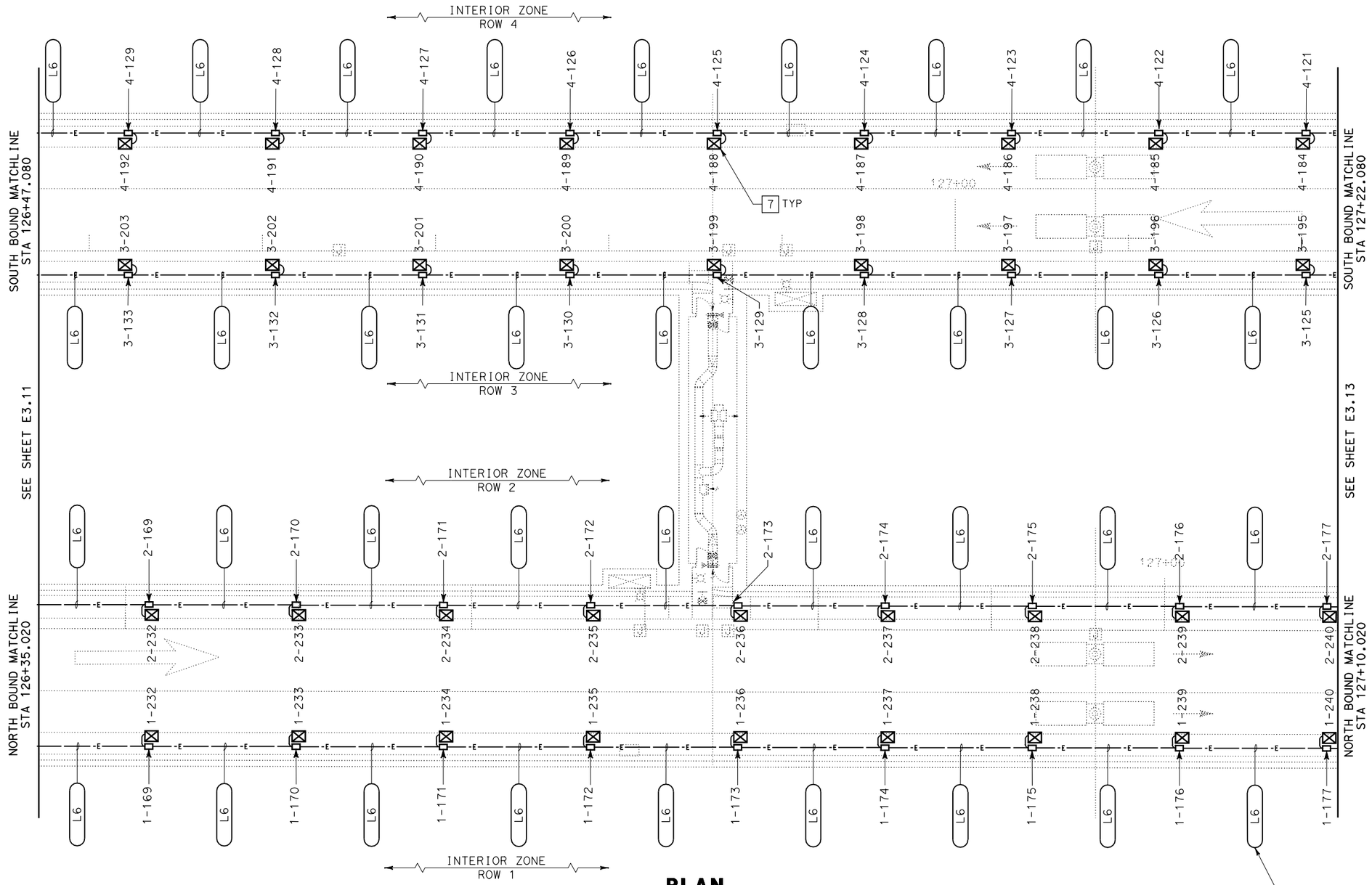

PLAN

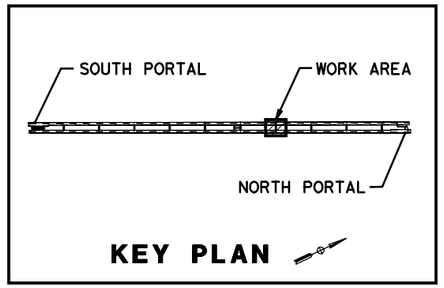

KEY PLAN

ALL DIMENSIONS ARE IN MILLIMETERS UNLESS OTHERWISE SHOWN

TUNNEL LIGHTING PLAN NO. 12

SCALE 1:125

E3.12

PS&E SUBMITTAL (11/18/05)
NOT FOR CONSTRUCTION

STATE OF CALIFORNIA - DEPARTMENT OF TRANSPORTATION
Caltrans
ELECTRICAL

DESIGN OVERSIGHT: BEHZAD GOLEMOHAMMADI
CALCULATED/DESIGNED BY: A. GOROVAYA
CHECKED BY: M. MAUNG
DATE REVISED BY: 9/30/05
DATE REVISED

LAST REVISION 00-00-00
DATE PLOTTED => 09-NOV-2005
TIME PLOTTED => 15:07

RELATIVE BORDER SCALE IS IN MILLIMETERS 0 20 40 60 80

USERNAME => lGraham
DGN FILE => 41123uza049.dgn

CU 04240
EA 1123U1

DIST	COUNTY	ROUTE	KILOMETER POST TOTAL PROJECT	SHEET No	TOTAL SHEETS
04	SM	1			

Min Maung 9/30/05
REGISTERED ELECTRICAL ENGINEER

PLANS APPROVAL DATE

REGISTERED PROFESSIONAL ENGINEER
MIN MAUNG
No. E012210
Exp. 09/30/06
ELECT
STATE OF CALIFORNIA

The State of California or its officers or agents shall not be responsible for the accuracy or completeness of electronic copies of this plan sheet.

HNTB *Corporation*
200 E. SANDPOINTE AVENUE, SUITE 200
SANTA ANA, CALIFORNIA 92707

Caltrans now has a web site! To get to the web site, go to: http://www.dot.ca.gov

Caltrans Metric

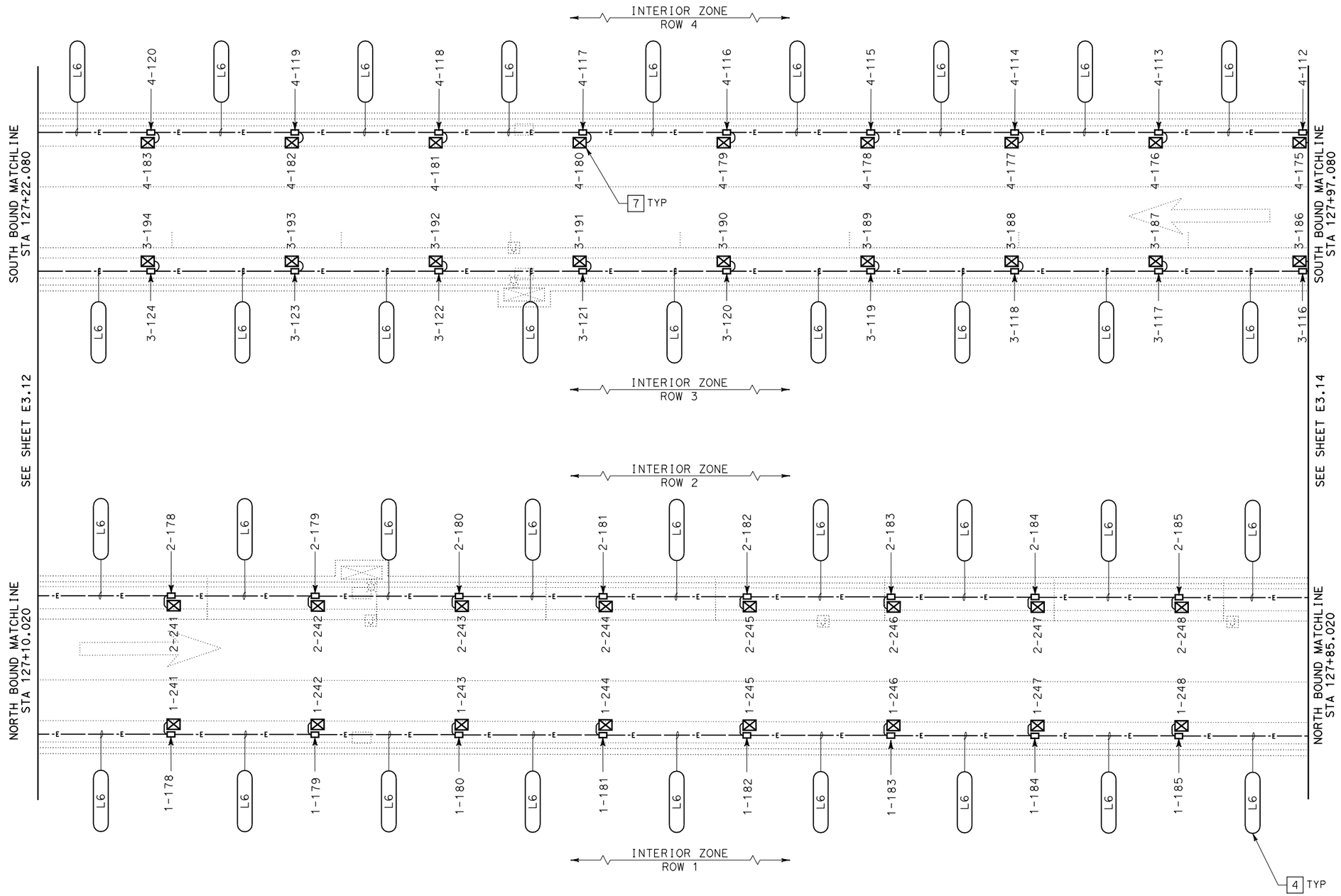

PLAN

PS&E SUBMITTAL (11/18/05)
NOT FOR CONSTRUCTION

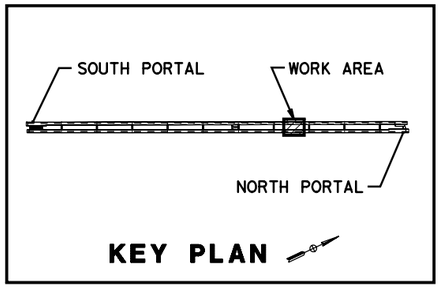

ALL DIMENSIONS ARE IN MILLIMETERS UNLESS OTHERWISE SHOWN

TUNNEL LIGHTING PLAN NO. 13

SCALE 1:125

E3.13

STATE OF CALIFORNIA - DEPARTMENT OF TRANSPORTATION
Caltrans
ELECTRICAL

DESIGN OVERSIGHT: BEHZAD GOLEMOHAMMADI
CALCULATED/DESIGNED BY: A. GOROVAYA
CHECKED BY: M. MAUNG
DATE: 9/30/05
REVISED BY
DATE REVISED

LAST REVISION 00-00-00
DATE PLOTTED => 09-NOV-2005
TIME PLOTTED => 15:07

RELATIVE BORDER SCALE IS IN MILLIMETERS 0 20 40 60 80

USERNAME => lGraham
DGN FILE => 41123uza050.dgn

CU 04240
EA 1123U1

DIST	COUNTY	ROUTE	KILOMETER POST TOTAL PROJECT	SHEET No	TOTAL SHEETS
04	SM	1			

Min Maung 9/30/05
REGISTERED ELECTRICAL ENGINEER

PLANS APPROVAL DATE

REGISTERED PROFESSIONAL ENGINEER
MIN MAUNG
No. E012210
Exp. 09/30/06
ELECT
STATE OF CALIFORNIA

The State of California or its officers or agents shall not be responsible for the accuracy or completeness of electronic copies of this plan sheet.

HNTB *Corporation*
200 E. SANDPOINTE AVENUE, SUITE 200
SANTA ANA, CALIFORNIA 92707

Caltrans now has a web site! To get to the web site, go to: http://www.dot.ca.gov

Caltrans Metric

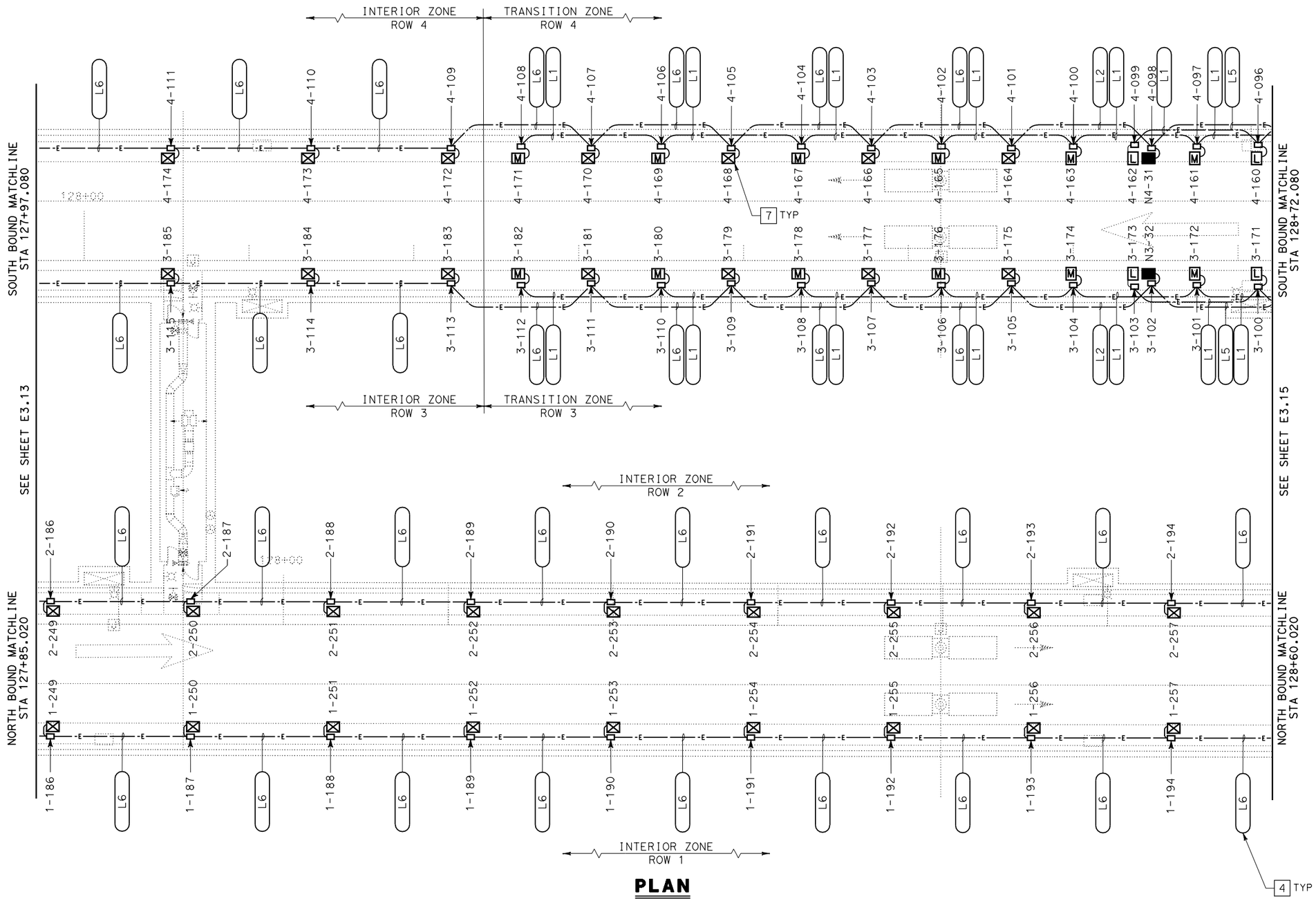

PLAN
1:125

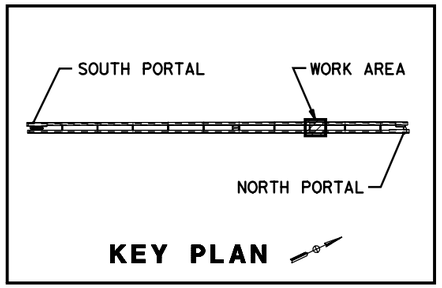

KEY PLAN

ALL DIMENSIONS ARE IN MILLIMETERS UNLESS OTHERWISE SHOWN

TUNNEL LIGHTING PLAN NO. 14

SCALE 1:125

E3.14

PS&E SUBMITTAL (11/18/05)
NOT FOR CONSTRUCTION

STATE OF CALIFORNIA - DEPARTMENT OF TRANSPORTATION
Caltrans
ELECTRICAL

DESIGN OVERSIGHT: BEHZAD GOLEMOHAMMADI

CALCULATED/DESIGNED BY: A. GOROVAYA
CHECKED BY: M. MAUNG

REVISED BY	DATE	DATE REVISED
	9/30/05	

LAST REVISION 00-00-00
DATE PLOTTED => 09-NOV-2005
TIME PLOTTED => 15:07

RELATIVE BORDER SCALE IS IN MILLIMETERS 0 20 40 60 80

USERNAME => lGraham
DGN FILE => 41123uza051.dgn

CU 04240
EA 1123U1

DIST	COUNTY	ROUTE	KILOMETER POST TOTAL PROJECT	SHEET No	TOTAL SHEETS
04	SM	1			

Min Maung 9/30/05
REGISTERED ELECTRICAL ENGINEER

PLANS APPROVAL DATE

REGISTERED PROFESSIONAL ENGINEER MIN MAUNG No. E012210 Exp. 09/30/06 ELECT STATE OF CALIFORNIA

The State of California or its officers or agents shall not be responsible for the accuracy or completeness of electronic copies of this plan sheet.

HNTB *Corporation*
200 E. SANDPOINTE AVENUE, SUITE 200
SANTA ANA, CALIFORNIA 92707

Caltrans now has a web site! To get to the web site, go to: http://www.dot.ca.gov

Caltrans Metric

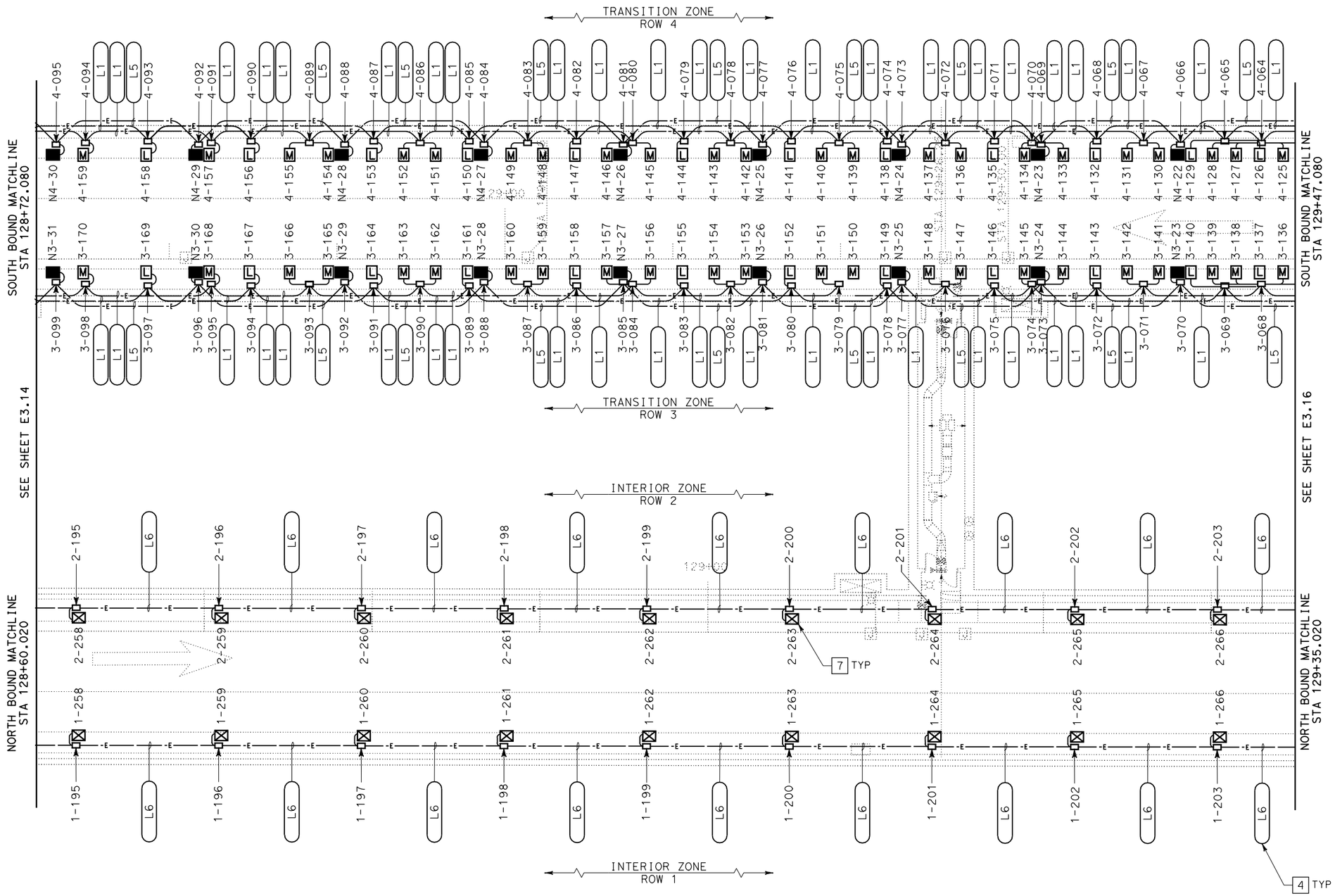

PLAN

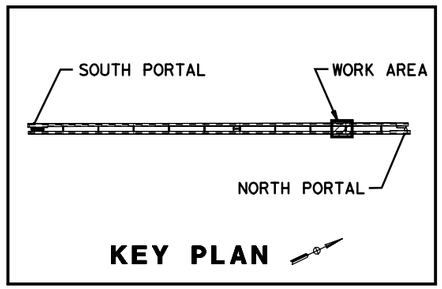

ALL DIMENSIONS ARE IN MILLIMETERS UNLESS OTHERWISE SHOWN

TUNNEL LIGHTING PLAN NO. 15

SCALE 1:125

E3.15

PS&E SUBMITTAL (11/18/05)
NOT FOR CONSTRUCTION

CALCULATED/DESIGNED BY	A. GOROVAYA	DATE 9/30/05
CHECKED BY	M. MAUNG	REVISED BY / DATE REVISED
DESIGN OVERSIGHT	BEHZAD GOLEMOHAMMADI	

STATE OF CALIFORNIA - DEPARTMENT OF TRANSPORTATION
Caltrans
ELECTRICAL

RELATIVE BORDER SCALE IS IN MILLIMETERS 0 20 40 60 80

USERNAME => lGraham
DGN FILE => 41123uza052.dgn

CU 04240 | EA 1123U1

LAST REVISION 00-00-00 | DATE PLOTTED => 09-NOV-2005 TIME PLOTTED => 15:07

DIST	COUNTY	ROUTE	KILOMETER POST TOTAL PROJECT	SHEET No	TOTAL SHEETS
04	SM	1			

Min Maung 9/30/05
REGISTERED ELECTRICAL ENGINEER

PLANS APPROVAL DATE

REGISTERED PROFESSIONAL ENGINEER MIN MAUNG No. E012210 Exp. 09/30/06 ELECT STATE OF CALIFORNIA

The State of California or its officers or agents shall not be responsible for the accuracy or completeness of electronic copies of this plan sheet.

HNTB *Corporation*
200 E. SANDPOINTE AVENUE, SUITE 200
SANTA ANA, CALIFORNIA 92707

Caltrans now has a web site! To get to the web site, go to: http://www.dot.ca.gov

Caltrans Metric

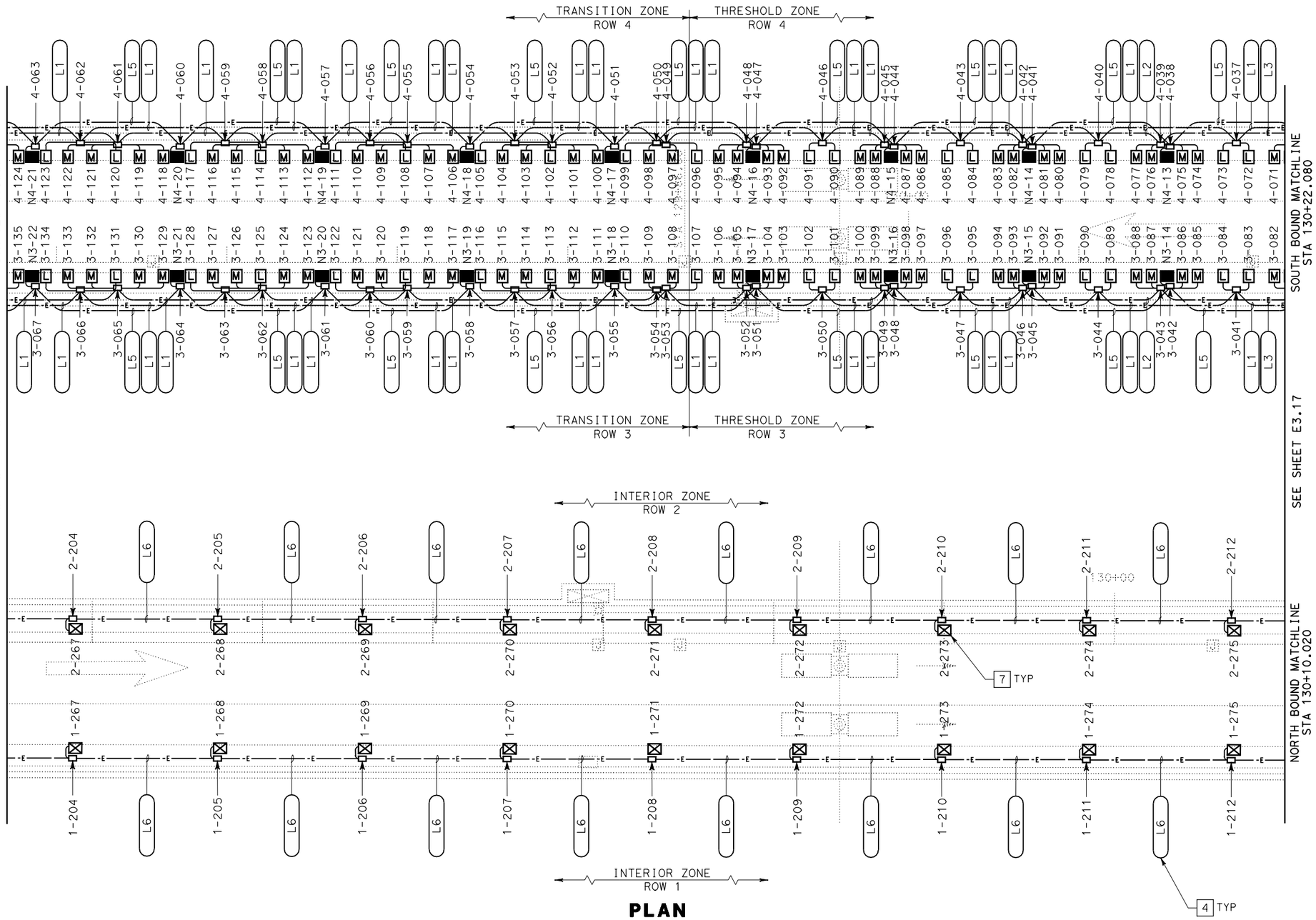

PLAN

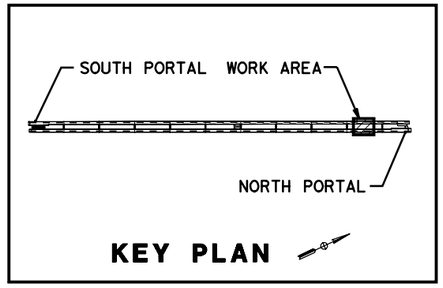

ALL DIMENSIONS ARE IN MILLIMETERS UNLESS OTHERWISE SHOWN

TUNNEL LIGHTING PLAN NO. 16

SCALE 1:125

E3.16

PS&E SUBMITTAL (11/18/05)
NOT FOR CONSTRUCTION

CALCULATED/DESIGNED BY	A. GOROVAYA	DATE	REVISED BY
CHECKED BY	M. MAUNG	9/30/05	DATE REVISED
DESIGN OVERSIGHT	BEHZAD GOLEMOHAMMADI		

STATE OF CALIFORNIA - DEPARTMENT OF TRANSPORTATION
Caltrans
ELECTRICAL

LAST REVISION 00-00-00 | DATE PLOTTED => 09-NOV-2005 | TIME PLOTTED => 15:08

RELATIVE BORDER SCALE IS IN MILLIMETERS 0 20 40 60 80

USERNAME => lGraham
DGN FILE => 41123uza053.dgn

CU 04240 | EA 1123U1

DIST	COUNTY	ROUTE	KILOMETER POST TOTAL PROJECT	SHEET No	TOTAL SHEETS
04	SM	1			

Min Maung 9/30/05
REGISTERED ELECTRICAL ENGINEER

PLANS APPROVAL DATE

REGISTERED PROFESSIONAL ENGINEER MIN MAUNG No. E012210 Exp. 09/30/06 ELECT STATE OF CALIFORNIA

The State of California or its officers or agents shall not be responsible for the accuracy or completeness of electronic copies of this plan sheet.

HNTB *Corporation*
200 E. SANDPOINTE AVENUE, SUITE 200
SANTA ANA, CALIFORNIA 92707

Caltrans now has a web site! To get to the web site, go to: http://www.dot.ca.gov

Caltrans Metric

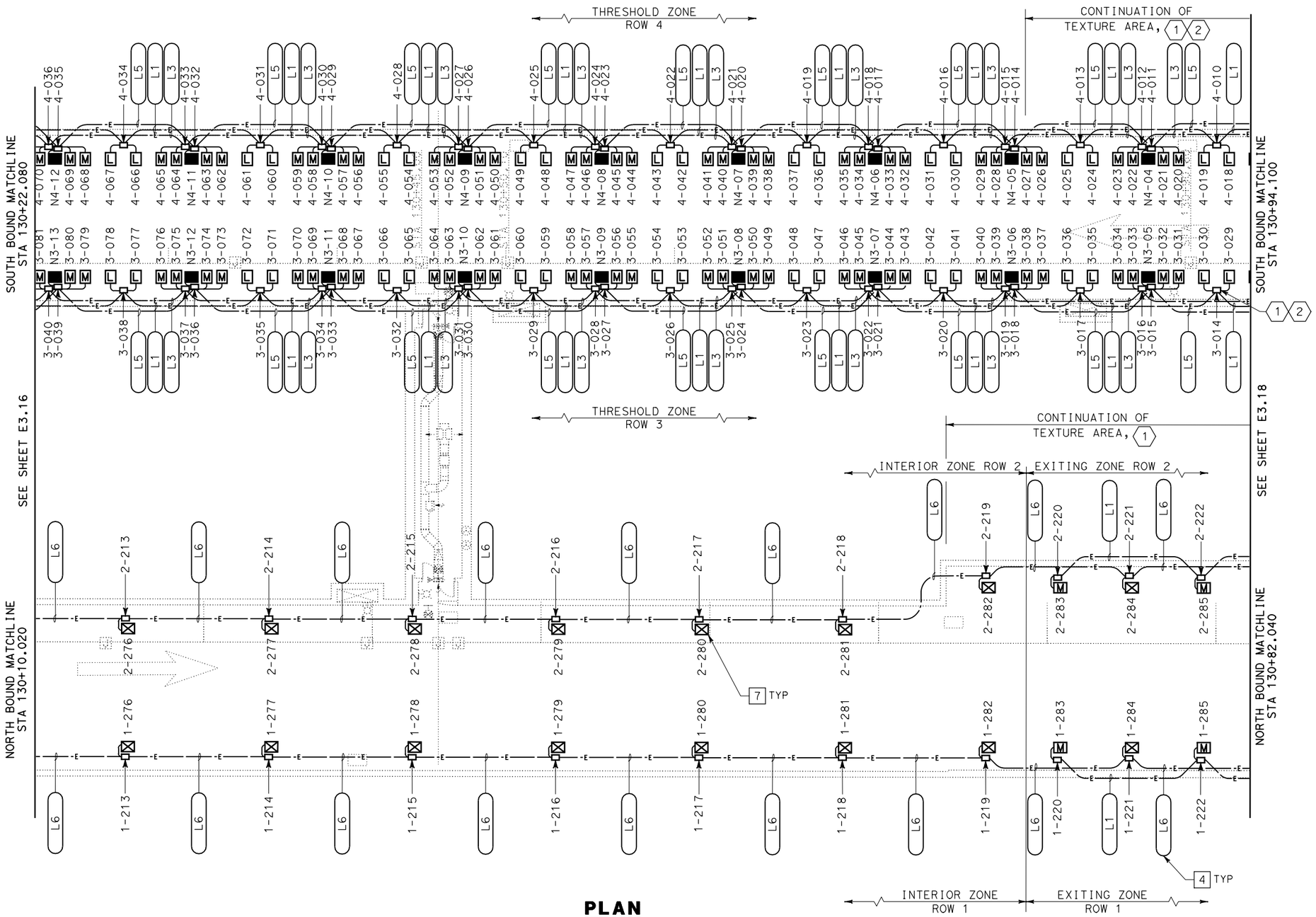

PLAN

1 SEE E8.18 FOR INSTALLATION DETAILS.

2 FOR SIMPLICITY, THE J-BOXES ARE NOT SHOWN AT ACTUAL LOCATION. SEE SHEETS E10.1 THROUGH E10.4 FOR EXACT LOCATION.

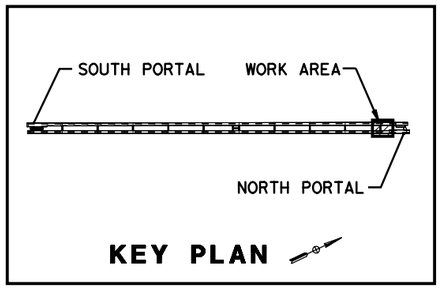

ALL DIMENSIONS ARE IN MILLIMETERS UNLESS OTHERWISE SHOWN

TUNNEL LIGHTING PLAN NO. 17

SCALE 1:125

E3.17

PS&E SUBMITTAL (11/18/05)
NOT FOR CONSTRUCTION

STATE OF CALIFORNIA - DEPARTMENT OF TRANSPORTATION	CALCULATED/DESIGNED BY A. GOROVAYA	DATE 9/30/05	REVISED BY
Caltrans	CHECKED BY M. MAUNG		DATE REVISED
ELECTRICAL	DESIGN OVERSIGHT BEHZAD GOLEMOHAMMADI		

LAST REVISION 00-00-00 | DATE PLOTTED => 09-NOV-2005 TIME PLOTTED => 15:08

RELATIVE BORDER SCALE IS IN MILLIMETERS 0 20 40 60 80

USERNAME => lGraham
DGN FILE => 41123uza054.dgn

CU 04240 | EA 1123U1

DIST	COUNTY	ROUTE	KILOMETER POST TOTAL PROJECT	SHEET No	TOTAL SHEETS
04	SM	1			

Min Maung 9/30/05
REGISTERED ELECTRICAL ENGINEER

PLANS APPROVAL DATE

REGISTERED PROFESSIONAL ENGINEER
MIN MAUNG
No. E012210
Exp. 09/30/06
ELECT
STATE OF CALIFORNIA

The State of California or its officers or agents shall not be responsible for the accuracy or completeness of electronic copies of this plan sheet.

HNTB *Corporation*
200 E. SANDPOINTE AVENUE, SUITE 200
SANTA ANA, CALIFORNIA 92707

Caltrans now has a web site! To get to the web site, go to: http://www.dot.ca.gov

Caltrans Metric

SHEET NOTES:

1. SEE E8.17 FOR INSTALLATION DETAILS.
2. SEE E8.18 FOR INSTALLATION DETAILS.
3. FOR SIMPLICITY, THE J-BOXES ARE NOT SHOWN AT ACTUAL LOCATION. SEE SHEETS E10.1 THROUGH E10.4 FOR EXACT LOCATION.

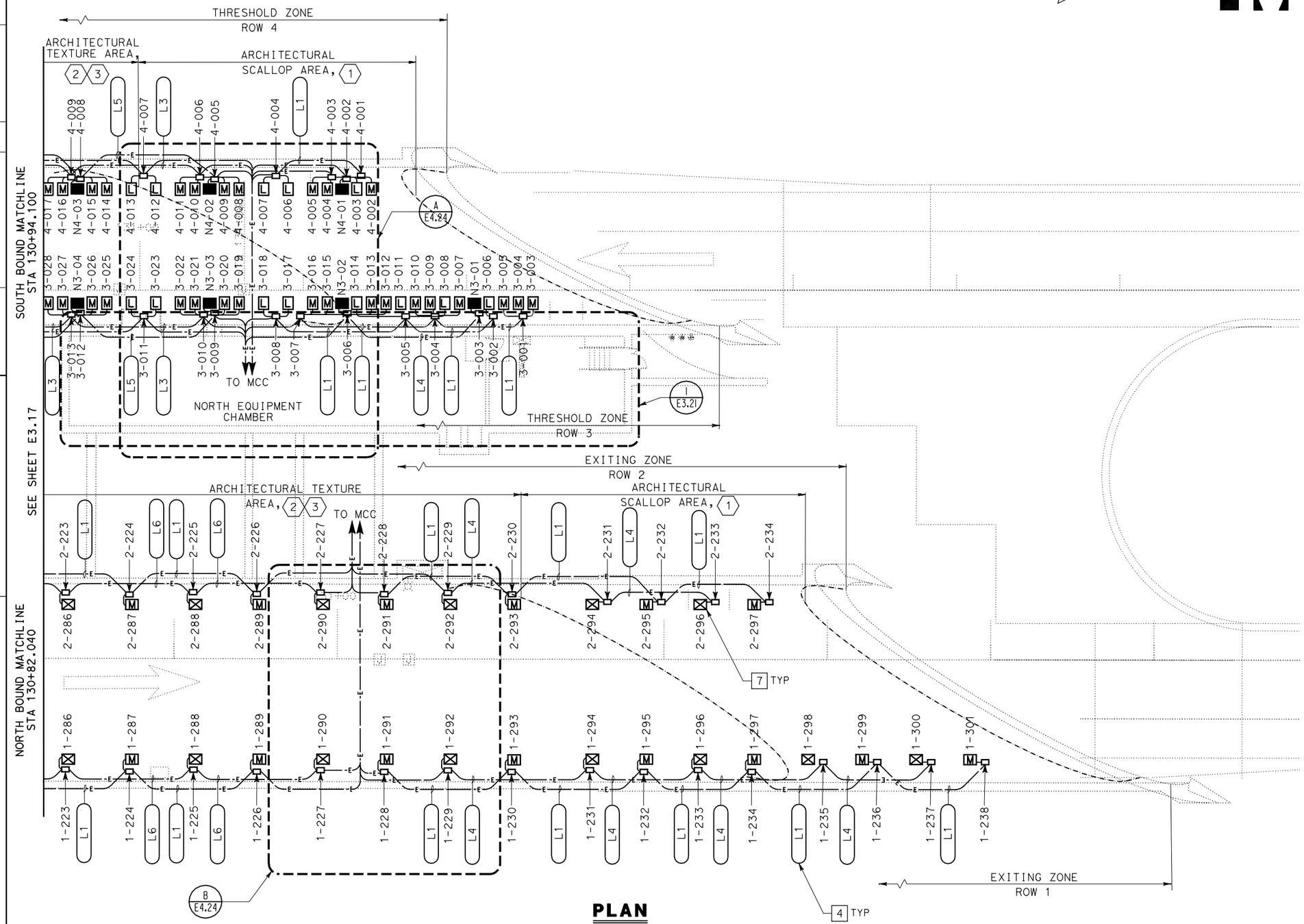

PLAN

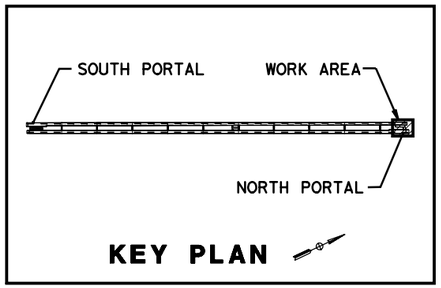

ALL DIMENSIONS ARE IN MILLIMETERS UNLESS OTHERWISE SHOWN

TUNNEL LIGHTING PLAN NO. 18

SCALE 1:125

E3.18

PS&E SUBMITTAL (11/18/05)
NOT FOR CONSTRUCTION

STATE OF CALIFORNIA - DEPARTMENT OF TRANSPORTATION
Caltrans
ELECTRICAL

DESIGN OVERSIGHT: BEHZAD GOLEMOHAMMADI
CALCULATED/DESIGNED BY: A. GOROVAYA
CHECKED BY: M. MAUNG

REVISED BY	DATE REVISED	DATE
		9/30/05

LAST REVISION 00-00-00
DATE PLOTTED => 09-NOV-2005
TIME PLOTTED => 15:08

RELATIVE BORDER SCALE IS IN MILLIMETERS 0 20 40 60 80

USERNAME => lGraham
DGN FILE => 41123uza055.dgn

CU 04240
EA 1123U1

DIST	COUNTY	ROUTE	KILOMETER POST TOTAL PROJECT	SHEET No	TOTAL SHEETS
04	SM	1			

REGISTERED ELECTRICAL ENGINEER 9/30/05

PLANS APPROVAL DATE

REGISTERED PROFESSIONAL ENGINEER MIN MAUNG No. E012210 Exp. 09/30/06 ELECT STATE OF CALIFORNIA

The State of California or its officers or agents shall not be responsible for the accuracy or completeness of electronic copies of this plan sheet.

HNTB *Corporation*
200 E. SANDPOINTE AVENUE, SUITE 200
SANTA ANA, CALIFORNIA 92707

Caltrans now has a web site! To get to the web site, go to: http://www.dot.ca.gov

IDENTIFICATION STAMP
DIV. OF THE STATE ARCHITECT
SACRAMENTO REGIONAL OFFICE
02-107518
AC
DATE 11-15-05

Caltrans Metric

SHEET NOTES:

1. FOR MOUNTING LIGHT FIXTURE SEE SHEET E8.10, DETAIL 5.
2. PROVIDE LATERAL AND LONGITUDINAL BRACE SUPPORT. FOR MOUNTING FIXTURE SEE SHEET E8.10, DETAIL 2.
3. FOR LIGHT FIXTURE SCHEDULE SEE SHEET E9.1.

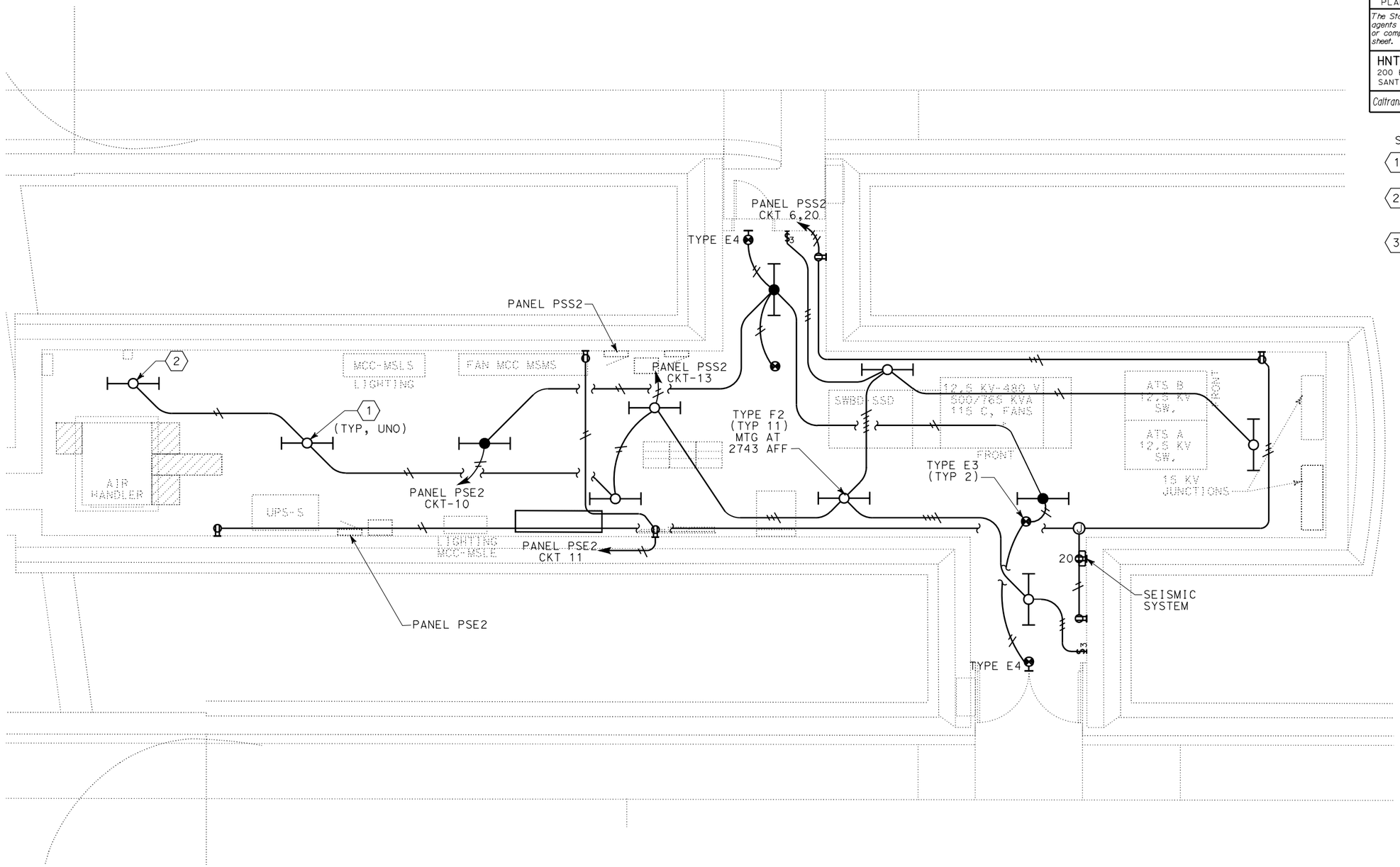

1 SOUTH EQUIPMENT CHAMBER LIGHTING PLAN

PS&E SUBMITTAL (11/18/05)
NOT FOR CONSTRUCTION

ALL DIMENSIONS ARE IN MILLIMETERS UNLESS OTHERWISE SHOWN

SOUTH EQUIPMENT CHAMBER LIGHTING PLAN

SCALE 1:50

E3.19

DATE	REVISED BY	DATE REVISED
9/30/05		

CALCULATED/DESIGNED BY P. WHOBREY
CHECKED BY M. MAUNG

DESIGN OVERSIGHT
BEHZAD GOLEMOHAMMADI

STATE OF CALIFORNIA - DEPARTMENT OF TRANSPORTATION
Caltrans
ELECTRICAL

LAST REVISION 00-00-00
DATE PLOTTED => 29-NOV-2005
TIME PLOTTED => 09:44

RELATIVE BORDER SCALE IS IN MILLIMETERS 0 20 40 60 80

USERNAME => LBragg
DGN FILE => 41123uza056.dgn

CU 04240

EA 1123U1

IDENTIFICATION STAMP
DIV. OF THE STATE ARCHITECT
SACRAMENTO REGIONAL OFFICE
02-107518
AC
DATE 11-15-05

Caltrans Metric

DIST	COUNTY	ROUTE	KILOMETER POST TOTAL PROJECT	SHEET No	TOTAL SHEETS
04	SM	1			

Min Maung 9/30/05
REGISTERED ELECTRICAL ENGINEER

PLANS APPROVAL DATE

REGISTERED PROFESSIONAL ENGINEER
MIN MAUNG
No. E012210
Exp. 09/30/06
ELECT
STATE OF CALIFORNIA

The State of California or its officers or agents shall not be responsible for the accuracy or completeness of electronic copies of this plan sheet.

HNTB *Corporation*
200 E. SANDPOINTE AVENUE, SUITE 200
SANTA ANA, CALIFORNIA 92707

Caltrans now has a web site! To get to the web site, go to: http://www.dot.ca.gov

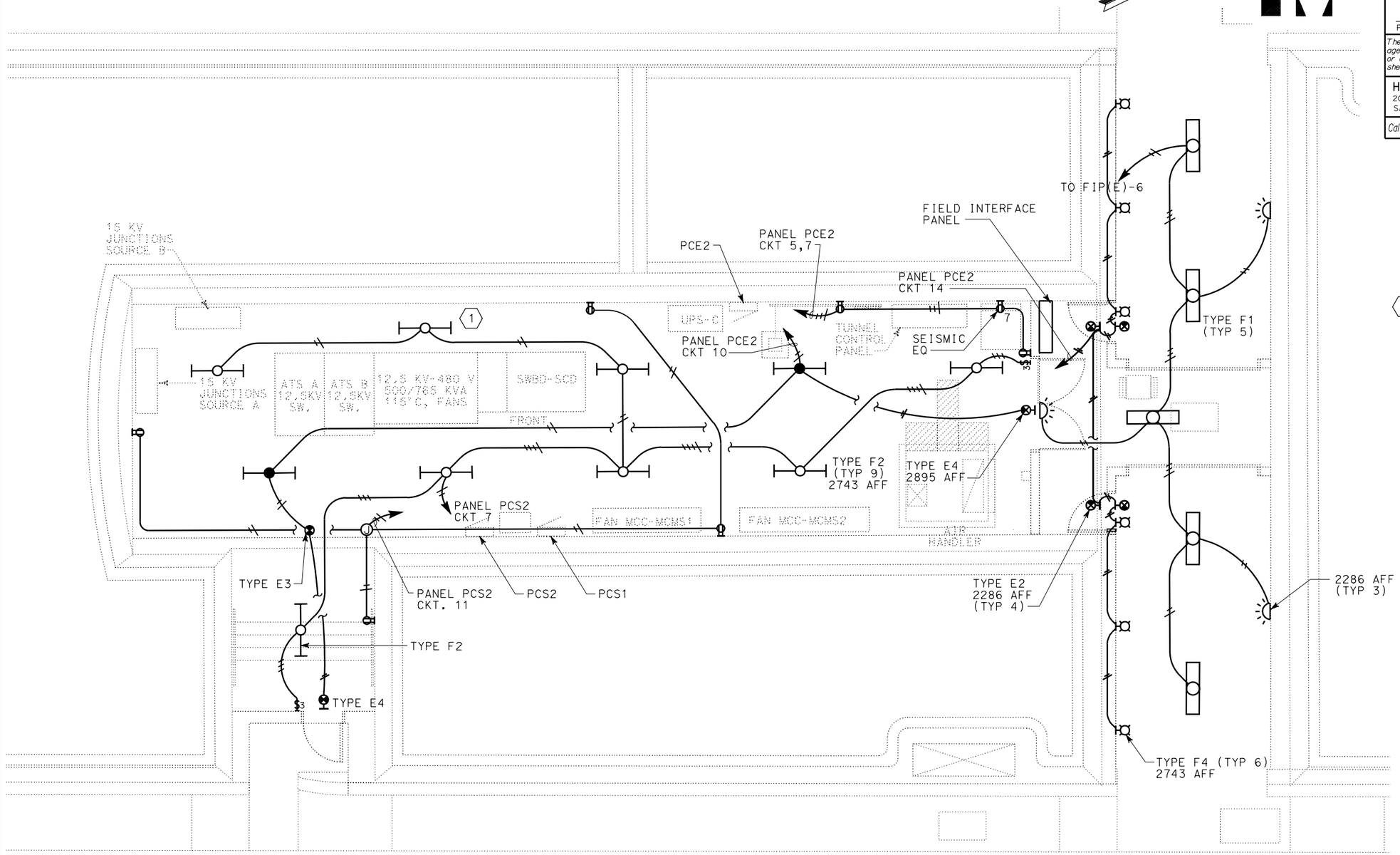

(1) CENTER EQUIPMENT CHAMBER LIGHTING PLAN

SHEET NOTES:

(1) FOR MOUNTING LIGHT FIXTURE SEE SHEET E8.10, DETAIL 5. FOR CENTER EQUIPMENT CHAMBER SECTION, SEE SHEETS E5.3 AND E7.6.

PS&E SUBMITTAL (11/18/05)
NOT FOR CONSTRUCTION

ALL DIMENSIONS ARE IN MILLIMETERS UNLESS OTHERWISE SHOWN

CENTER EQUIPMENT CHAMBER LIGHTING PLAN

SCALE 1:50

E3.20

STATE OF CALIFORNIA - DEPARTMENT OF TRANSPORTATION	DESIGN OVERSIGHT	DATE REVISED BY
Caltrans	BEHZAD GOLEMOHAMMADI	9/30/05 DATE REVISED
ELECTRICAL	CALCULATED/DESIGNED BY P. WHOBREY	
	CHECKED BY M. MAUNG	

LAST REVISION 00-00-00 | DATE PLOTTED => 29-NOV-2005 | TIME PLOTTED => 10:11

RELATIVE BORDER SCALE IS IN MILLIMETERS 0 20 40 60 80

USERNAME => LBragg
DGN FILE => 41123uzq057.dgn

CU 04240 | EA 1123U1

DIST	COUNTY	ROUTE	KILOMETER POST TOTAL PROJECT	SHEET No	TOTAL SHEETS
04	SM	1			

Min Maung 9/30/05
REGISTERED ELECTRICAL ENGINEER

PLANS APPROVAL DATE

REGISTERED PROFESSIONAL ENGINEER MIN MAUNG No. E012210 Exp. 09/30/06 ELECT STATE OF CALIFORNIA

The State of California or its officers or agents shall not be responsible for the accuracy or completeness of electronic copies of this plan sheet.

HNTB *Corporation*
200 E. SANDPOINTE AVENUE, SUITE 200
SANTA ANA, CALIFORNIA 92707

Caltrans now has a web site! To get to the web site, go to: http://www.dot.ca.gov

IDENTIFICATION STAMP
DIV. OF THE STATE ARCHITECT
SACRAMENTO REGIONAL OFFICE
02-107518
AC
DATE 11-15-05

Caltrans Metric

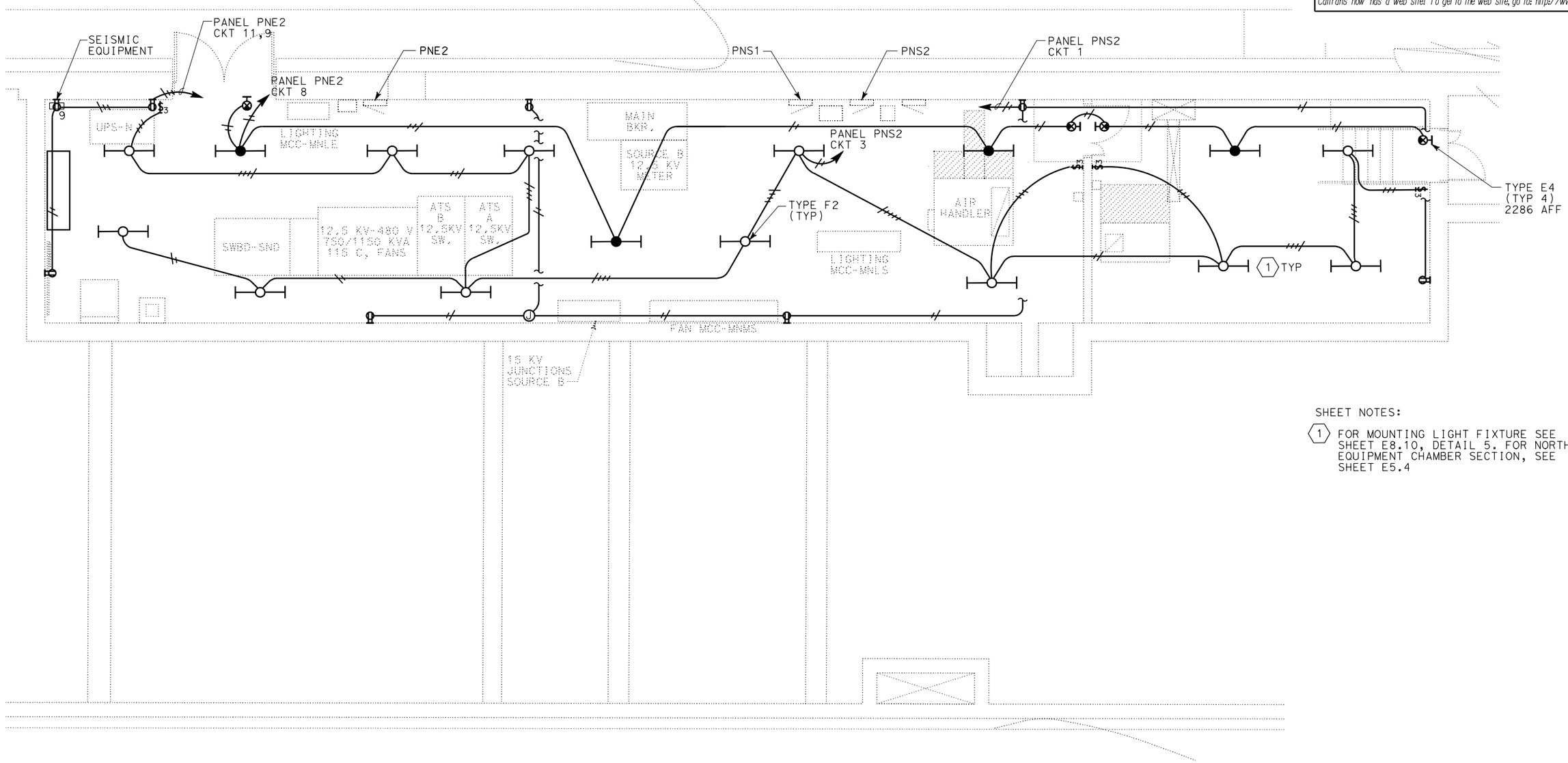

SHEET NOTES:

1. FOR MOUNTING LIGHT FIXTURE SEE SHEET E8.10, DETAIL 5. FOR NORTH EQUIPMENT CHAMBER SECTION, SEE SHEET E5.4

1 NORTH EQUIPMENT CHAMBER UTILITY & EQUIPMENT PLAN

PS&E SUBMITTAL (11/18/05)
NOT FOR CONSTRUCTION

ALL DIMENSIONS ARE IN MILLIMETERS UNLESS OTHERWISE SHOWN

NORTH EQUIPMENT CHAMBER LIGHTING PLAN

SCALE 1:50

E3.21

STATE OF CALIFORNIA - DEPARTMENT OF TRANSPORTATION
Caltrans
ELECTRICAL

DESIGN OVERSIGHT: BEHZAD GOLEMOHAMMADI

CALCULATED/DESIGNED BY: P. WHOBREY
CHECKED BY: M. MAUNG

DATE REVISED BY: 9/30/05
DATE REVISED:

LAST REVISION 00-00-00
DATE PLOTTED => 29-NOV-2005
TIME PLOTTED => 10:13

RELATIVE BORDER SCALE IS IN MILLIMETERS 0 20 40 60 80

USERNAME => LBragg
DGN FILE => 41123uza058.dgn

CU 04240
EA 1123U1

IDENTIFICATION STAMP
DIV. OF THE STATE ARCHITECT
SACRAMENTO REGIONAL OFFICE
02-107518
AC
DATE 11-15-05

DIST	COUNTY	ROUTE	KILOMETER POST TOTAL PROJECT	SHEET No	TOTAL SHEETS
04	SM	1			

Min Maung 9/30/05
REGISTERED ELECTRICAL ENGINEER

PLANS APPROVAL DATE

REGISTERED PROFESSIONAL ENGINEER
MIN MAUNG
No. E012210
Exp. 09/30/06
ELECT
STATE OF CALIFORNIA

The State of California or its officers or agents shall not be responsible for the accuracy or completeness of electronic copies of this plan sheet.

HNTB *Corporation*
200 E. SANDPOINTE AVENUE, SUITE 200
SANTA ANA, CALIFORNIA 92707

Caltrans now has a web site! To get to the web site, go to: http://www.dot.ca.gov

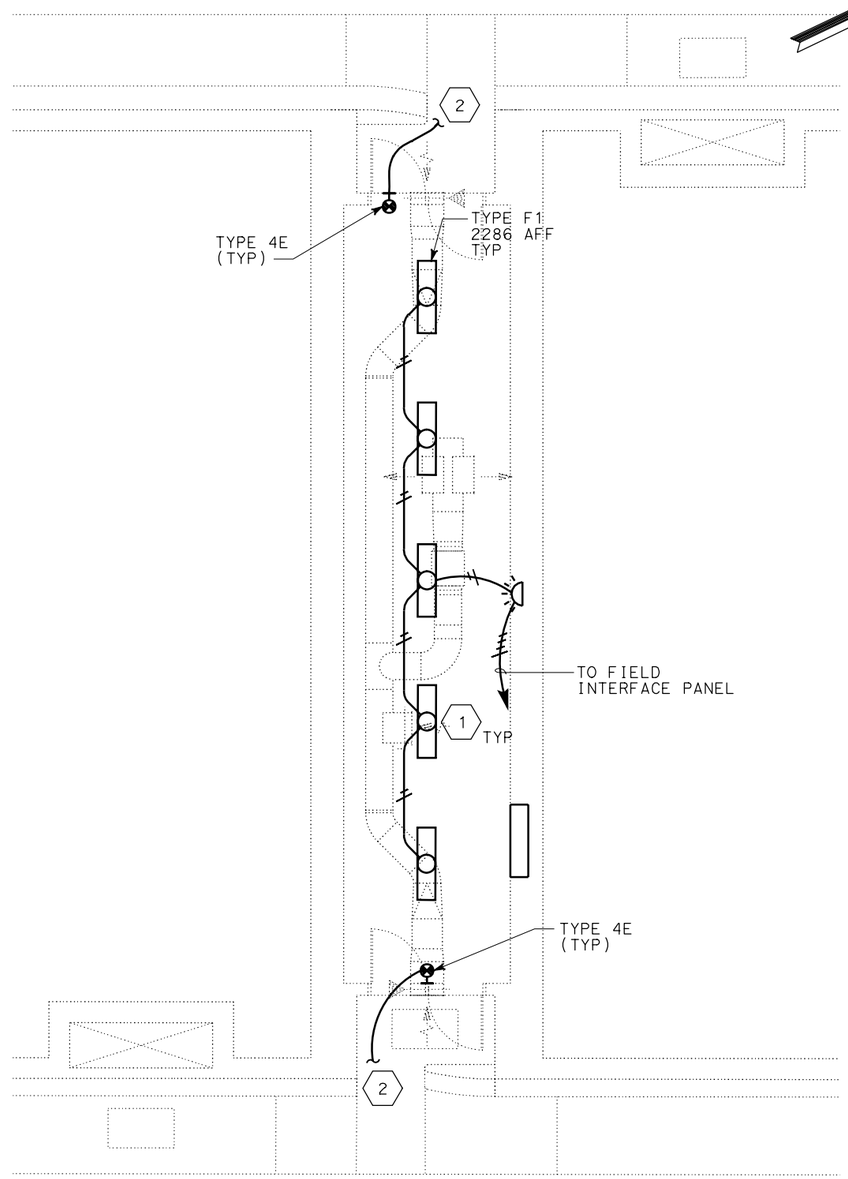

1 TYPICAL CROSS PASSAGE LIGHTING PLAN

SHEET NOTES:

1. LIGHTS HAVE TO BE MOUNTED TO THE STRUT SYSTEM UNDERNEATH THE MECHANICAL DUCTS. CONTRACTOR HAS TO COORDINATE LIGHT INSTALLATION WITH THE MECHANICAL DUCTS.
2. CONNECT TO EXIT FIXTURE IN TUNNEL. SEE TUNNEL POWER PLANS (E4.XX SERIES).

PS&E SUBMITTAL (11/18/05)
NOT FOR CONSTRUCTION

ALL DIMENSIONS ARE IN MILLIMETERS UNLESS OTHERWISE SHOWN

CROSS PASSAGE LIGHTING PLAN

SCALE 1:50

E3.22

	DATE	REVISED BY	DATE REVISED
CALCULATED/DESIGNED BY	A. GOROVAYA		
CHECKED BY	M. MAUNG	9/30/05	

DESIGN OVERSIGHT
BEHZAD GOLEMOHAMMADI

STATE OF CALIFORNIA - DEPARTMENT OF TRANSPORTATION
Caltrans
ELECTRICAL

LAST REVISION 00-00-00
DATE PLOTTED => 29-NOV-2005
TIME PLOTTED => 09:46

IDENTIFICATION STAMP
DIV. OF THE STATE ARCHITECT
SACRAMENTO REGIONAL OFFICE
02-107518
AC
DATE 11-15-05

Caltrans Metric

DIST	COUNTY	ROUTE	KILOMETER POST TOTAL PROJECT	SHEET No	TOTAL SHEETS
04	SM	1			

Min Maung 9/30/05
REGISTERED ELECTRICAL ENGINEER

PLANS APPROVAL DATE

REGISTERED PROFESSIONAL ENGINEER
MIN MAUNG
No. E012210
Exp. 09/30/06
ELECT
STATE OF CALIFORNIA

The State of California or its officers or agents shall not be responsible for the accuracy or completeness of electronic copies of this plan sheet.

HNTB *Corporation*
200 E. SANDPOINTE AVENUE, SUITE 200
SANTA ANA, CALIFORNIA 92707

Caltrans now has a web site! To get to the web site, go to: http://www.dot.ca.gov

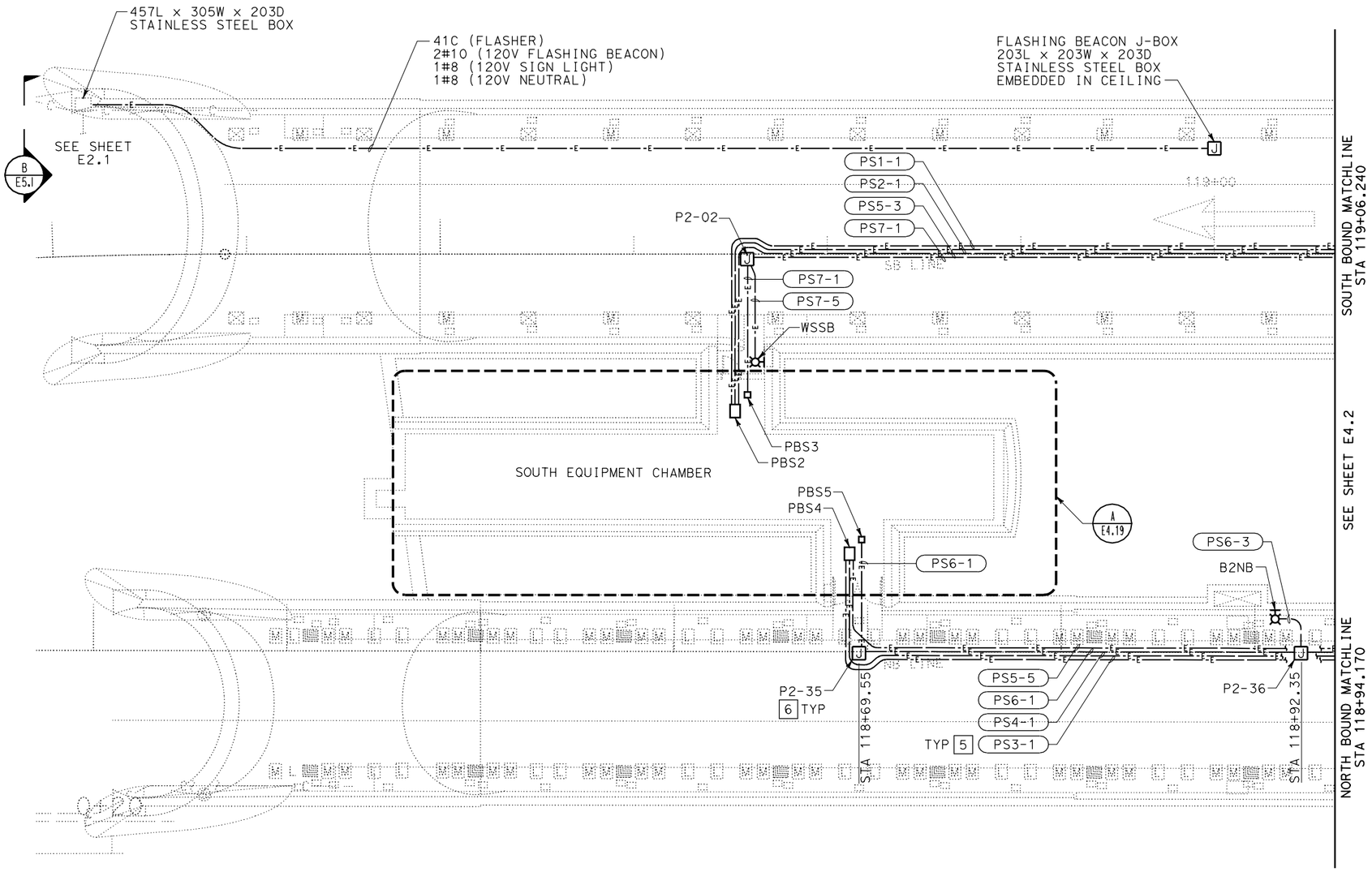

PLAN

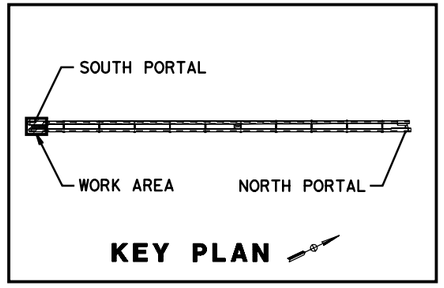

KEY PLAN

ALL DIMENSIONS ARE IN
MILLIMETERS UNLESS OTHERWISE SHOWN

TUNNEL POWER PLAN NO. 1

SCALE 1:125

E4.1

PS&E SUBMITTAL (11/18/05)
NOT FOR CONSTRUCTION

	DATE	REVISED BY	DATE REVISED

CALCULATED/DESIGNED BY: P. WHOBREY
CHECKED BY: M. MAUNG
DESIGN OVERSIGHT: BEHZAD GOLEMOHAMMADI

STATE OF CALIFORNIA - DEPARTMENT OF TRANSPORTATION
Caltrans
ELECTRICAL

LAST REVISION (00-00-00)
DATE PLOTTED => 29-NOV-2005
TIME PLOTTED => 09:49

RELATIVE BORDER SCALE IS IN MILLIMETERS 0 20 40 60 80

USERNAME => LBragg
DGN FILE => 41123uza060.dgn

CU 04240

EA 1123U1

IDENTIFICATION STAMP
DIV. OF THE STATE ARCHITECT
SACRAMENTO REGIONAL OFFICE
02-107518
AC
DATE 11-15-05

Caltrans Metric

DIST	COUNTY	ROUTE	KILOMETER POST TOTAL PROJECT	SHEET No	TOTAL SHEETS
04	SM	1			

Min Maung 9/30/05
REGISTERED ELECTRICAL ENGINEER

PLANS APPROVAL DATE

REGISTERED PROFESSIONAL ENGINEER MIN MAUNG No. E012210 Exp. 09/30/06 ELECT STATE OF CALIFORNIA

The State of California or its officers or agents shall not be responsible for the accuracy or completeness of electronic copies of this plan sheet.

HNTB *Corporation*
200 E. SANDPOINTE AVENUE, SUITE 200
SANTA ANA, CALIFORNIA 92707

Caltrans now has a web site! To get to the web site, go to: http://www.dot.ca.gov

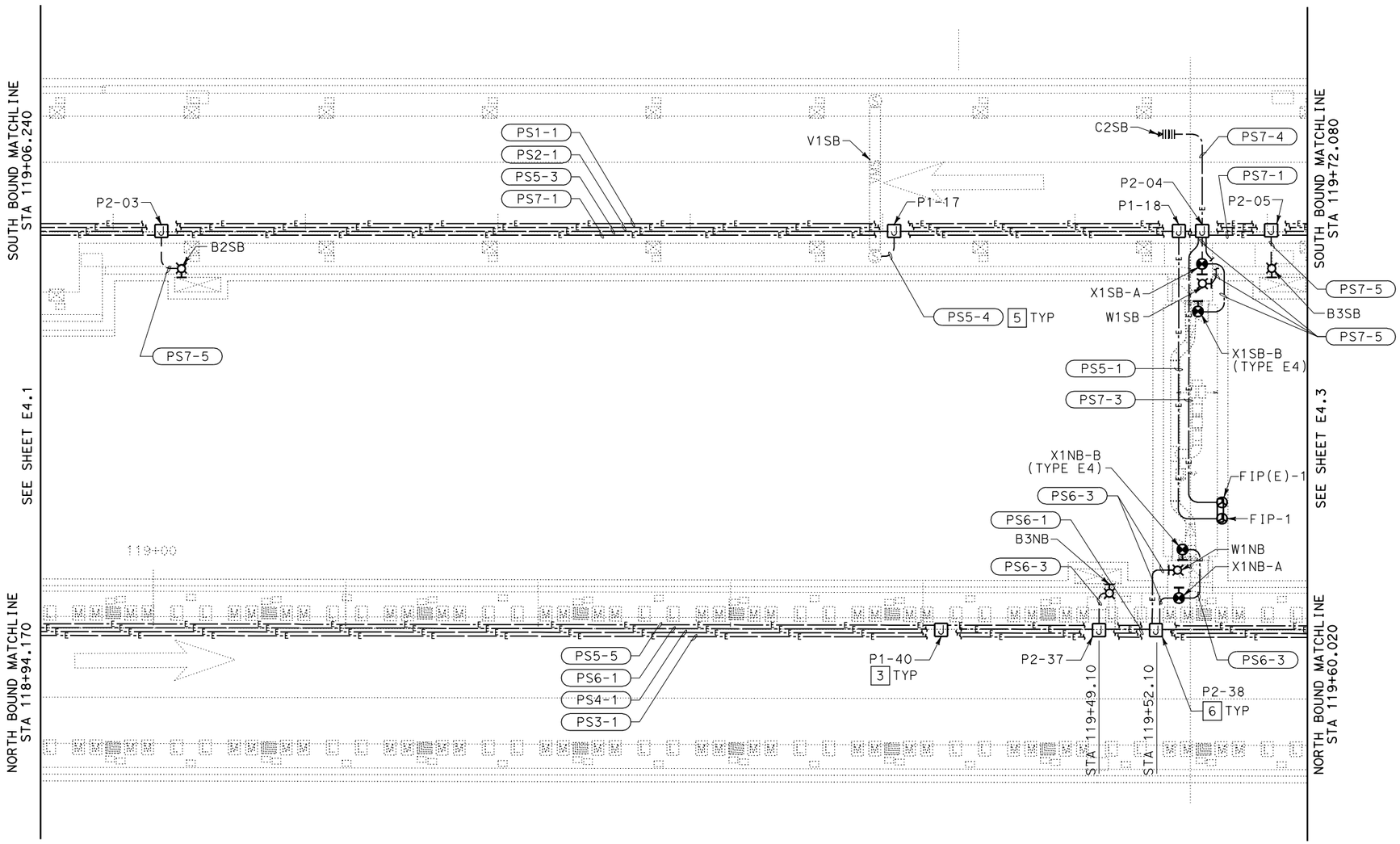

PLAN

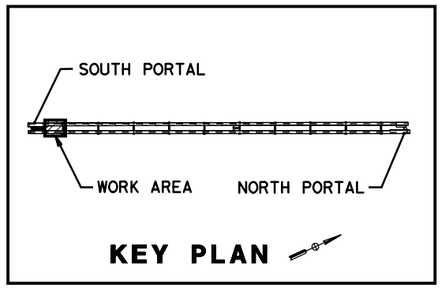

ALL DIMENSIONS ARE IN MILLIMETERS UNLESS OTHERWISE SHOWN

TUNNEL POWER PLAN NO. 2

SCALE 1:125

E4.2

PS&E SUBMITTAL (11/18/05)
NOT FOR CONSTRUCTION

CALCULATED/DESIGNED BY	P. WHOBREY	DATE REVISED BY	9/30/05
CHECKED BY	M. MAUNG	DATE REVISED	
DESIGN OVERSIGHT	BEHZAD GOLEMOHAMMADI		

STATE OF CALIFORNIA - DEPARTMENT OF TRANSPORTATION
Caltrans
ELECTRICAL

LAST REVISION 00-00-00
DATE PLOTTED => 29-NOV-2005
TIME PLOTTED => 09:51

RELATIVE BORDER SCALE IS IN MILLIMETERS 0 20 40 60 80

USERNAME => LBragg
DGN FILE => 41123uza061.dgn

CU 04240

EA 1123U1

DIST	COUNTY	ROUTE	KILOMETER POST TOTAL PROJECT	SHEET No	TOTAL SHEETS
04	SM	1			

IDENTIFICATION STAMP
DIV. OF THE STATE ARCHITECT
SACRAMENTO REGIONAL OFFICE
02-107518
AC
DATE 11-15-05

Caltrans Metric

Min Maung 9/30/05
REGISTERED ELECTRICAL ENGINEER

REGISTERED PROFESSIONAL ENGINEER
MIN MAUNG
No. E012210
Exp. 09/30/06
ELECT
STATE OF CALIFORNIA

PLANS APPROVAL DATE

The State of California or its officers or agents shall not be responsible for the accuracy or completeness of electronic copies of this plan sheet.

HNTB *Corporation*
200 E. SANDPOINTE AVENUE, SUITE 200
SANTA ANA, CALIFORNIA 92707

Caltrans now has a web site! To get to the web site, go to: http://www.dot.ca.gov

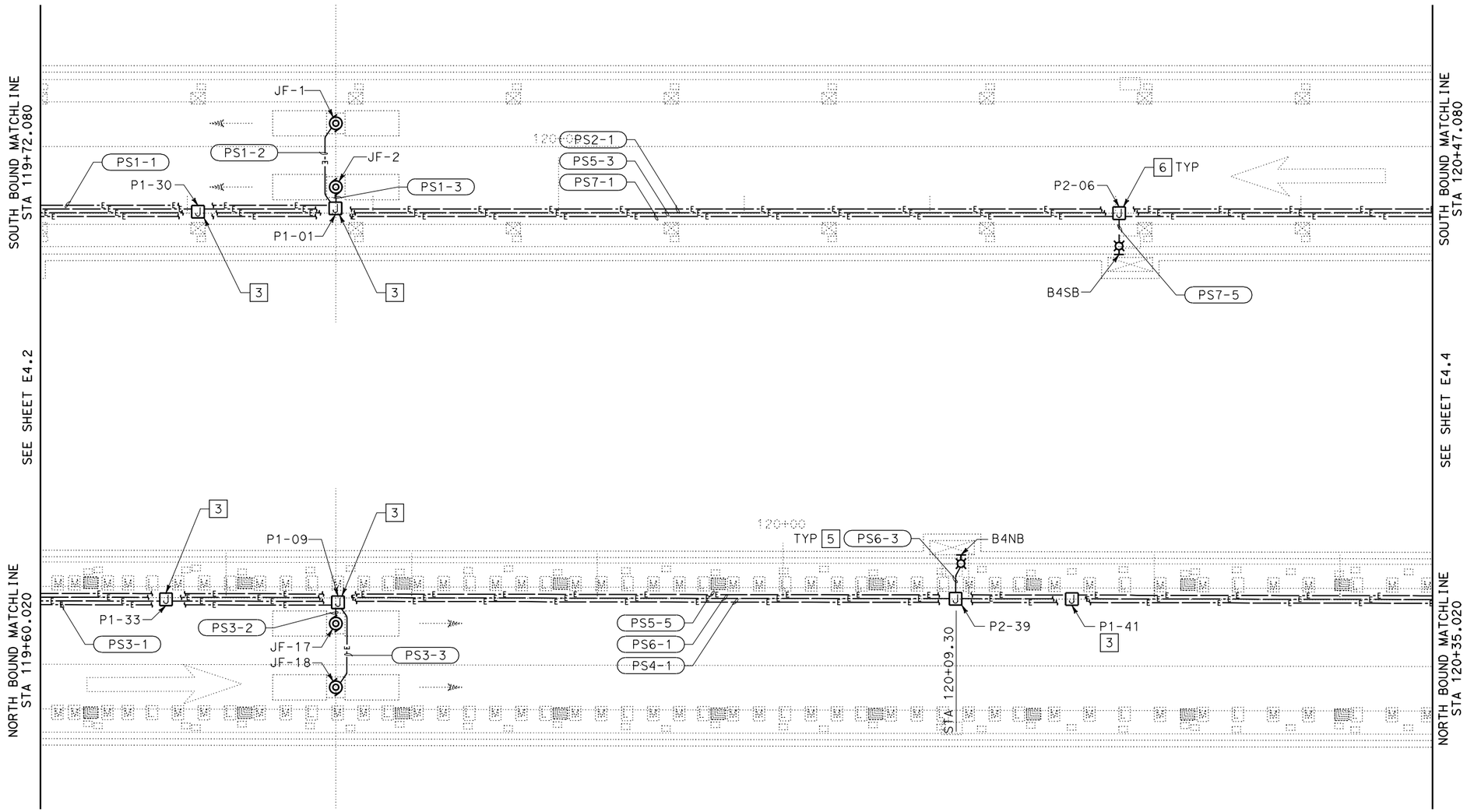

PLAN

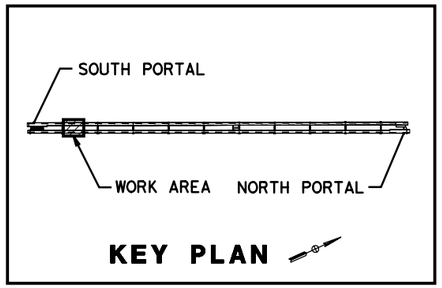

KEY PLAN

ALL DIMENSIONS ARE IN MILLIMETERS UNLESS OTHERWISE SHOWN

TUNNEL POWER PLAN NO. 3

SCALE 1:125

E4.3

PS&E SUBMITTAL (11/18/05)
NOT FOR CONSTRUCTION

	DATE	REVISED BY	DATE REVISED
CALCULATED/DESIGNED BY	P. WHOBREY		
CHECKED BY	M. MAUNG		9/30/05

DESIGN OVERSIGHT
BEHZAD GOLEMOHAMMADI

STATE OF CALIFORNIA - DEPARTMENT OF TRANSPORTATION
Caltrans
ELECTRICAL

LAST REVISION 00-00-00
DATE PLOTTED => 29-NOV-2005
TIME PLOTTED => 09:53

RELATIVE BORDER SCALE IS IN MILLIMETERS 0 20 40 60 80

USERNAME => LBragg
DGN FILE => 41123uza062.dgn

CU 04240

EA 1123U1

IDENTIFICATION STAMP
DIV. OF THE STATE ARCHITECT
SACRAMENTO REGIONAL OFFICE
02-107518
AC
DATE 11-15-05

Caltrans Metric

DIST	COUNTY	ROUTE	KILOMETER POST TOTAL PROJECT	SHEET No	TOTAL SHEETS
04	SM	1			

Min Maung 9/30/05
REGISTERED ELECTRICAL ENGINEER

PLANS APPROVAL DATE

REGISTERED PROFESSIONAL ENGINEER
MIN MAUNG
No. E012210
Exp. 09/30/06
ELECT
STATE OF CALIFORNIA

The State of California or its officers or agents shall not be responsible for the accuracy or completeness of electronic copies of this plan sheet.

HNTB *Corporation*
200 E. SANDPOINTE AVENUE, SUITE 200
SANTA ANA, CALIFORNIA 92707

Caltrans now has a web site! To get to the web site, go to: http://www.dot.ca.gov

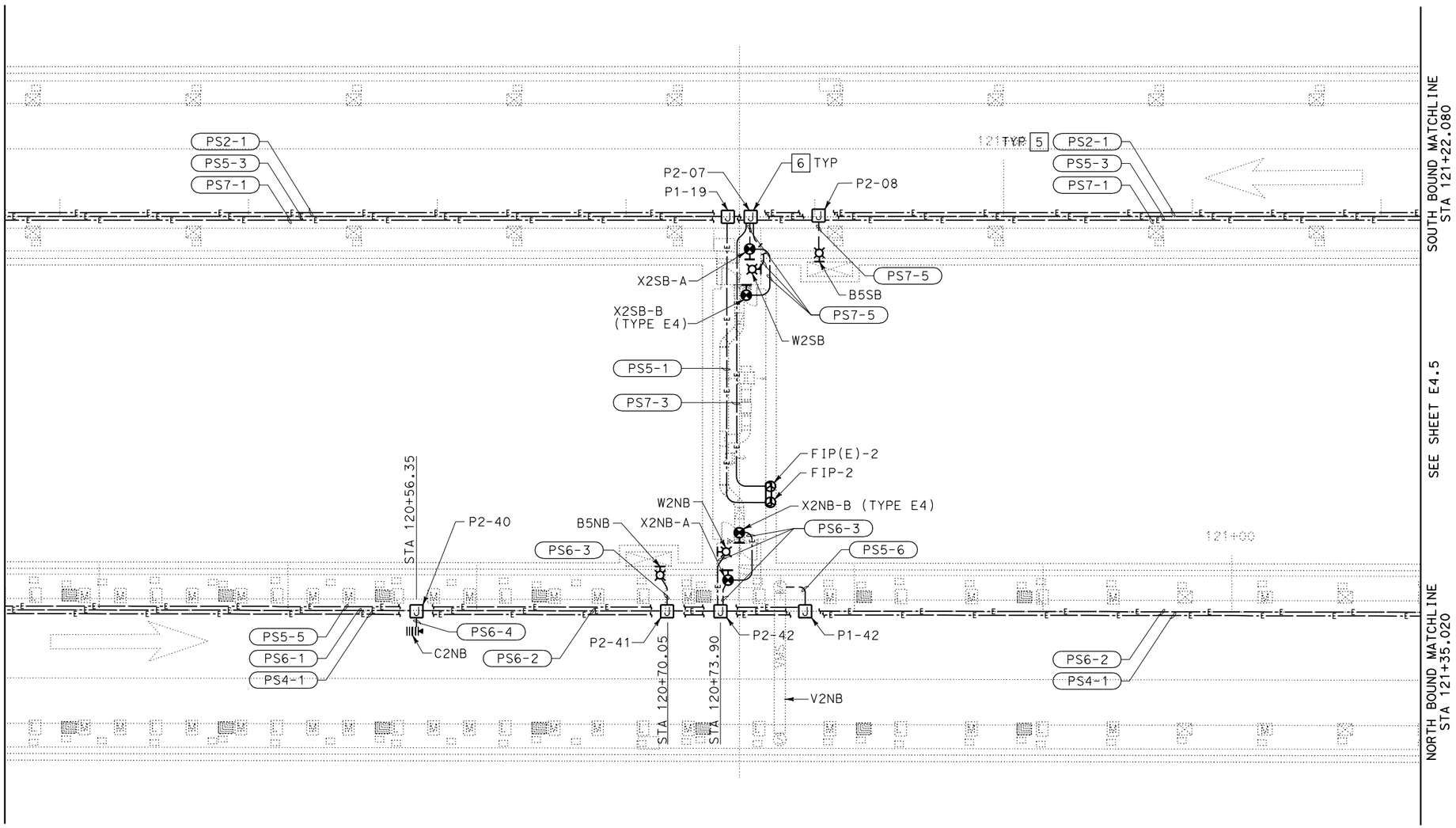

PLAN

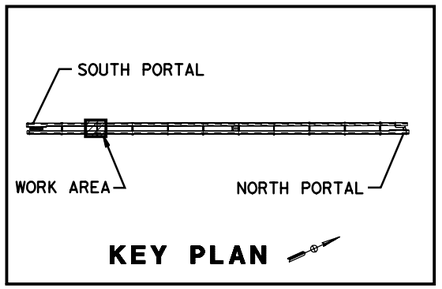

ALL DIMENSIONS ARE IN
MILLIMETERS UNLESS OTHERWISE SHOWN

TUNNEL POWER
PLAN NO. 4
SCALE 1:125

E4.4

PS&E SUBMITTAL (11/18/05)
NOT FOR CONSTRUCTION

	DATE	REVISED BY	DATE REVISED
CALCULATED/DESIGNED BY	P. WHOBREY		
CHECKED BY	M. MAUNG	9/30/05	
DESIGN OVERSIGHT	BEHZAD GOLEMOHAMMADI		

STATE OF CALIFORNIA - DEPARTMENT OF TRANSPORTATION
Caltrans
ELECTRICAL

RELATIVE BORDER SCALE IS IN MILLIMETERS 0 20 40 60 80

USERNAME => LBragg
DGN FILE => 41123uza063.dgn

CU 04240 | EA 1123U1

LAST REVISION 00-00-00
DATE PLOTTED => 29-NOV-2005
TIME PLOTTED => 09:54

IDENTIFICATION STAMP
DIV. OF THE STATE ARCHITECT
SACRAMENTO REGIONAL OFFICE
02-107518
AC
DATE 11-15-05

Caltrans Metric

DIST	COUNTY	ROUTE	KILOMETER POST TOTAL PROJECT	SHEET No	TOTAL SHEETS
04	SM	1			

Min Maung 9/30/05
REGISTERED ELECTRICAL ENGINEER

PLANS APPROVAL DATE

REGISTERED PROFESSIONAL ENGINEER
MIN MAUNG
No. E012210
Exp. 09/30/06
ELECT
STATE OF CALIFORNIA

The State of California or its officers or agents shall not be responsible for the accuracy or completeness of electronic copies of this plan sheet.

HNTB *Corporation*
200 E. SANDPOINTE AVENUE, SUITE 200
SANTA ANA, CALIFORNIA 92707

Caltrans now has a web site! To get to the web site, go to: http://www.dot.ca.gov

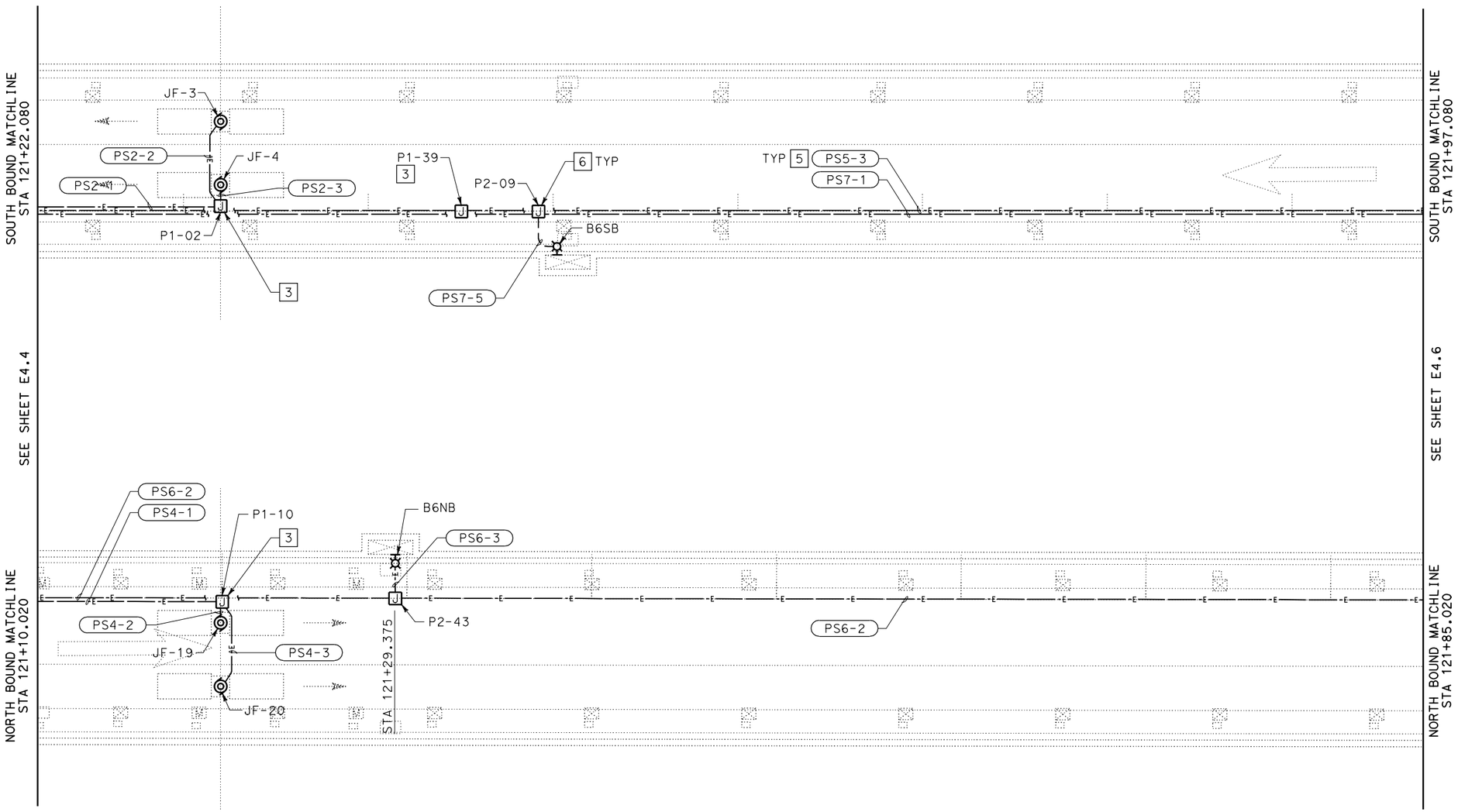

PLAN

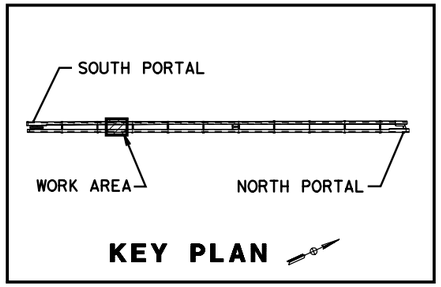

ALL DIMENSIONS ARE IN MILLIMETERS UNLESS OTHERWISE SHOWN

TUNNEL POWER PLAN NO. 5

SCALE 1:125

E4.5

PS&E SUBMITTAL (11/18/05)
NOT FOR CONSTRUCTION

STATE OF CALIFORNIA - DEPARTMENT OF TRANSPORTATION	DESIGN OVERSIGHT	CALCULATED/DESIGNED BY P. WHOBREY	REVISED BY
Caltrans	BEHZAD GOLEMOHAMMADI	CHECKED BY M. MAUNG	DATE REVISED 9/30/05

ELECTRICAL

LAST REVISION 00-00-00

DATE PLOTTED => 29-NOV-2005
TIME PLOTTED => 09:56

RELATIVE BORDER SCALE IS IN MILLIMETERS 0 20 40 60 80

USERNAME => LBragg
DGN FILE => 41123uza064.dgn

CU 04240

EA 1123U1

IDENTIFICATION STAMP
DIV. OF THE STATE ARCHITECT
SACRAMENTO REGIONAL OFFICE
02-107518
AC
DATE 11-15-05

Caltrans Metric

DIST	COUNTY	ROUTE	KILOMETER POST TOTAL PROJECT	SHEET No	TOTAL SHEETS
04	SM	1			

Min Maung 9/30/05
REGISTERED ELECTRICAL ENGINEER

PLANS APPROVAL DATE

REGISTERED PROFESSIONAL ENGINEER
MIN MAUNG
No. E012210
Exp. 09/30/06
ELECT
STATE OF CALIFORNIA

The State of California or its officers or agents shall not be responsible for the accuracy or completeness of electronic copies of this plan sheet.

HNTB *Corporation*
200 E. SANDPOINTE AVENUE, SUITE 200
SANTA ANA, CALIFORNIA 92707

Caltrans now has a web site! To get to the web site, go to: http://www.dot.ca.gov

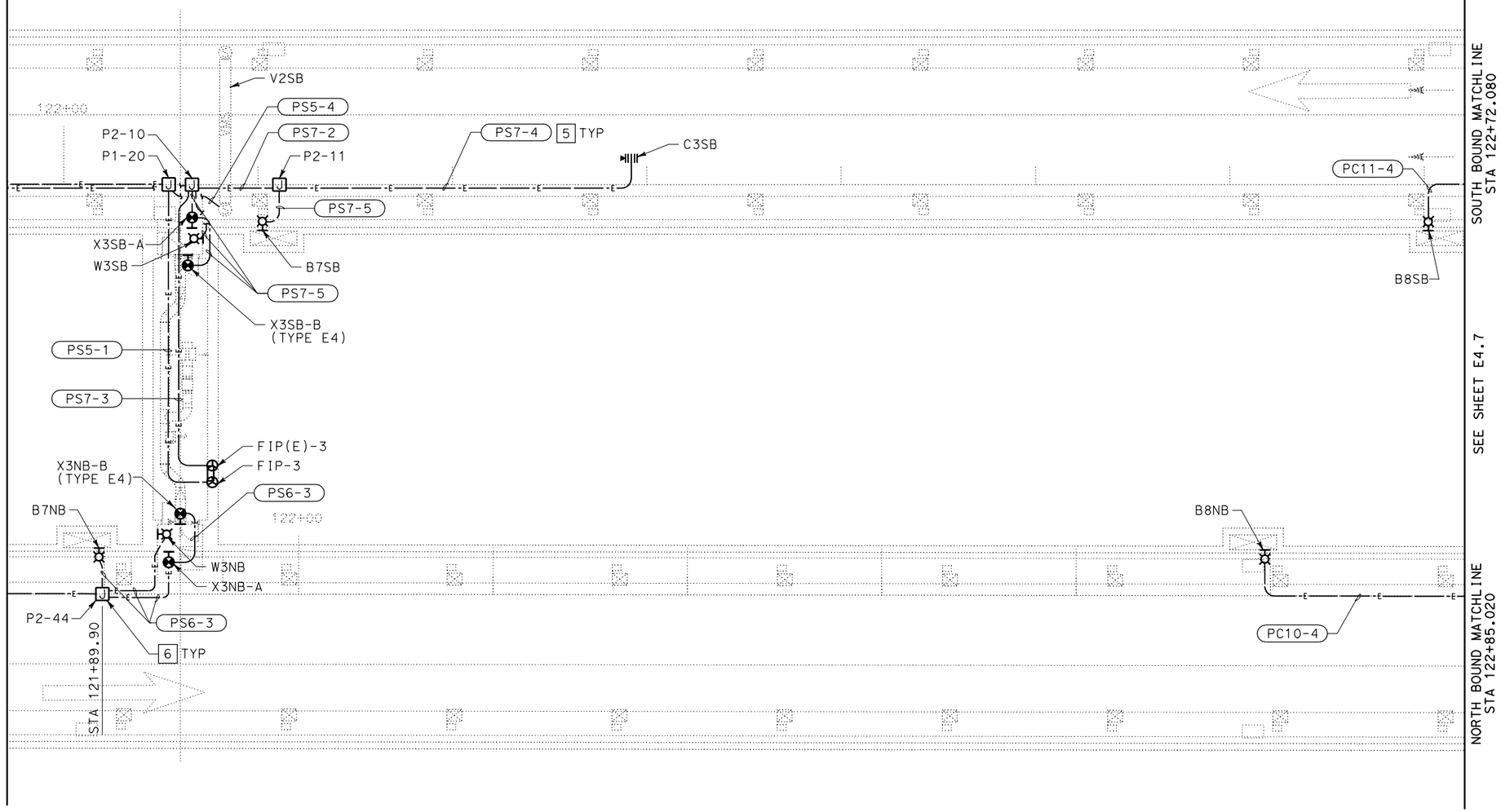

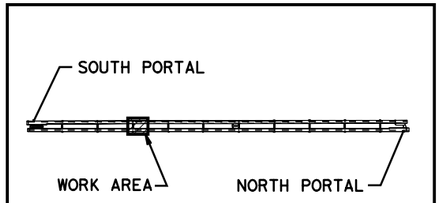

KEY PLAN

PLAN

PS&E SUBMITTAL (11/18/05)
NOT FOR CONSTRUCTION

ALL DIMENSIONS ARE IN MILLIMETERS UNLESS OTHERWISE SHOWN

TUNNEL POWER PLAN NO. 6

SCALE 1:125

E4.6

STATE OF CALIFORNIA - DEPARTMENT OF TRANSPORTATION
Caltrans
ELECTRICAL

DESIGN OVERSIGHT: BEHZAD GOLEMOHAMMADI
CALCULATED/DESIGNED BY: P. WHOBREY
CHECKED BY: M. MAUNG
DATE: 9/30/05
REVISED BY
DATE REVISED

LAST REVISION 00-00-00
DATE PLOTTED => 29-NOV-2005
TIME PLOTTED => 09:57

RELATIVE BORDER SCALE IS IN MILLIMETERS 0 20 40 60 80
USERNAME => LBragg
DGN FILE => 41123uza065.dgn
CU 04240
EA 1123U1

IDENTIFICATION STAMP
DIV. OF THE STATE ARCHITECT
SACRAMENTO REGIONAL OFFICE
02-107518
AC
DATE 11-15-05

Caltrans Metric

DIST	COUNTY	ROUTE	KILOMETER POST TOTAL PROJECT	SHEET No	TOTAL SHEETS
04	SM	1			

Min Maung 9/30/05
REGISTERED ELECTRICAL ENGINEER

PLANS APPROVAL DATE

REGISTERED PROFESSIONAL ENGINEER
MIN MAUNG
No. E012210
Exp. 09/30/06
ELECT
STATE OF CALIFORNIA

The State of California or its officers or agents shall not be responsible for the accuracy or completeness of electronic copies of this plan sheet.

HNTB *Corporation*
200 E. SANDPOINTE AVENUE, SUITE 200
SANTA ANA, CALIFORNIA 92707

Caltrans now has a web site! To get to the web site, go to: http://www.dot.ca.gov

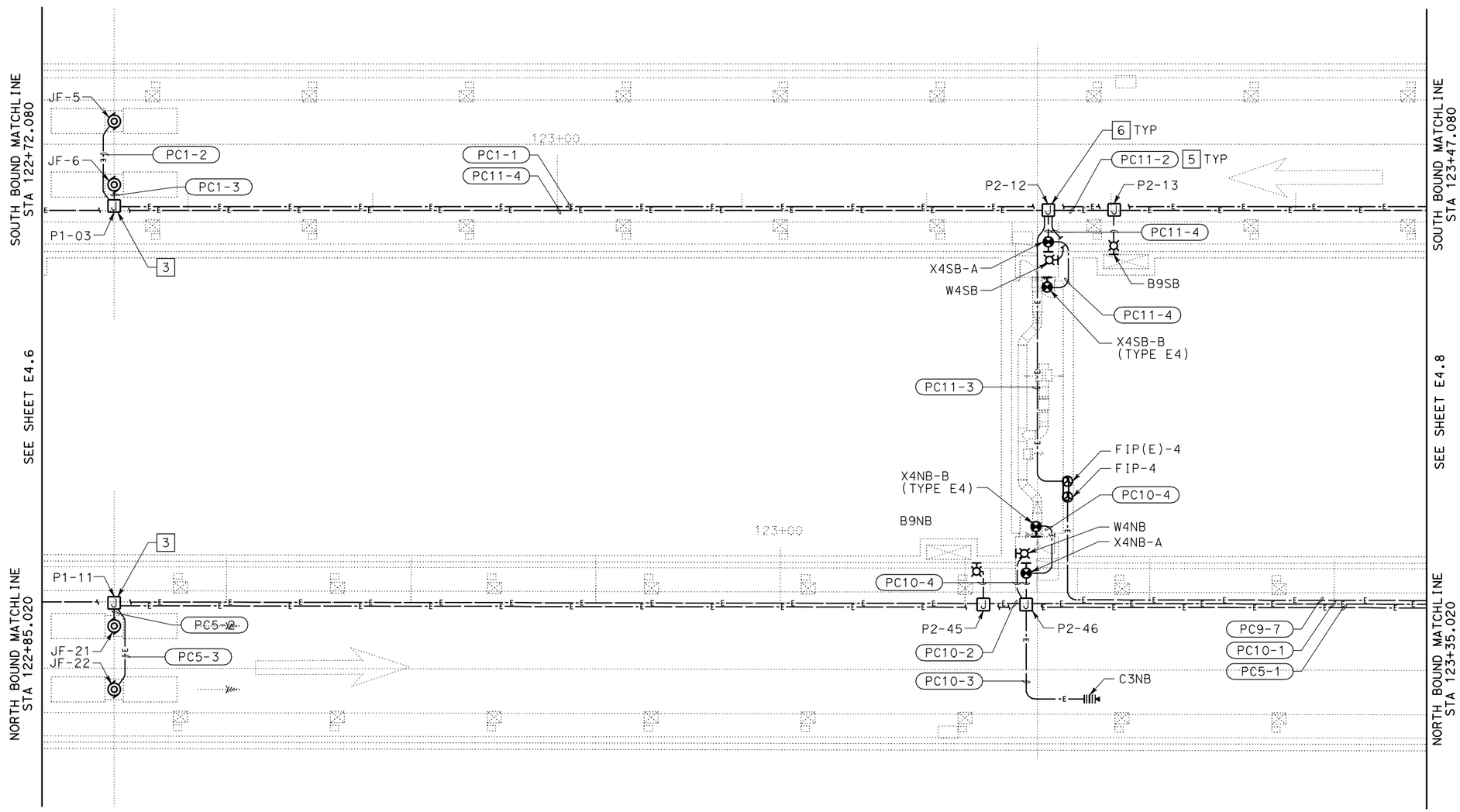

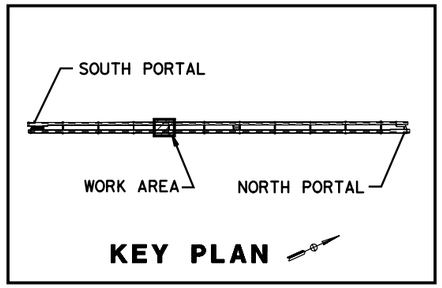

KEY PLAN

PLAN

ALL DIMENSIONS ARE IN MILLIMETERS UNLESS OTHERWISE SHOWN

TUNNEL POWER PLAN NO. 7

SCALE 1:125

E4.7

PS&E SUBMITTAL (11/18/05)
NOT FOR CONSTRUCTION

STATE OF CALIFORNIA - DEPARTMENT OF TRANSPORTATION
Caltrans
ELECTRICAL

CALCULATED/ DESIGNED BY	P. WHOBREY	DATE	REVISED BY
CHECKED BY	M. MAUNG	9/30/05	DATE REVISED

DESIGN OVERSIGHT
BEHZAD GOLEMOHAMMADI

LAST REVISION 00-00-00
DATE PLOTTED => 29-NOV-2005
TIME PLOTTED => 09:58

RELATIVE BORDER SCALE IS IN MILLIMETERS 0 20 40 60 80

USERNAME => LBragg
DGN FILE => 41123uza066.dgn

CU 04240

EA 1123U1

IDENTIFICATION STAMP
DIV. OF THE STATE ARCHITECT
SACRAMENTO REGIONAL OFFICE
02-107518
AC
DATE 11-15-05

Caltrans Metric

DIST	COUNTY	ROUTE	KILOMETER POST TOTAL PROJECT	SHEET No	TOTAL SHEETS
04	SM	1			

Min Maung 9/30/05
REGISTERED ELECTRICAL ENGINEER

PLANS APPROVAL DATE

REGISTERED PROFESSIONAL ENGINEER
MIN MAUNG
No. E012210
Exp. 09/30/06
ELECT
STATE OF CALIFORNIA

The State of California or its officers or agents shall not be responsible for the accuracy or completeness of electronic copies of this plan sheet.

HNTB *Corporation*
200 E. SANDPOINTE AVENUE, SUITE 200
SANTA ANA, CALIFORNIA 92707

Caltrans now has a web site! To get to the web site, go to: http://www.dot.ca.gov

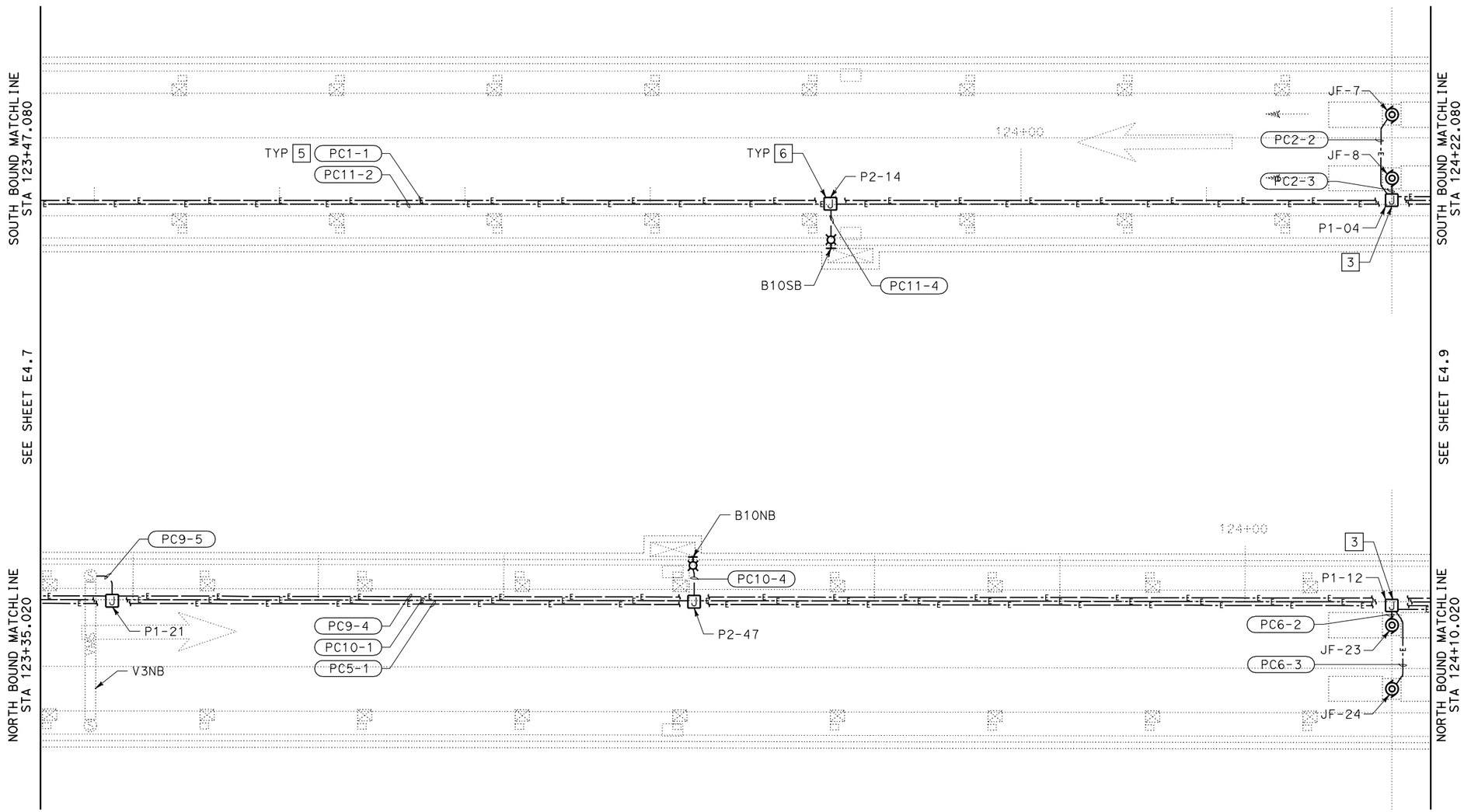

PLAN

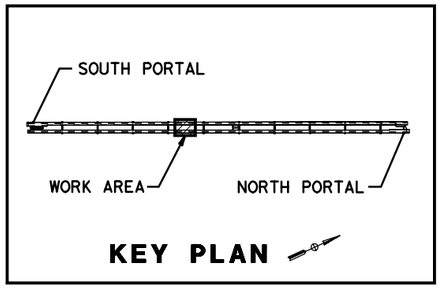

ALL DIMENSIONS ARE IN MILLIMETERS UNLESS OTHERWISE SHOWN

TUNNEL POWER PLAN NO. 8

SCALE 1:125

E4.8

PS&E SUBMITTAL (11/18/05)
NOT FOR CONSTRUCTION

STATE OF CALIFORNIA - DEPARTMENT OF TRANSPORTATION
Caltrans
ELECTRICAL

DESIGN OVERSIGHT: BEHZAD GOLEMOHAMMADI

CALCULATED/DESIGNED BY: P. WHOBREY
CHECKED BY: M. MAUNG

REVISED BY	DATE	DATE REVISED
	9/30/05	

RELATIVE BORDER SCALE IS IN MILLIMETERS 0 20 40 60 80

USERNAME => LBragg
DGN FILE => 41123uza067.dgn

CU 04240
EA 1123U1

LAST REVISION 00-00-00
DATE PLOTTED => 29-NOV-2005
TIME PLOTTED => 09:59

IDENTIFICATION STAMP
DIV. OF THE STATE ARCHITECT
SACRAMENTO REGIONAL OFFICE
02-107518
AC
DATE 11-15-05

Caltrans Metric

DIST	COUNTY	ROUTE	KILOMETER POST TOTAL PROJECT	SHEET No	TOTAL SHEETS
04	SM	1			

Min Maung 9/30/05
REGISTERED ELECTRICAL ENGINEER

PLANS APPROVAL DATE

REGISTERED PROFESSIONAL ENGINEER
MIN MAUNG
No. E012210
Exp. 09/30/06
ELECT
STATE OF CALIFORNIA

The State of California or its officers or agents shall not be responsible for the accuracy or completeness of electronic copies of this plan sheet.

HNTB *Corporation*
200 E. SANDPOINTE AVENUE, SUITE 200
SANTA ANA, CALIFORNIA 92707

Caltrans now has a web site! To get to the web site, go to: http://www.dot.ca.gov

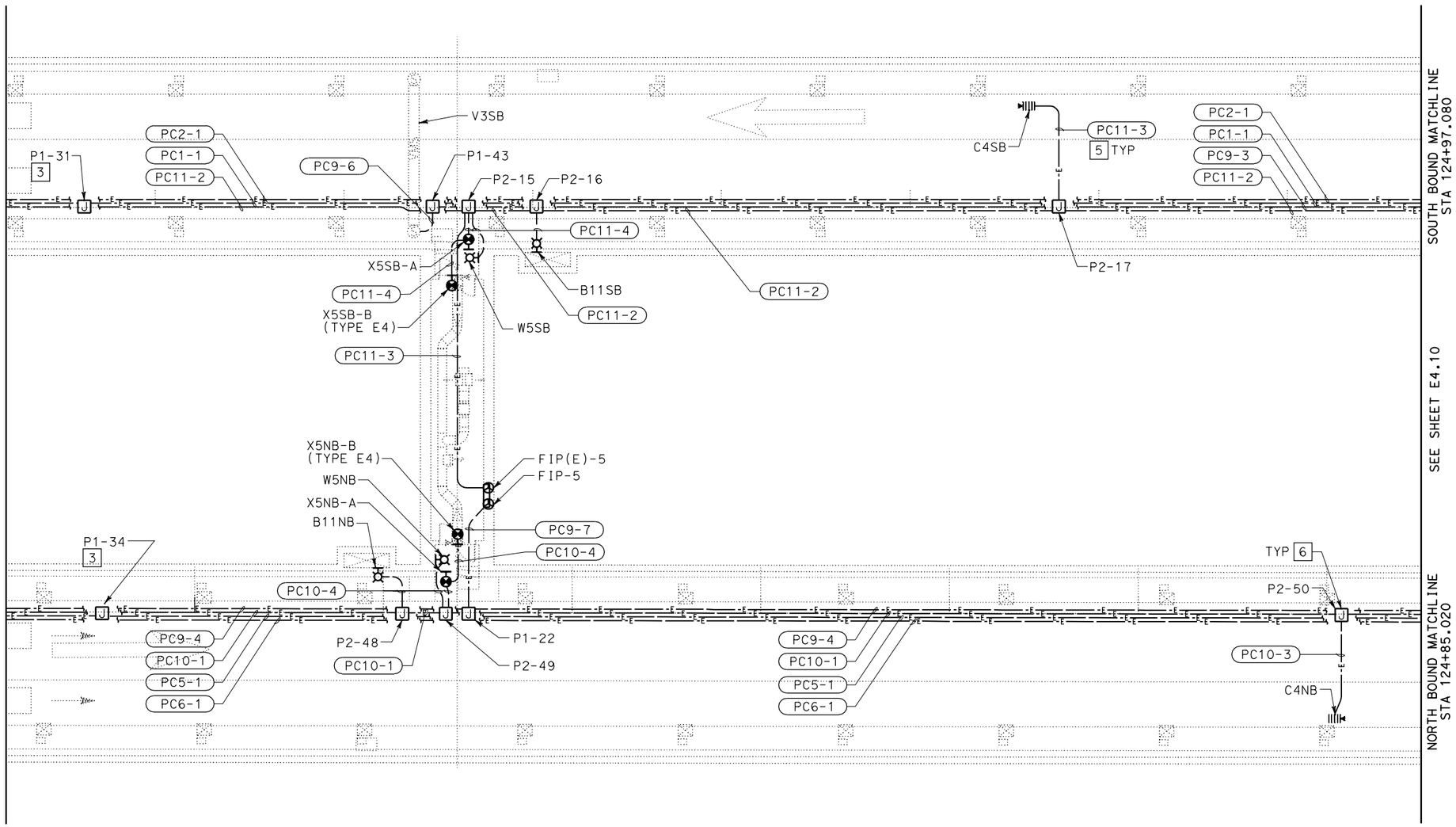

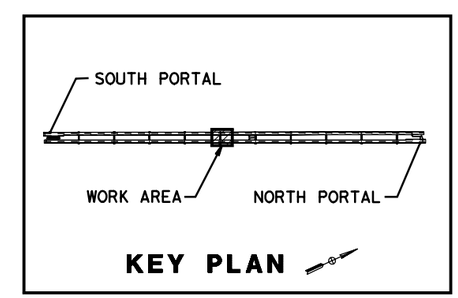

PLAN

PS&E SUBMITTAL (11/18/05)
NOT FOR CONSTRUCTION

ALL DIMENSIONS ARE IN MILLIMETERS UNLESS OTHERWISE SHOWN

TUNNEL POWER PLAN NO. 9

SCALE 1:125

E4.9

CALCULATED/DESIGNED BY	P. WHOBREY	DATE REVISED BY	9/30/05
CHECKED BY	M. MAUNG	DATE REVISED	
DESIGN OVERSIGHT	BEHZAD GOLEMOHAMMADI		

STATE OF CALIFORNIA - DEPARTMENT OF TRANSPORTATION
Caltrans
ELECTRICAL

LAST REVISION 00-00-00
DATE PLOTTED => 29-NOV-2005
TIME PLOTTED => 10:00

RELATIVE BORDER SCALE IS IN MILLIMETERS 0 20 40 60 80

USERNAME => LBragg
DGN FILE => 41123uza068.dgn

CU 04240

EA 1123U1

IDENTIFICATION STAMP
DIV. OF THE STATE ARCHITECT
SACRAMENTO REGIONAL OFFICE
02-107518
AC
DATE 11-15-05

Caltrans Metric

DIST	COUNTY	ROUTE	KILOMETER POST TOTAL PROJECT	SHEET No	TOTAL SHEETS
04	SM	1			

Min Maung 9/30/05
REGISTERED ELECTRICAL ENGINEER

PLANS APPROVAL DATE

REGISTERED PROFESSIONAL ENGINEER
MIN MAUNG
No. E012210
Exp. 09/30/06
ELECT
STATE OF CALIFORNIA

The State of California or its officers or agents shall not be responsible for the accuracy or completeness of electronic copies of this plan sheet.

HNTB *Corporation*
200 E. SANDPOINTE AVENUE, SUITE 200
SANTA ANA, CALIFORNIA 92707

Caltrans now has a web site! To get to the web site, go to: http://www.dot.ca.gov

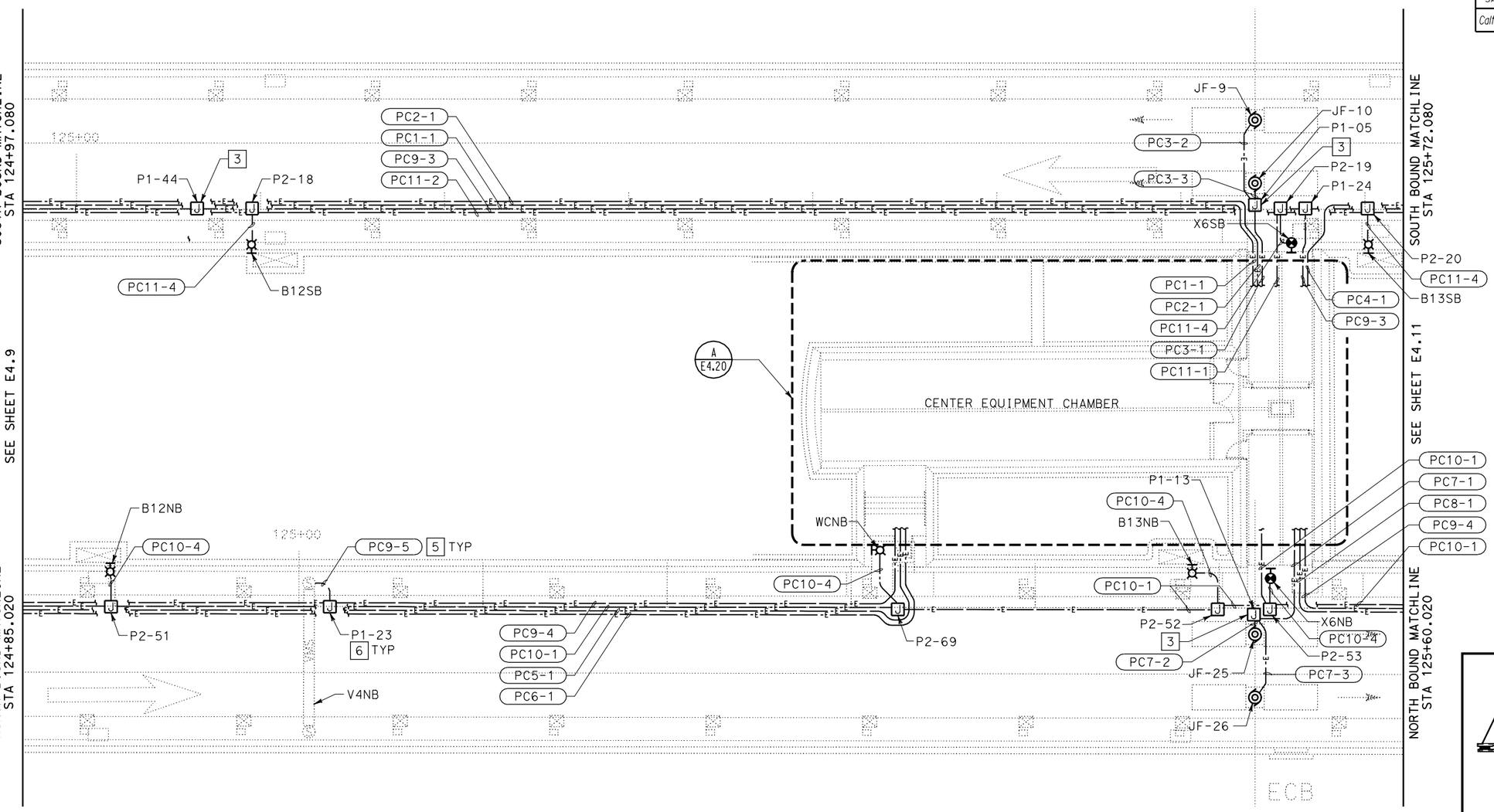

PLAN

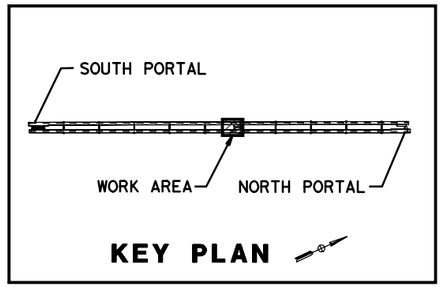

ALL DIMENSIONS ARE IN MILLIMETERS UNLESS OTHERWISE SHOWN

TUNNEL POWER PLAN NO. 10

SCALE 1:125

E4.10

PS&E SUBMITTAL (11/18/05)
NOT FOR CONSTRUCTION

	DATE	REVISED BY	DATE REVISED
CALCULATED/DESIGNED BY	P. WHOBREY		
CHECKED BY	M. MAUNG	9/30/05	

DESIGN OVERSIGHT
BEHZAD GOLEMOHAMMADI

STATE OF CALIFORNIA - DEPARTMENT OF TRANSPORTATION
Caltrans
ELECTRICAL

RELATIVE BORDER SCALE IS IN MILLIMETERS 0 20 40 60 80

USERNAME => LBragg
DGN FILE => 41123uza069.dgn

CU 04240

EA 1123U1

LAST REVISION 00-00-00
DATE PLOTTED => 29-NOV-2005
TIME PLOTTED => 10:02

DIST	COUNTY	ROUTE	KILOMETER POST TOTAL PROJECT	SHEET No	TOTAL SHEETS
04	SM	1			

Min Maung 9/30/05
REGISTERED ELECTRICAL ENGINEER

PLANS APPROVAL DATE

REGISTERED PROFESSIONAL ENGINEER MIN MAUNG No. E012210 Exp. 09/30/06 ELECT STATE OF CALIFORNIA

The State of California or its officers or agents shall not be responsible for the accuracy or completeness of electronic copies of this plan sheet.

HNTB *Corporation*
200 E. SANDPOINTE AVENUE, SUITE 200
SANTA ANA, CALIFORNIA 92707

Caltrans now has a web site! To get to the web site, go to: http://www.dot.ca.gov

IDENTIFICATION STAMP
DIV. OF THE STATE ARCHITECT
SACRAMENTO REGIONAL OFFICE
02-107518
AC
DATE 11-15-05

Caltrans Metric

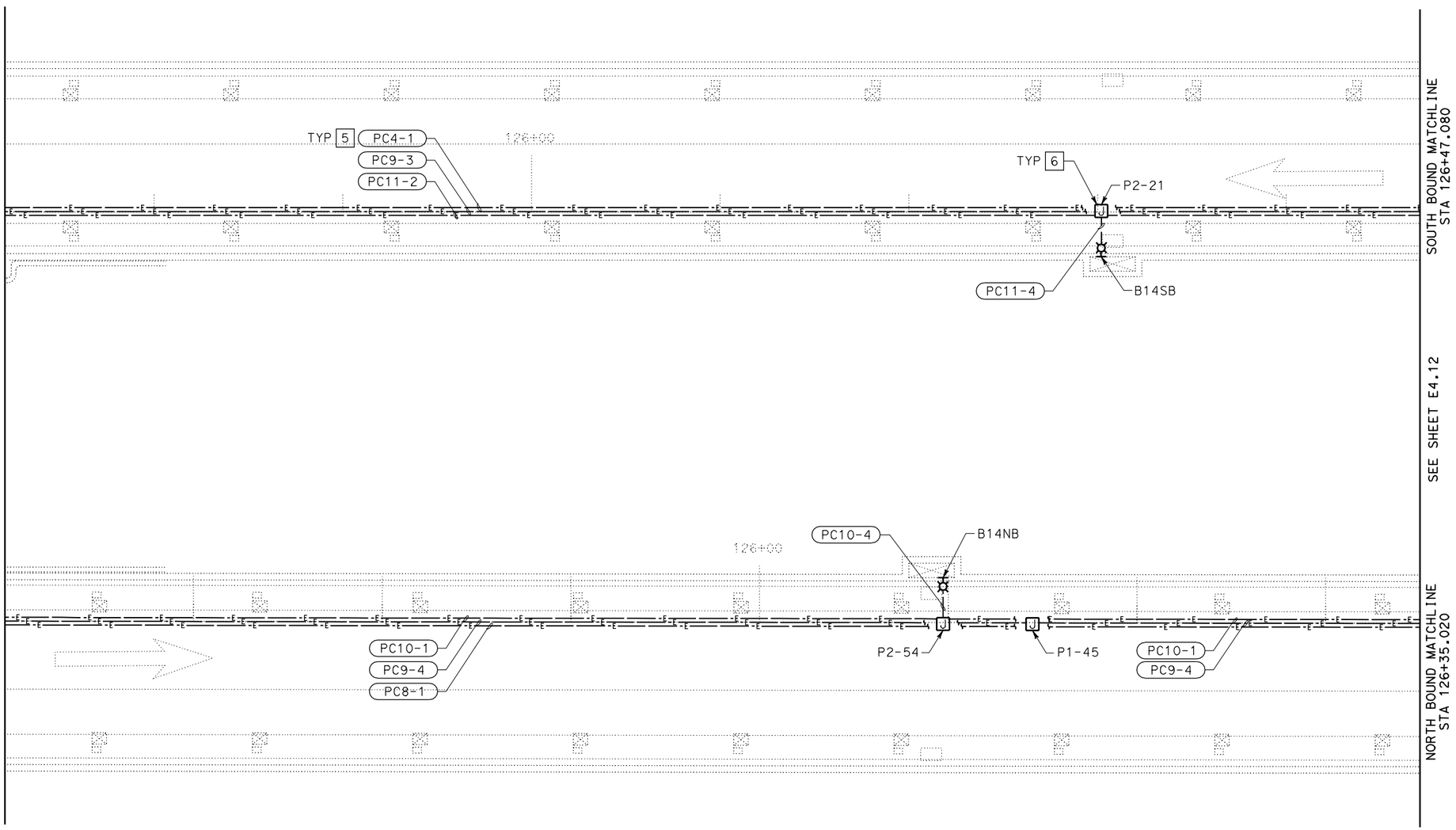

PLAN

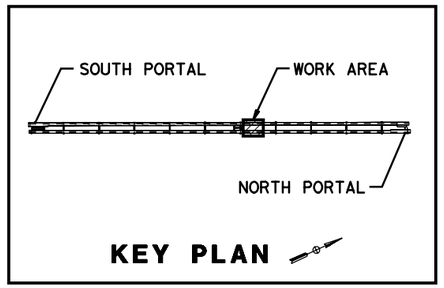

ALL DIMENSIONS ARE IN MILLIMETERS UNLESS OTHERWISE SHOWN

TUNNEL POWER PLAN NO.11

SCALE 1:125

E4.11

PS&E SUBMITTAL (11/18/05)
NOT FOR CONSTRUCTION

STATE OF CALIFORNIA - DEPARTMENT OF TRANSPORTATION
Caltrans
ELECTRICAL

DESIGN OVERSIGHT: BEHZAD GOLEMOHAMMADI
CALCULATED/DESIGNED BY: P. WHOBREY
CHECKED BY: M. MAUNG
DATE REVISED BY: 9/30/05
DATE REVISED

LAST REVISION 00-00-00
DATE PLOTTED => 29-NOV-2005
TIME PLOTTED => 10:03

RELATIVE BORDER SCALE IS IN MILLIMETERS 0 20 40 60 80
USERNAME => LBragg
DGN FILE => 41123uza070.dgn
CU 04240
EA 1123U1

IDENTIFICATION STAMP
DIV. OF THE STATE ARCHITECT
SACRAMENTO REGIONAL OFFICE
02-107518
AC
DATE 11-15-05

Caltrans Metric

DIST	COUNTY	ROUTE	KILOMETER POST TOTAL PROJECT	SHEET No	TOTAL SHEETS
04	SM	1			

Min Maung 9/30/05
REGISTERED ELECTRICAL ENGINEER

PLANS APPROVAL DATE

REGISTERED PROFESSIONAL ENGINEER
MIN MAUNG
No. E012210
Exp. 09/30/06
ELECT
STATE OF CALIFORNIA

The State of California or its officers or agents shall not be responsible for the accuracy or completeness of electronic copies of this plan sheet.

HNTB *Corporation*
200 E. SANDPOINTE AVENUE, SUITE 200
SANTA ANA, CALIFORNIA 92707

Caltrans now has a web site! To get to the web site, go to: http://www.dot.ca.gov

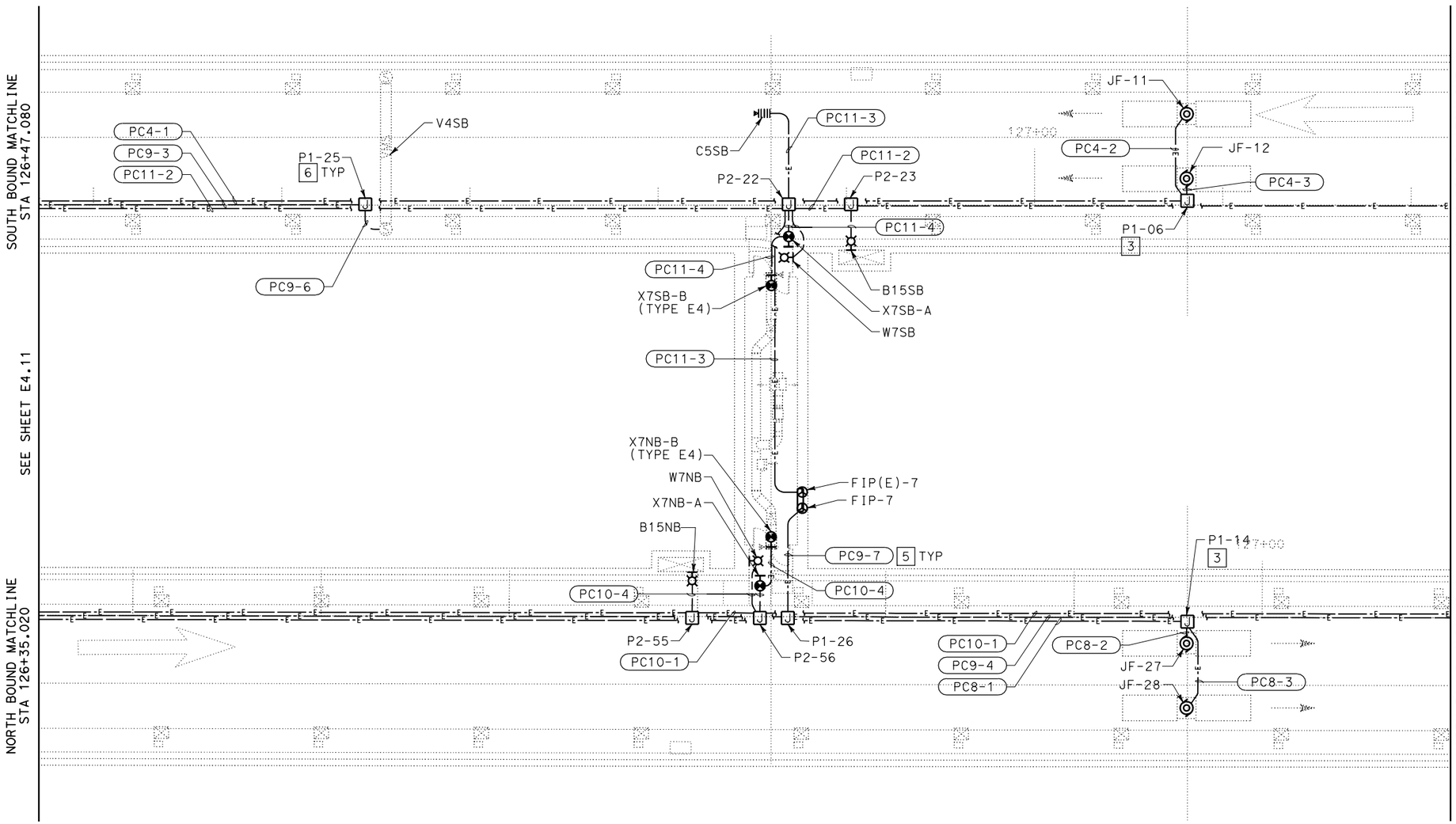

PLAN

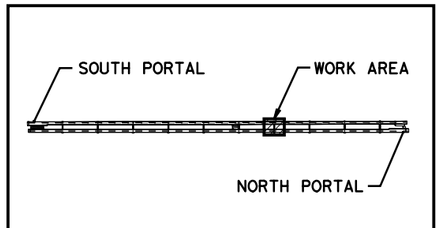

KEY PLAN

ALL DIMENSIONS ARE IN MILLIMETERS UNLESS OTHERWISE SHOWN

TUNNEL POWER PLAN NO. 12

SCALE 1:125

E4.12

PS&E SUBMITTAL (11/18/05)
NOT FOR CONSTRUCTION

STATE OF CALIFORNIA - DEPARTMENT OF TRANSPORTATION
Caltrans
ELECTRICAL

DESIGN OVERSIGHT: BEHZAD GOLEMOHAMMADI
CALCULATED/DESIGNED BY: P. WHOBREY
CHECKED BY: M. MAUNG
DATE: 9/30/05
REVISED BY
DATE REVISED

LAST REVISION 00-00-00
DATE PLOTTED => 29-NOV-2005
TIME PLOTTED => 10:04

RELATIVE BORDER SCALE IS IN MILLIMETERS 0 20 40 60 80

USERNAME => LBragg
DGN FILE => 41123uza071.dgn

CU 04240

EA 1123U1

DIST	COUNTY	ROUTE	KILOMETER POST TOTAL PROJECT	SHEET No	TOTAL SHEETS
04	SM	1			

IDENTIFICATION STAMP
DIV. OF THE STATE ARCHITECT
SACRAMENTO REGIONAL OFFICE
02-107518
AC
DATE 11-15-05

Caltrans Metric

Min Maung 9/30/05
REGISTERED ELECTRICAL ENGINEER

PLANS APPROVAL DATE

REGISTERED PROFESSIONAL ENGINEER
MIN MAUNG
No. E012210
Exp. 09/30/06
ELECT
STATE OF CALIFORNIA

The State of California or its officers or agents shall not be responsible for the accuracy or completeness of electronic copies of this plan sheet.

HNTB *Corporation*
200 E. SANDPOINTE AVENUE, SUITE 200
SANTA ANA, CALIFORNIA 92707

Caltrans now has a web site! To get to the web site, go to: http://www.dot.ca.gov

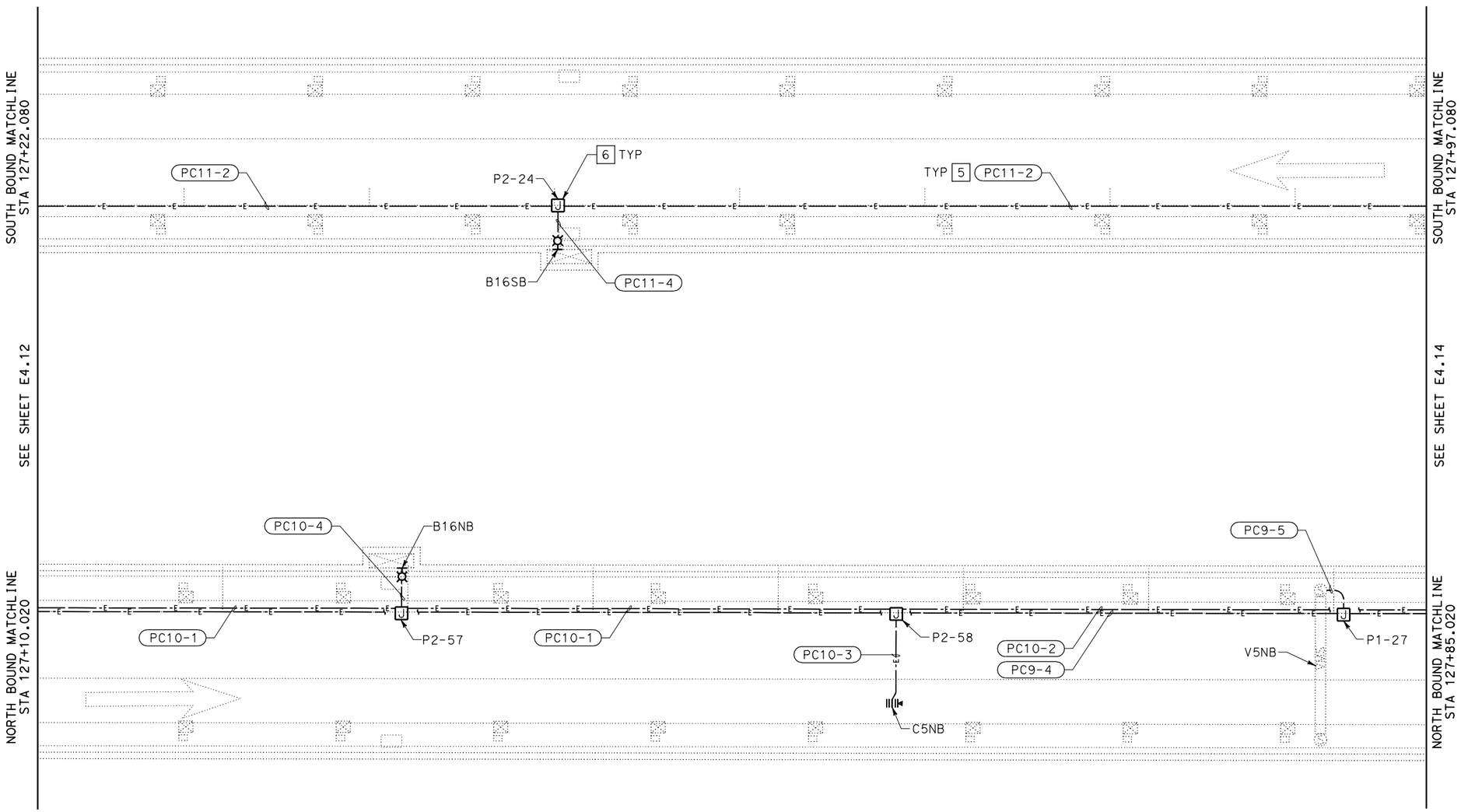

PLAN

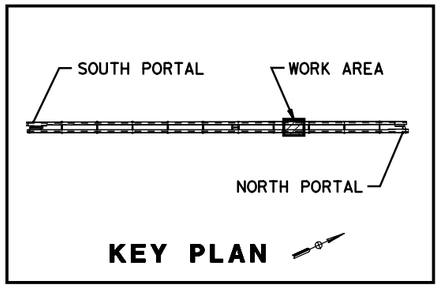

ALL DIMENSIONS ARE IN MILLIMETERS UNLESS OTHERWISE SHOWN

TUNNEL POWER PLAN NO. 13

SCALE 1:125

E4.13

PS&E SUBMITTAL (11/18/05)
NOT FOR CONSTRUCTION

STATE OF CALIFORNIA - DEPARTMENT OF TRANSPORTATION
Caltrans
ELECTRICAL

DESIGN OVERSIGHT: BEHZAD GOLEMOHAMMADI
CALCULATED/DESIGNED BY: P. WHOBREY
CHECKED BY: M. MAUNG
DATE REVISED BY: 9/30/05
DATE REVISED

LAST REVISION 00-00-00
DATE PLOTTED => 29-NOV-2005
TIME PLOTTED => 10:05

RELATIVE BORDER SCALE IS IN MILLIMETERS 0 20 40 60 80

USERNAME => LBragg
DGN FILE => 41123uza072.dgn

CU 04240
EA 1123U1

IDENTIFICATION STAMP
DIV. OF THE STATE ARCHITECT
SACRAMENTO REGIONAL OFFICE
02-107518
AC
DATE 11-15-05

Caltrans Metric

DIST	COUNTY	ROUTE	KILOMETER POST TOTAL PROJECT	SHEET No	TOTAL SHEETS
04	SM	1			

Min Maung 9/30/05
REGISTERED ELECTRICAL ENGINEER

PLANS APPROVAL DATE

REGISTERED PROFESSIONAL ENGINEER
MIN MAUNG
No. E012210
Exp. 09/30/06
ELECT
STATE OF CALIFORNIA

The State of California or its officers or agents shall not be responsible for the accuracy or completeness of electronic copies of this plan sheet.

HNTB *Corporation*
200 E. SANDPOINTE AVENUE, SUITE 200
SANTA ANA, CALIFORNIA 92707

Caltrans now has a web site! To get to the web site, go to: http://www.dot.ca.gov

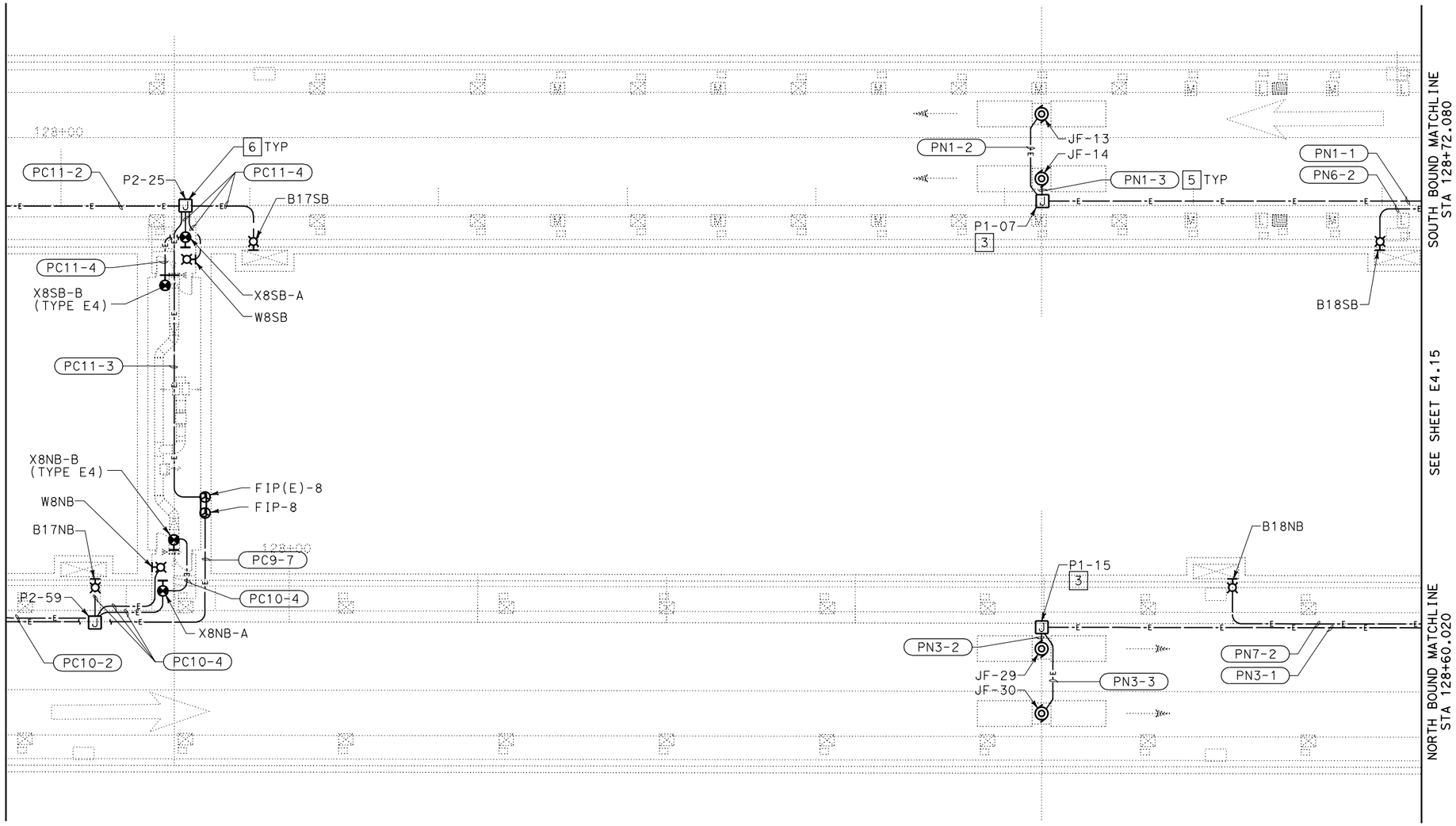

PLAN

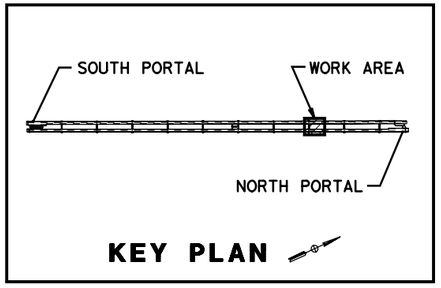

ALL DIMENSIONS ARE IN
MILLIMETERS UNLESS OTHERWISE SHOWN

TUNNEL POWER
PLAN NO. 14

SCALE 1:125

E4.14

PS&E SUBMITTAL (11/18/05)
NOT FOR CONSTRUCTION

	DATE	REVISED BY	DATE REVISED
CALCULATED/DESIGNED BY	P. WHOBREY		
CHECKED BY	M. MAUNG	9/30/05	
DESIGN OVERSIGHT	BEHZAD GOLEMOHAMMADI		

STATE OF CALIFORNIA - DEPARTMENT OF TRANSPORTATION
Caltrans
ELECTRICAL

LAST REVISION 00-00-00
DATE PLOTTED => 29-NOV-2005
TIME PLOTTED => 10:06

RELATIVE BORDER SCALE IS IN MILLIMETERS 0 20 40 60 80

USERNAME => LBragg
DGN FILE => 41123uza073.dgn

CU 04240

EA 1123U1

DIST	COUNTY	ROUTE	KILOMETER POST TOTAL PROJECT	SHEET No	TOTAL SHEETS
04	SM	1			

IDENTIFICATION STAMP
DIV. OF THE STATE ARCHITECT
SACRAMENTO REGIONAL OFFICE
02-107518
AC
DATE 11-15-05

Caltrans Metric

Min Maung 9/30/05
REGISTERED ELECTRICAL ENGINEER

REGISTERED PROFESSIONAL ENGINEER
MIN MAUNG
No. E012210
Exp. 09/30/06
ELECT
STATE OF CALIFORNIA

PLANS APPROVAL DATE

The State of California or its officers or agents shall not be responsible for the accuracy or completeness of electronic copies of this plan sheet.

HNTB *Corporation*
200 E. SANDPOINTE AVENUE, SUITE 200
SANTA ANA, CALIFORNIA 92707

Caltrans now has a web site! To get to the web site, go to: http://www.dot.ca.gov

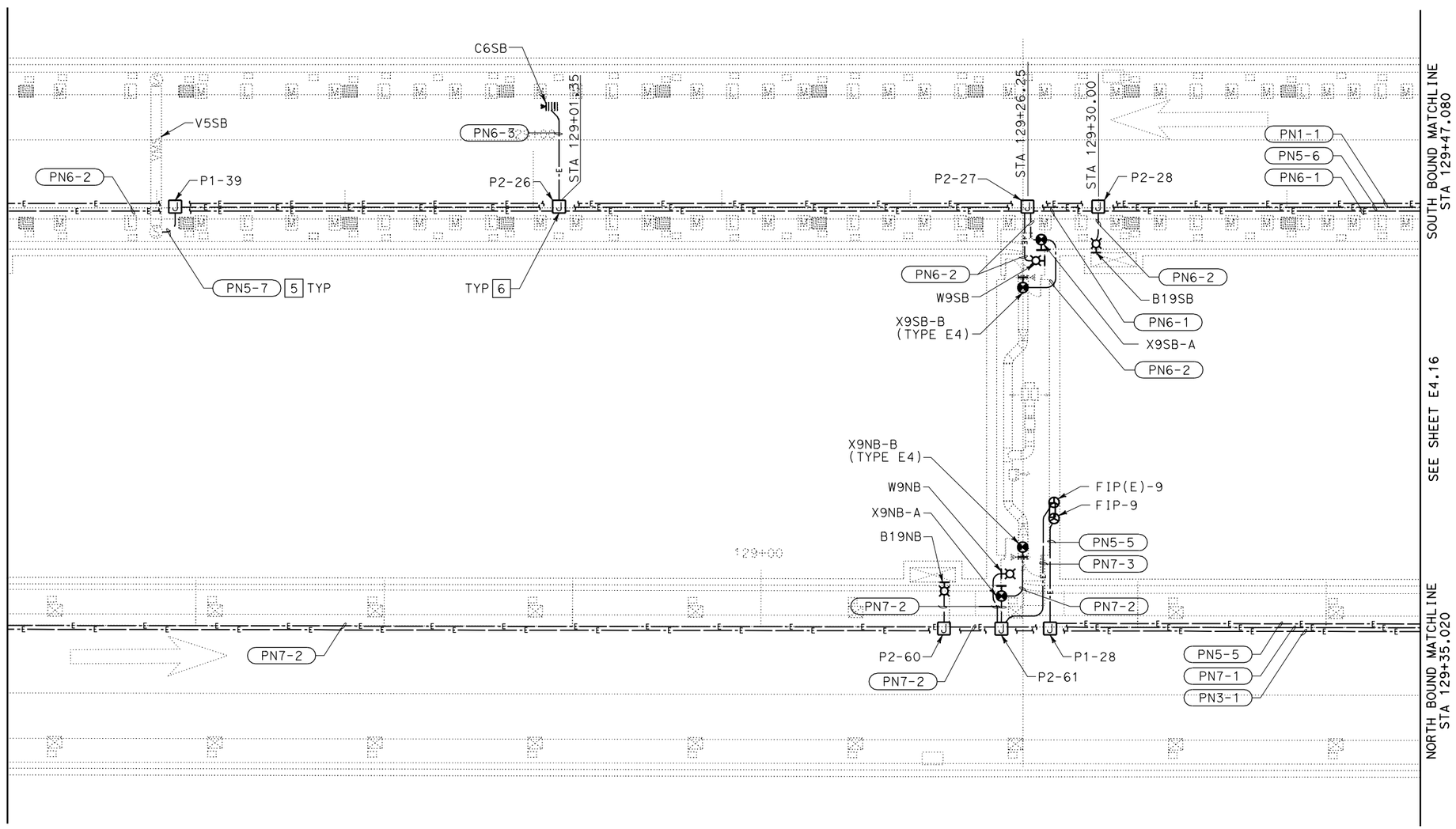

PLAN

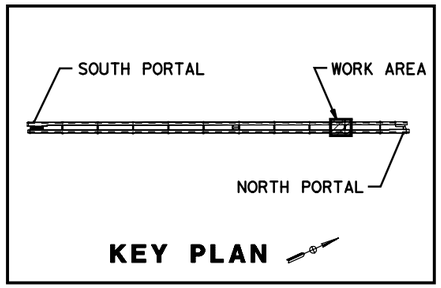

ALL DIMENSIONS ARE IN
MILLIMETERS UNLESS OTHERWISE SHOWN

TUNNEL POWER
PLAN NO. 15
SCALE 1:125

E4.15

PS&E SUBMITTAL (11/18/05)
NOT FOR CONSTRUCTION

	DATE	REVISED BY	DATE REVISED
CALCULATED/DESIGNED BY	P. WHOBREY		
CHECKED BY	M. MAUNG		

DESIGN OVERSIGHT
BEHZAD GOLEMOHAMMADI

STATE OF CALIFORNIA - DEPARTMENT OF TRANSPORTATION
Caltrans
ELECTRICAL

LAST REVISION 00-00-00
DATE PLOTTED => 29-NOV-2005
TIME PLOTTED => 10:07

RELATIVE BORDER SCALE IS IN MILLIMETERS 0 20 40 60 80
USERNAME => LBragg
DGN FILE => 41123uza074.dgn
CU 04240
EA 1123U1

DIST	COUNTY	ROUTE	KILOMETER POST TOTAL PROJECT	SHEET No	TOTAL SHEETS
04	SM	1			

Min Maung 9/30/05
REGISTERED ELECTRICAL ENGINEER

PLANS APPROVAL DATE

REGISTERED PROFESSIONAL ENGINEER MIN MAUNG No. E012210 Exp. 09/30/06 ELECT STATE OF CALIFORNIA

The State of California or its officers or agents shall not be responsible for the accuracy or completeness of electronic copies of this plan sheet.

HNTB *Corporation*
200 E. SANDPOINTE AVENUE, SUITE 200
SANTA ANA, CALIFORNIA 92707

Caltrans now has a web site! To get to the web site, go to: http://www.dot.ca.gov

Caltrans Metric

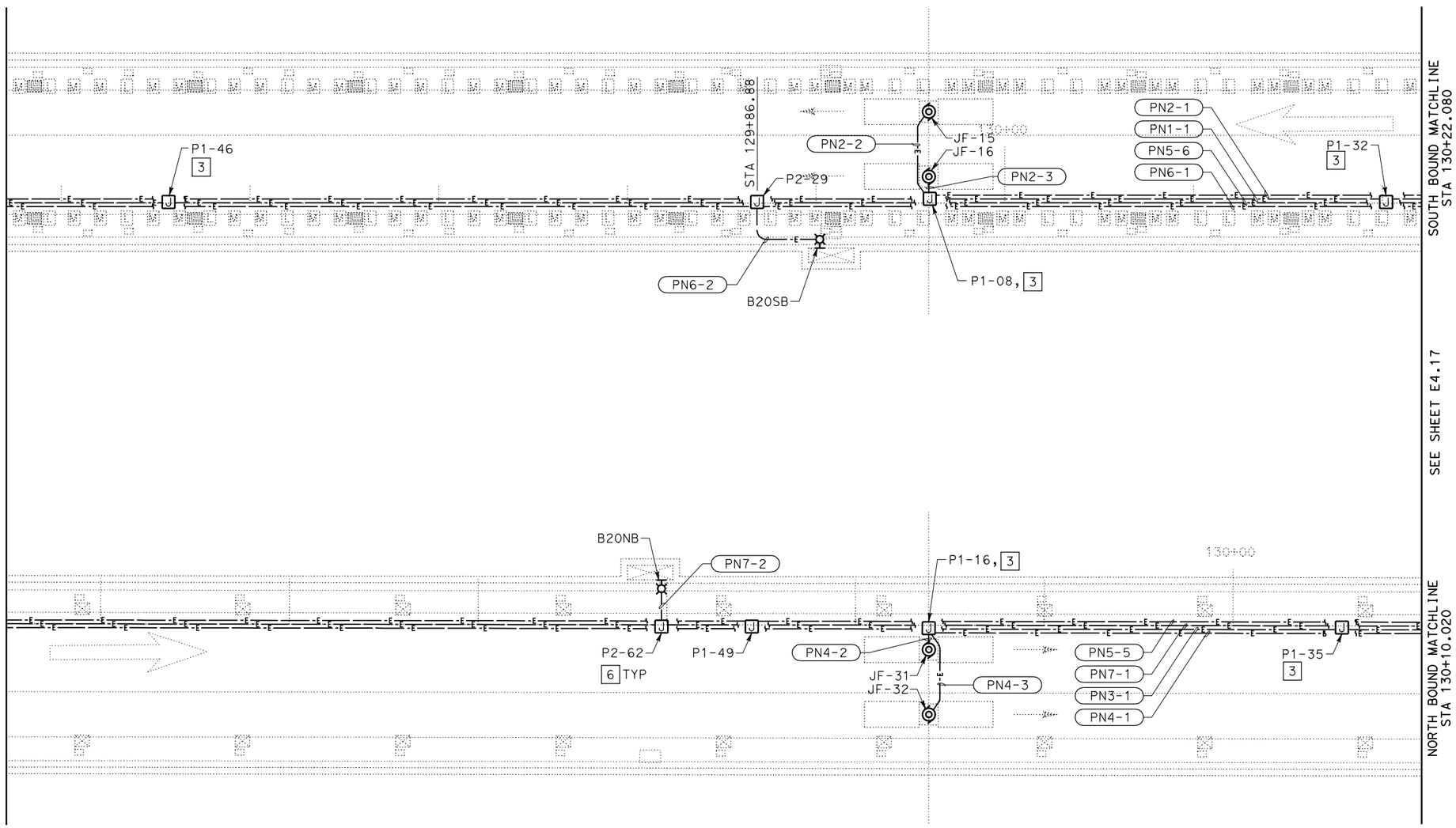

PLAN

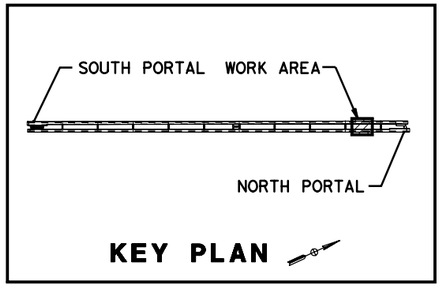

ALL DIMENSIONS ARE IN MILLIMETERS UNLESS OTHERWISE SHOWN

TUNNEL POWER PLAN NO. 16

SCALE 1:125

E4.16

PS&E SUBMITTAL (11/18/05)
NOT FOR CONSTRUCTION

STATE OF CALIFORNIA - DEPARTMENT OF TRANSPORTATION
Caltrans
ELECTRICAL

DESIGN OVERSIGHT: BEHZAD GOLEMOHAMMADI

CALCULATED/DESIGNED BY: P. WHOBREY
CHECKED BY: M. MAUNG

REVISED BY	DATE	DATE REVISED
	9/30/05	

RELATIVE BORDER SCALE IS IN MILLIMETERS 0 20 40 60 80

USERNAME => lGraham
DGN FILE => 41123uza075.dgn

CU 04240
EA 1123U1

LAST REVISION 00-00-00
DATE PLOTTED => 09-NOV-2005
TIME PLOTTED => 15:09

IDENTIFICATION STAMP
DIV. OF THE STATE ARCHITECT
SACRAMENTO REGIONAL OFFICE
02-107518
AC
DATE 11-15-05

Caltrans Metric

DIST	COUNTY	ROUTE	KILOMETER POST TOTAL PROJECT	SHEET No	TOTAL SHEETS
04	SM	1			

Min Maung 9/30/05
REGISTERED ELECTRICAL ENGINEER

PLANS APPROVAL DATE

REGISTERED PROFESSIONAL ENGINEER
MIN MAUNG
No. E012210
Exp. 09/30/06
ELECT
STATE OF CALIFORNIA

The State of California or its officers or agents shall not be responsible for the accuracy or completeness of electronic copies of this plan sheet.

HNTB *Corporation*
200 E. SANDPOINTE AVENUE, SUITE 200
SANTA ANA, CALIFORNIA 92707

Caltrans now has a web site! To get to the web site, go to: http://www.dot.ca.gov

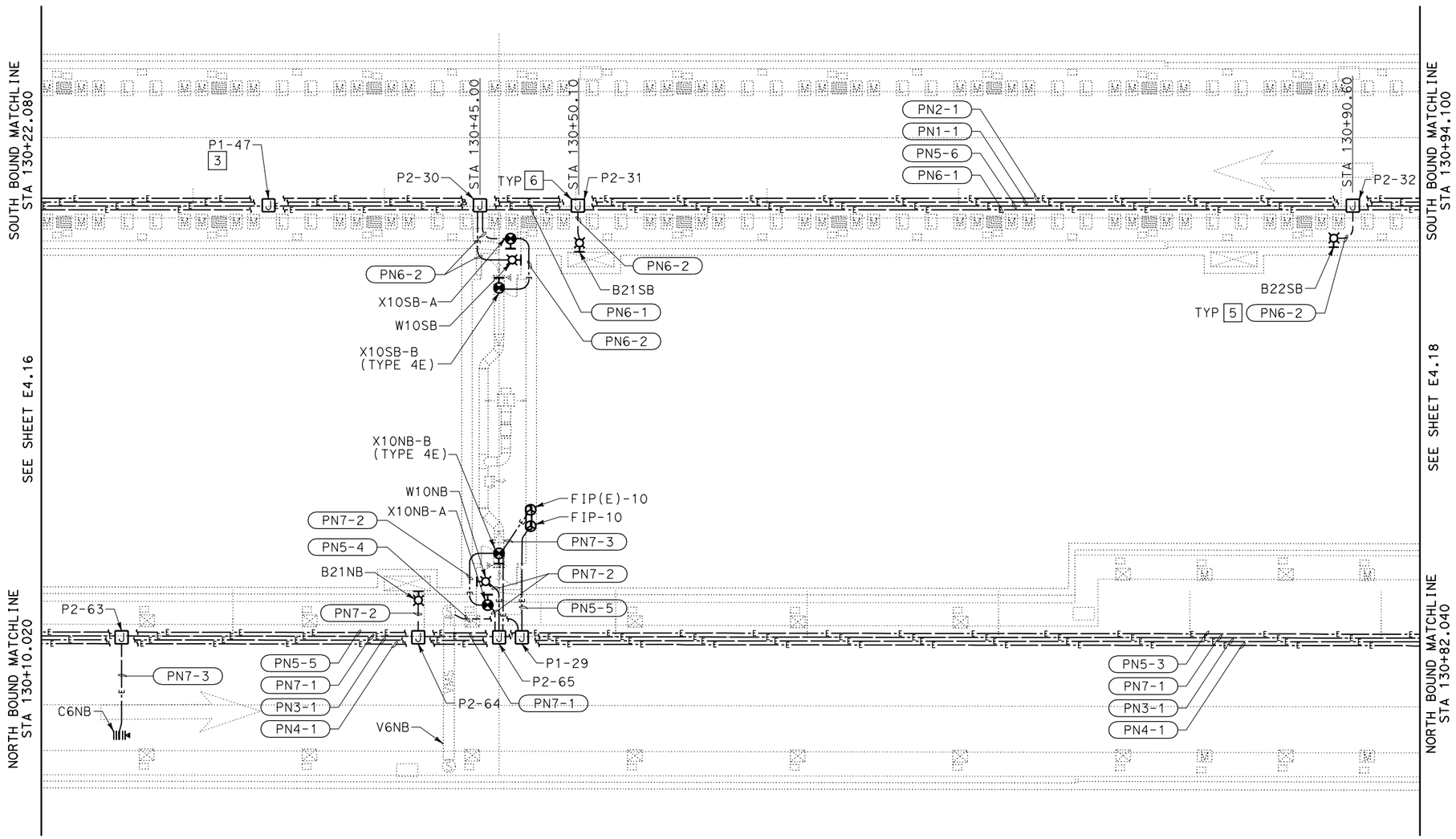

PLAN

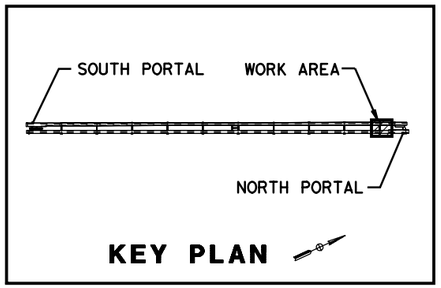

KEY PLAN

ALL DIMENSIONS ARE IN
MILLIMETERS UNLESS OTHERWISE SHOWN

TUNNEL POWER
PLAN NO. 17

SCALE 1:125

E4.17

PS&E SUBMITTAL (11/18/05)
NOT FOR CONSTRUCTION

CALCULATED/ DESIGNED BY	P. WHOBREY	DATE	REVISED BY
CHECKED BY	M. MAUNG	9/30/05	DATE REVISED
DESIGN OVERSIGHT	BEHZAD GOLEMOHAMMADI		

STATE OF CALIFORNIA - DEPARTMENT OF TRANSPORTATION
Caltrans
ELECTRICAL

LAST REVISION 00-00-00
DATE PLOTTED => 29-NOV-2005
TIME PLOTTED => 10:10

RELATIVE BORDER SCALE IS IN MILLIMETERS 0 20 40 60 80

USERNAME => LBragg
DGN FILE => 41123uza076.dgn

CU 04240

EA 1123U1

IDENTIFICATION STAMP
DIV. OF THE STATE ARCHITECT
SACRAMENTO REGIONAL OFFICE
02-107518
AC
DATE 11-15-05

Caltrans Metric

DIST	COUNTY	ROUTE	KILOMETER POST TOTAL PROJECT	SHEET No	TOTAL SHEETS
04	SM	1			

Min Maung 9/30/05
REGISTERED ELECTRICAL ENGINEER

PLANS APPROVAL DATE

REGISTERED PROFESSIONAL ENGINEER
MIN MAUNG
No. E012210
Exp. 09/30/06
ELECT
STATE OF CALIFORNIA

The State of California or its officers or agents shall not be responsible for the accuracy or completeness of electronic copies of this plan sheet.

HNTB *Corporation*
200 E. SANDPOINTE AVENUE, SUITE 200
SANTA ANA, CALIFORNIA 92707

Caltrans now has a web site! To get to the web site, go to: http://www.dot.ca.gov

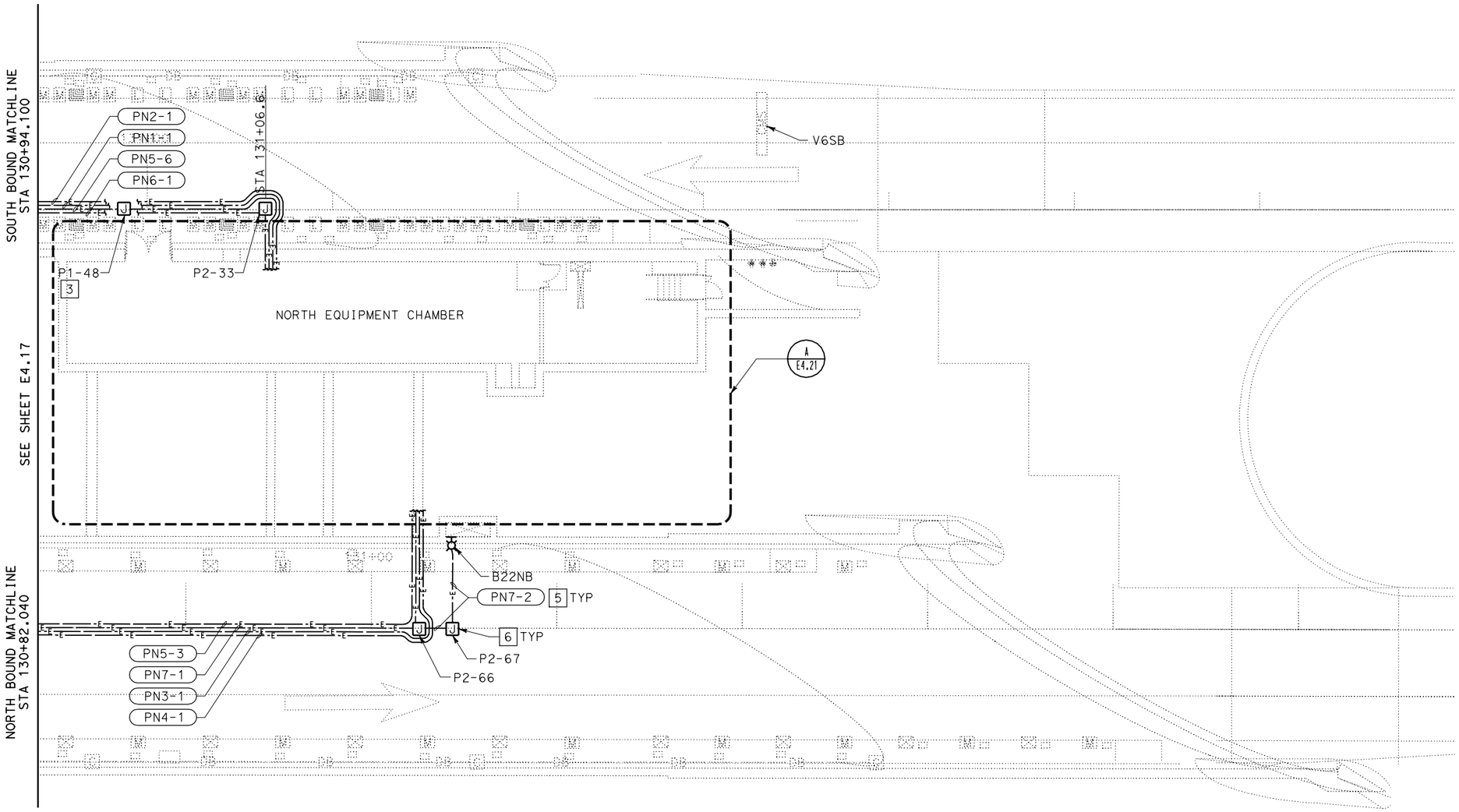

PLAN

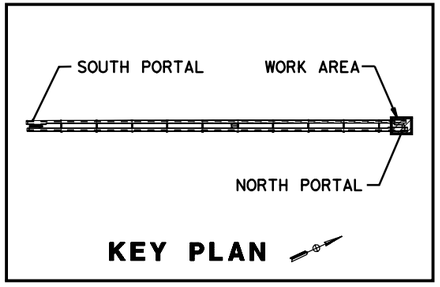

KEY PLAN

ALL DIMENSIONS ARE IN MILLIMETERS UNLESS OTHERWISE SHOWN

TUNNEL POWER PLAN NO. 18

SCALE 1:125

E4.18

PS&E SUBMITTAL (11/18/05)
NOT FOR CONSTRUCTION

STATE OF CALIFORNIA - DEPARTMENT OF TRANSPORTATION
Caltrans
ELECTRICAL

DESIGN OVERSIGHT: BEHZAD GOLEMOHAMMADI
CALCULATED/DESIGNED BY: P. WHOBREY
CHECKED BY: M. MAUNG
DATE: 9/30/05
REVISED BY
DATE REVISED

LAST REVISION 00-00-00
DATE PLOTTED => 29-NOV-2005
TIME PLOTTED => 10:09

RELATIVE BORDER SCALE IS IN MILLIMETERS 0 20 40 60 80
USERNAME => LBragg
DGN FILE => 41123uza077.dgn
CU 04240
EA 1123U1

DIST	COUNTY	ROUTE	KILOMETER POST TOTAL PROJECT	SHEET No	TOTAL SHEETS
04	SM	1			

Min Maung 9/30/05
REGISTERED ELECTRICAL ENGINEER

PLANS APPROVAL DATE

REGISTERED PROFESSIONAL ENGINEER MIN MAUNG No. E012210 Exp. 09/30/06 ELECT STATE OF CALIFORNIA

The State of California or its officers or agents shall not be responsible for the accuracy or completeness of electronic copies of this plan sheet.

HNTB *Corporation*
200 E. SANDPOINTE AVENUE, SUITE 200
SANTA ANA, CALIFORNIA 92707

Caltrans now has a web site! To get to the web site, go to: http://www.dot.ca.gov

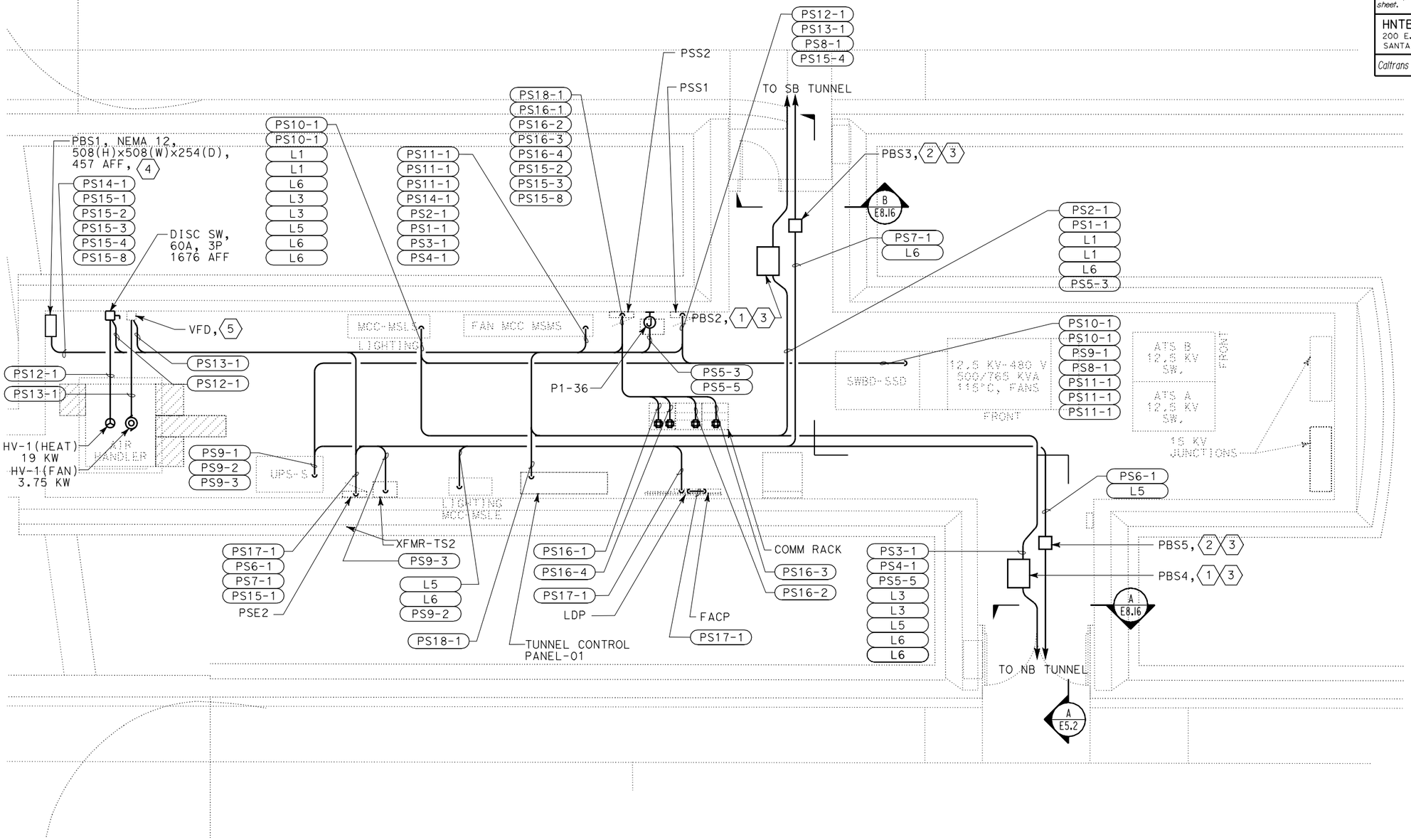

SHEET NOTES:

1. NEMA 12, PULL BOX. 610(L) x 508(W) x 254(D). HINGE DOOR FACING DOWN. PROVIDE (1) 35C SPARE RGS FROM PULL BOX TO TUNNEL.
2. NEMA 12, PULL BOX. 305(L) x 305(W) x 152(D). HINGE DOOR FACING DOWN. PROVIDE (1) 27C SPARE RGS FROM PULL BOX TO TUNNEL.
3. PROVIDE THE BACK PLATE WITH MOUNTING BUTTONS. SECURE CABLE TO BACK PLATE WITH CABLE TIES.
4. PROVIDE STEEL DIVIDER TO PULL BOX TO SEPARATE EMERGENCY POWER SOURCE, STAND-BY POWER SOURCE AND CONTROL WIRES.
5. VARIABLE FREQUENCY DRIVE (VFD) SUPPLIED UNDER MECHANICAL SPECIFICATIONS. POWER SUPPLY CONDUIT AND WIRES SUPPLIED UNDER ELECTRICAL SPECIFICATIONS.

(A) SOUTH EQUIPMENT CHAMBER POWER PLAN

PS&E SUBMITTAL (11/18/05)
NOT FOR CONSTRUCTION

ALL DIMENSIONS ARE IN MILLIMETERS UNLESS OTHERWISE SHOWN

SOUTH EQUIPMENT CHAMBER POWER PLAN

SCALE 1:125

E4.19

DATE	REVISED BY	DATE REVISED
9/30/05		

CALCULATED/DESIGNED BY: P. WHOBREY
CHECKED BY: M. MAUNG
DESIGN OVERSIGHT: BEHZAD GOLEMOHAMMADI

STATE OF CALIFORNIA - DEPARTMENT OF TRANSPORTATION
Caltrans
ELECTRICAL

LAST REVISION 00-00-00
DATE PLOTTED => 09-NOV-2005
TIME PLOTTED => 15:09

RELATIVE BORDER SCALE IS IN MILLIMETERS 0 20 40 60 80

USERNAME => lGraham
DGN FILE => 41123uza078.dgn

CU 04240

EA 1123U1

DIST	COUNTY	ROUTE	KILOMETER POST TOTAL PROJECT	SHEET No	TOTAL SHEETS
04	SM	1			

Min Maung 9/30/05
REGISTERED ELECTRICAL ENGINEER

PLANS APPROVAL DATE

REGISTERED PROFESSIONAL ENGINEER MIN MAUNG No. E012210 Exp. 09/30/06 ELECT STATE OF CALIFORNIA

The State of California or its officers or agents shall not be responsible for the accuracy or completeness of electronic copies of this plan sheet.

HNTB *Corporation*
200 E. SANDPOINTE AVENUE, SUITE 200
SANTA ANA, CALIFORNIA 92707

Caltrans now has a web site! To get to the web site, go to: http://www.dot.ca.gov

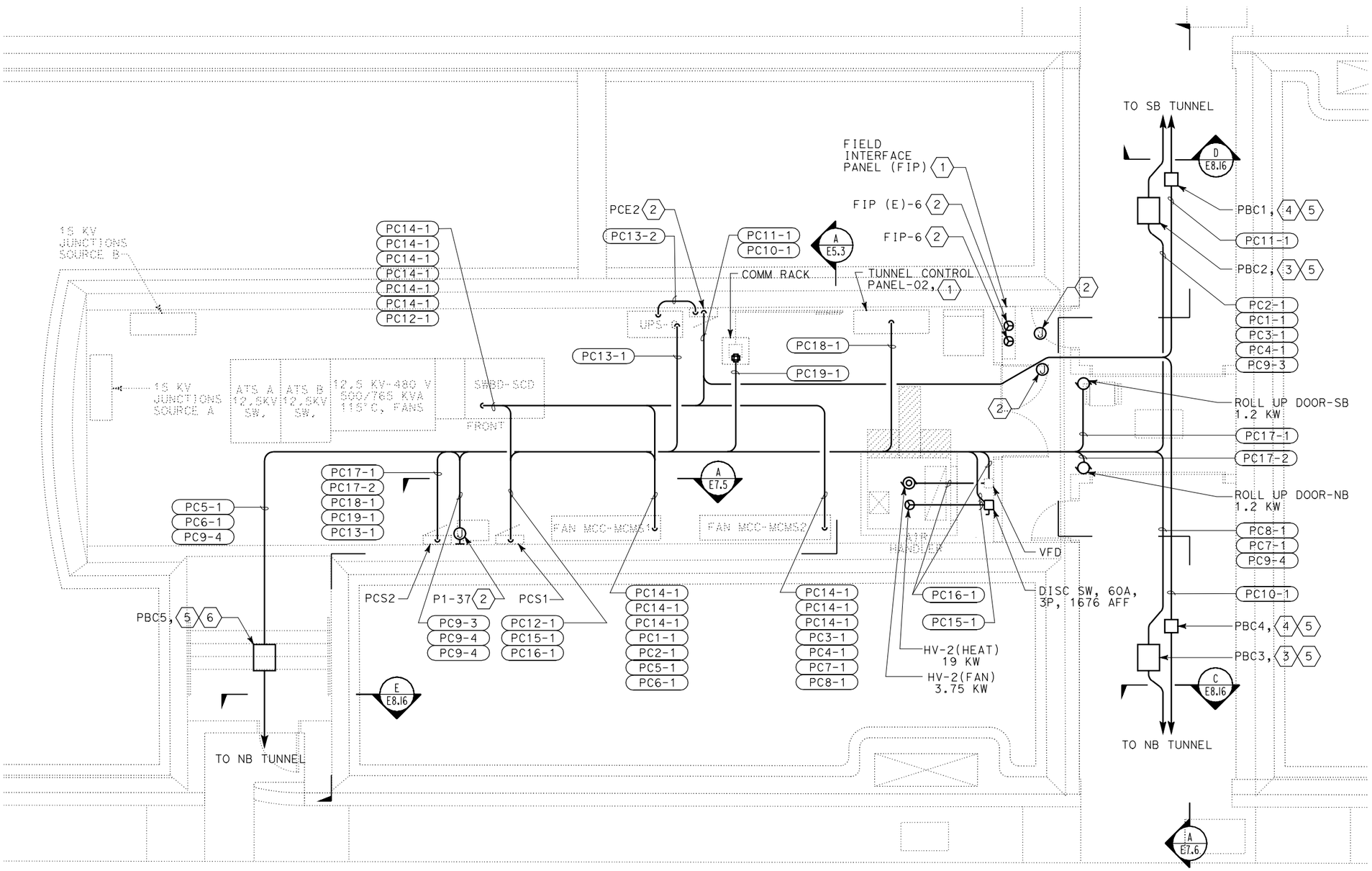

(A) CENTER EQUIPMENT CHAMBER POWER PLAN

SHEET NOTES:

1. TUNNEL CONTROL PANEL AND FIELD INTERFACE PANEL (FIP) SUPPLIED UNDER THE SYSTEMS SPECIFICATIONS. POWER SUPPLY, CONDUIT AND WIRES SUPPLIED UNDER THE ELECTRICAL SPECIFICATIONS.
2. FOR ELECTRICAL CIRCUIT AND CONNECTIONS, SEE SHEET E6.17.
3. NEMA 4X, PULL BOX. 610(L) x 508(W) x 254(D). HINGE DOOR FACING DOWN. PROVIDE (1) 35C SPARE RGS FROM PULL BOX TO TUNNEL.
4. NEMA 4X, PULL BOX. 305(L) x 305(W) x 152(D). HINGE DOOR FACING DOWN. PROVIDE (1) 27C SPARE RGS FROM PULL BOX TO TUNNEL.
5. PROVIDE THE BACK PLATE WITH MOUNTING BUTTONS. SECURE CABLE TO BACK PLATE WITH CABLE TIES.
6. NEMA 12, PULL BOX. 610(L) x 508(W) x 254(D). HINGE DOOR FACING DOWN. PROVIDE (1) 35C SPARE RGS FROM PULL BOX TO TUNNEL.

PS&E SUBMITTAL (11/18/05)
NOT FOR CONSTRUCTION

ALL DIMENSIONS ARE IN MILLIMETERS UNLESS OTHERWISE SHOWN

CENTER EQUIPMENT CHAMBER POWER PLAN

SCALE 1:50

E4.20

DATE	REVISED BY	DATE REVISED
9/30/05		

CALCULATED/DESIGNED BY: P. WHOBREY
CHECKED BY: M. MAUNG
DESIGN OVERSIGHT: BEHZAD GOLEMOHAMMADI

STATE OF CALIFORNIA - DEPARTMENT OF TRANSPORTATION
Caltrans
ELECTRICAL

LAST REVISION 00-00-00
DATE PLOTTED => 09-NOV-2005
TIME PLOTTED => 15:09

RELATIVE BORDER SCALE IS IN MILLIMETERS 0 20 40 60 80

USERNAME => lGraham
DGN FILE => 41123uza079.dgn

CU 04240
EA 1123U1

DIST	COUNTY	ROUTE	KILOMETER POST TOTAL PROJECT	SHEET No	TOTAL SHEETS
04	SM	1			

Min Maung 9/30/05
REGISTERED ELECTRICAL ENGINEER

PLANS APPROVAL DATE

REGISTERED PROFESSIONAL ENGINEER MIN MAUNG No. E012210 Exp. 09/30/06 ELECT STATE OF CALIFORNIA

The State of California or its officers or agents shall not be responsible for the accuracy or completeness of electronic copies of this plan sheet.

HNTB *Corporation*
200 E. SANDPOINTE AVENUE, SUITE 200
SANTA ANA, CALIFORNIA 92707

Caltrans now has a web site! To get to the web site, go to: http://www.dot.ca.gov

Caltrans Metric

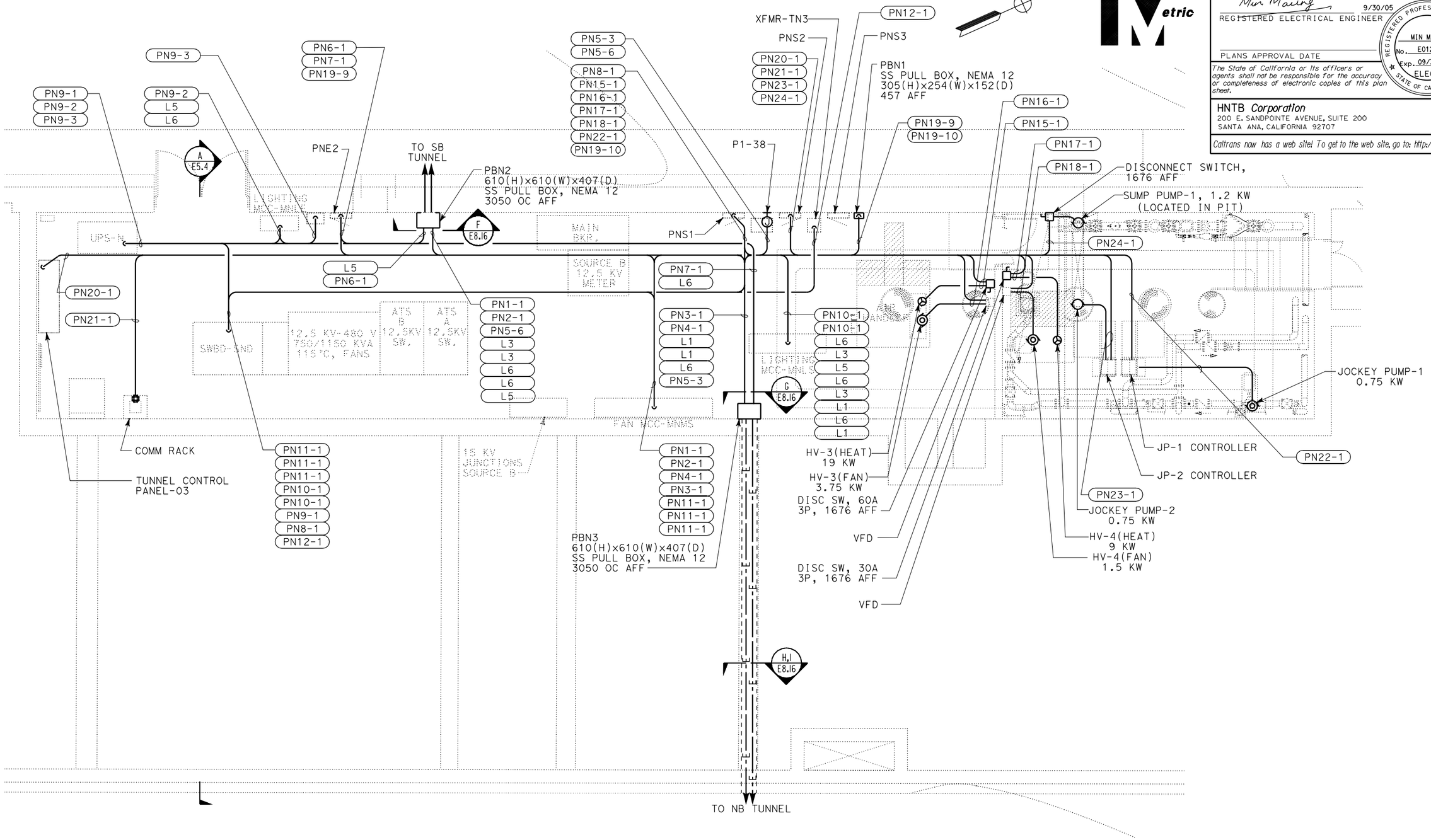

(A) NORTH EQUIPMENT CHAMBER POWER PLAN

PS&E SUBMITTAL (11/18/05)
NOT FOR CONSTRUCTION

ALL DIMENSIONS ARE IN MILLIMETERS UNLESS OTHERWISE SHOWN

NORTH EQUIPMENT CHAMBER POWER PLAN

SCALE 1:50

E4.21

STATE OF CALIFORNIA - DEPARTMENT OF TRANSPORTATION	DESIGN OVERSIGHT	CALCULATED/DESIGNED BY	REVISED BY
Caltrans	BEHZAD GOLEMOHAMMADI	P. WHOBREY	DATE
ELECTRICAL		M. MAUNG	DATE REVISED
		CHECKED BY	9/30/05

LAST REVISION 00-00-00 | DATE PLOTTED => 09-NOV-2005 | TIME PLOTTED => 15:09

RELATIVE BORDER SCALE IS IN MILLIMETERS 0 20 40 60 80

USERNAME => lGraham
DGN FILE => 41123uza080.dgn

CU 04240 | EA 1123U1

DIST	COUNTY	ROUTE	KILOMETER POST TOTAL PROJECT	SHEET No	TOTAL SHEETS
04	SM	1			

Min Maung 9/30/05
REGISTERED ELECTRICAL ENGINEER

REGISTERED PROFESSIONAL ENGINEER
MIN MAUNG
No. E012210
Exp. 09/30/06
ELECT
STATE OF CALIFORNIA

PLANS APPROVAL DATE

The State of California or its officers or agents shall not be responsible for the accuracy or completeness of electronic copies of this plan sheet.

HNTB *Corporation*
200 E. SANDPOINTE AVENUE, SUITE 200
SANTA ANA, CALIFORNIA 92707

Caltrans now has a web site! To get to the web site, go to: http://www.dot.ca.gov

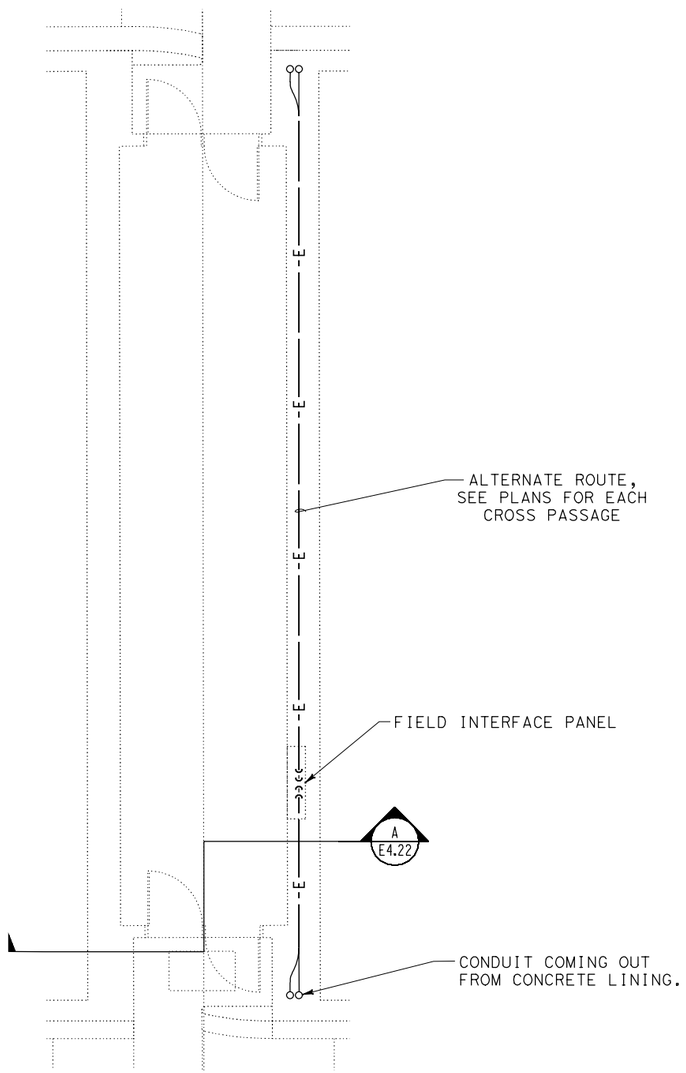

PLAN
1:50

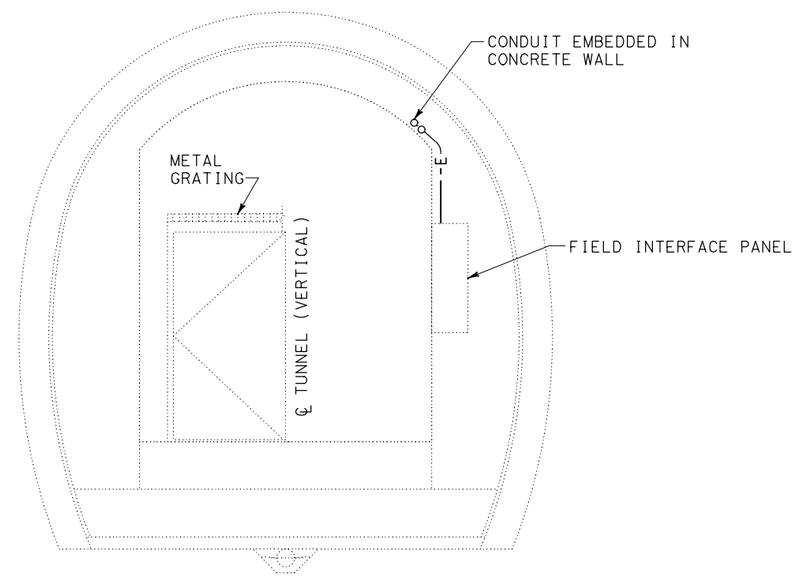

(A) SECTION
1:25

PS&E SUBMITTAL (11/18/05)
NOT FOR CONSTRUCTION

ALL DIMENSIONS ARE IN MILLIMETERS UNLESS OTHERWISE SHOWN

TYPICAL CROSS PASSAGE POWER PLAN

SCALE AS SHOWN

E4.22

STATE OF CALIFORNIA - DEPARTMENT OF TRANSPORTATION
Caltrans
ELECTRICAL

DESIGN OVERSIGHT: BEHZAD GOLEMOHAMMADI

CALCULATED/DESIGNED BY: P. WHOBREY
CHECKED BY: M. MAUNG

REVISED BY	DATE	DATE REVISED
	9/30/05	

LAST REVISION 00-00-00 | DATE PLOTTED => 09-NOV-2005 | TIME PLOTTED => 15:09

RELATIVE BORDER SCALE IS IN MILLIMETERS 0 20 40 60 80

USERNAME => lGraham
DGN FILE => 41123uza081.dgn

CU 04240

EA 1123U1

DIST	COUNTY	ROUTE	KILOMETER POST TOTAL PROJECT	SHEET No	TOTAL SHEETS
04	SM	1			

Caltrans Metric

Min Maung 9/30/05
REGISTERED ELECTRICAL ENGINEER

PLANS APPROVAL DATE

REGISTERED PROFESSIONAL ENGINEER MIN MAUNG No. E012210 Exp. 09/30/06 ELECT STATE OF CALIFORNIA

The State of California or its officers or agents shall not be responsible for the accuracy or completeness of electronic copies of this plan sheet.

HNTB *Corporation*
200 E. SANDPOINTE AVENUE, SUITE 200
SANTA ANA, CALIFORNIA 92707

Caltrans now has a web site! To get to the web site, go to: http://www.dot.ca.gov

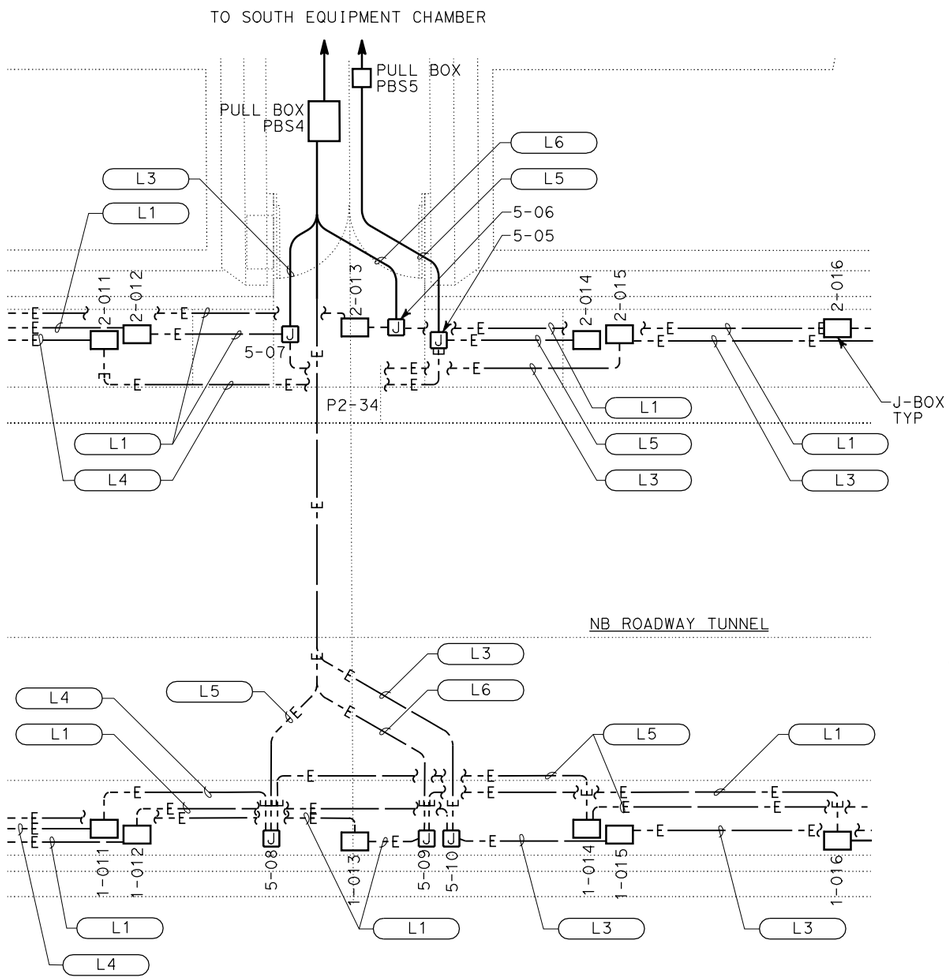

LIGHTING CONDUIT ROUTING PLAN TO SOUTH EQUIPMENT CHAMBER

(A) 1:50

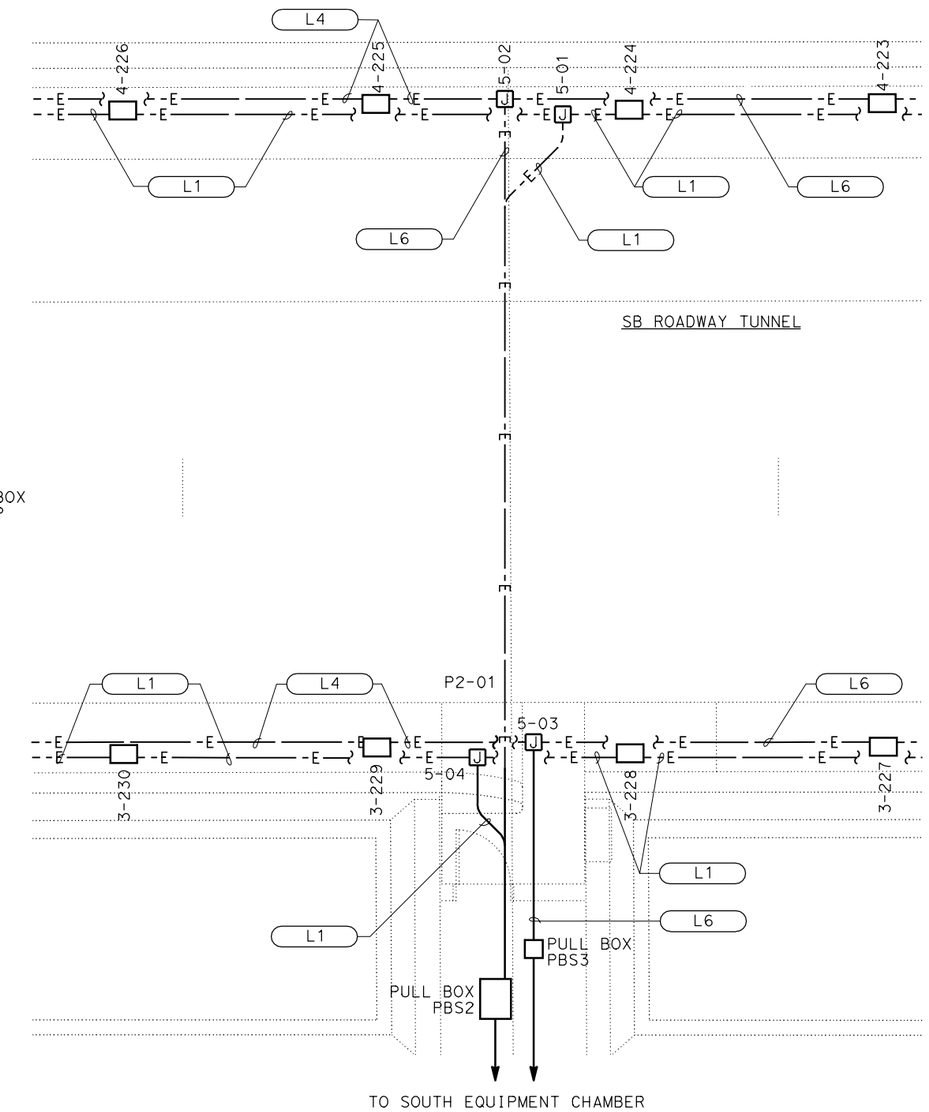

LIGHTING CONDUIT ROUTING PLAN TO SOUTH EQUIPMENT CHAMBER

(B) 1:50

ALL DIMENSIONS ARE IN MILLIMETERS UNLESS OTHERWISE SHOWN

ENLARGED POWER PLAN - SOUTH

SCALE AS SHOWN

E4.23

PS&E SUBMITTAL (11/18/05)
NOT FOR CONSTRUCTION

STATE OF CALIFORNIA - DEPARTMENT OF TRANSPORTATION
Caltrans
ELECTRICAL

DESIGN OVERSIGHT: BEHZAD GOLEMOHAMMADI
CALCULATED/DESIGNED BY: A. GOROVAYA
CHECKED BY: M. MAUNG
DATE: 9/30/05
REVISED BY
DATE REVISED

LAST REVISION 00-00-00
DATE PLOTTED => 09-NOV-2005
TIME PLOTTED => 15:09

RELATIVE BORDER SCALE IS IN MILLIMETERS 0 20 40 60 80

USERNAME => lGraham
DGN FILE => 41123uza082.dgn

CU 04240

EA 1123U1

DIST	COUNTY	ROUTE	KILOMETER POST TOTAL PROJECT	SHEET No	TOTAL SHEETS
04	SM	1			

Min Maung 9/30/05
REGISTERED ELECTRICAL ENGINEER

PLANS APPROVAL DATE

REGISTERED PROFESSIONAL ENGINEER MIN MAUNG No. E012210 Exp. 09/30/06 ELECT STATE OF CALIFORNIA

The State of California or its officers or agents shall not be responsible for the accuracy or completeness of electronic copies of this plan sheet.

HNTB *Corporation*
200 E. SANDPOINTE AVENUE, SUITE 200
SANTA ANA, CALIFORNIA 92707

Caltrans now has a web site! To get to the web site, go to: http://www.dot.ca.gov

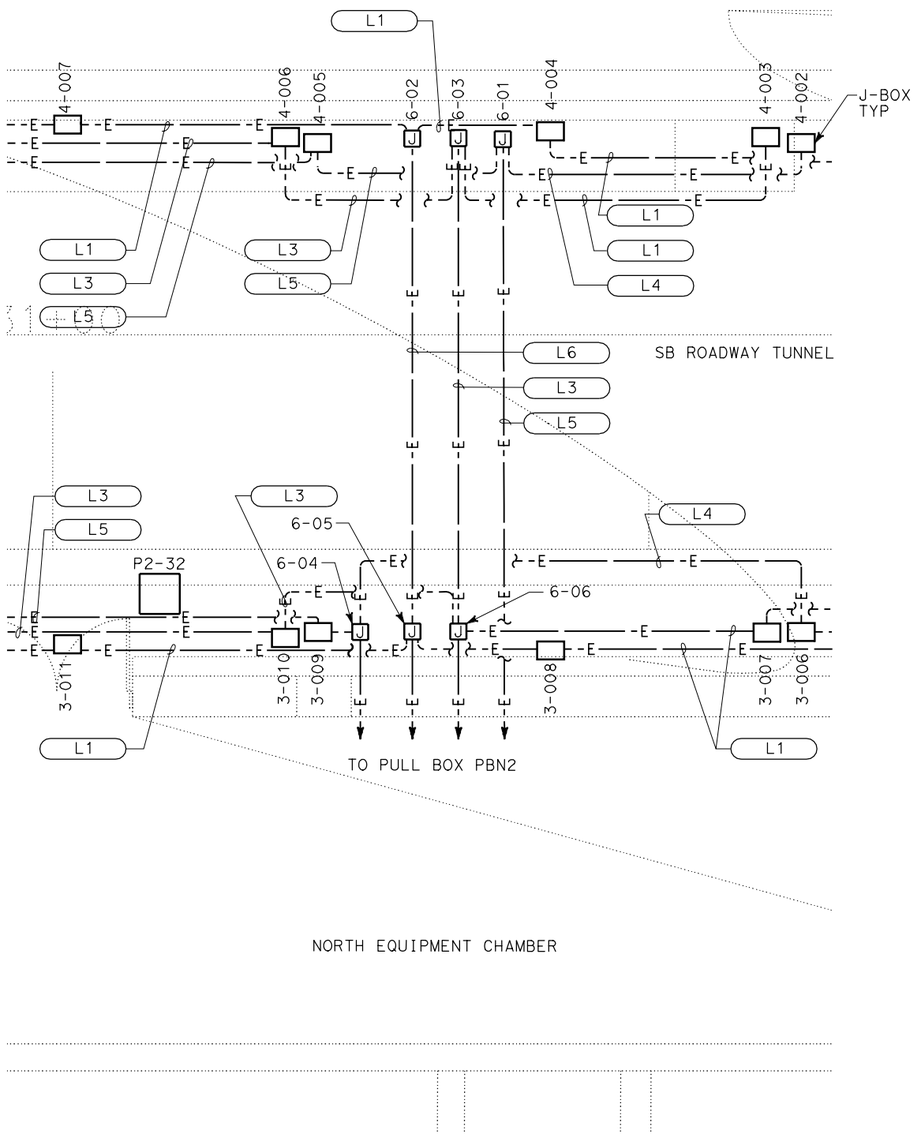

LIGHTING CONDUIT ROUTING PLAN TO NORTH EQUIPMENT CHAMBER

(A) 1:50

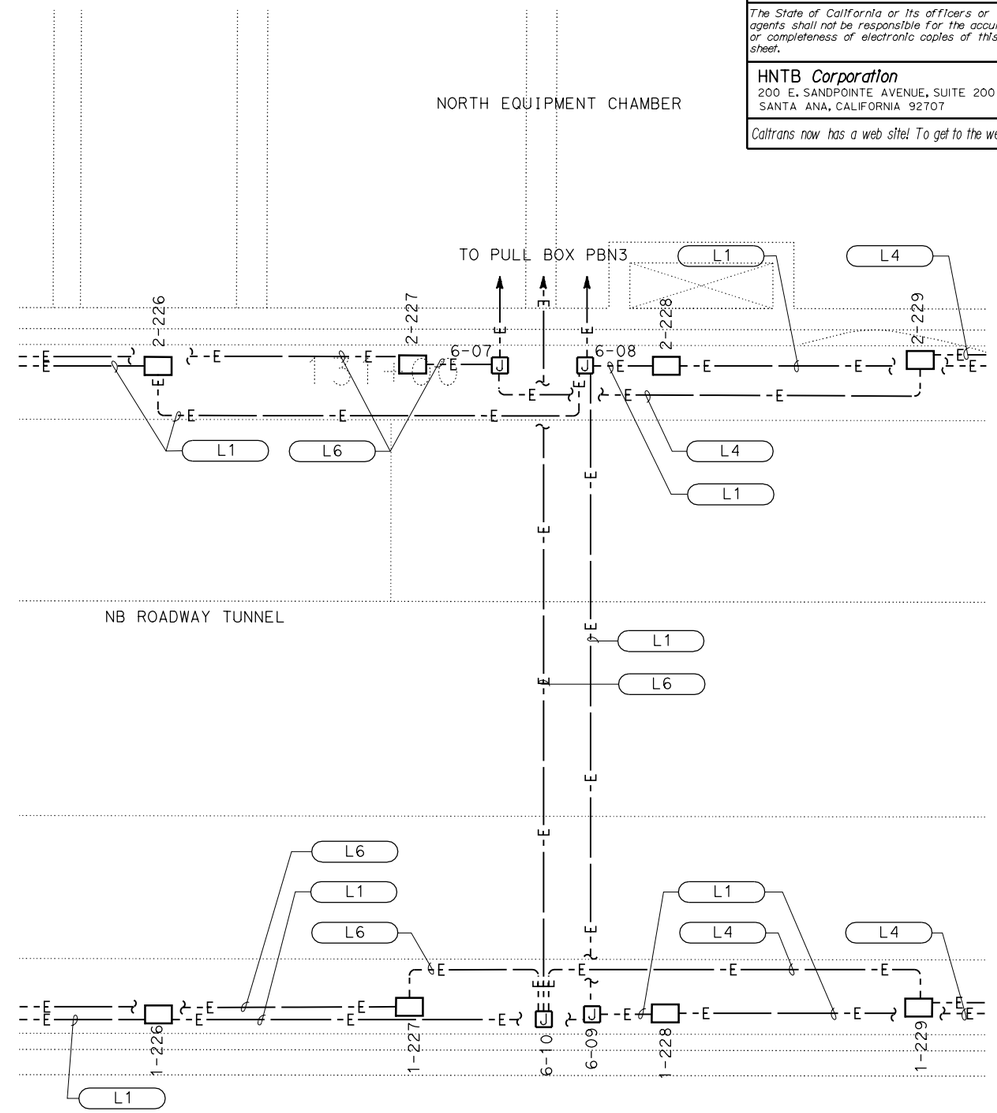

LIGHTING CONDUIT ROUTING PLAN TO NORTH EQUIPMENT CHAMBER

(B) 1:50

PS&E SUBMITTAL (11/18/05)
NOT FOR CONSTRUCTION

ALL DIMENSIONS ARE IN MILLIMETERS UNLESS OTHERWISE SHOWN

ENLARGED POWER PLAN - NORTH

SCALE AS SHOWN

E4.24

	DATE	REVISED BY	DATE REVISED
CALCULATED/DESIGNED BY	A. GOROVAYA		
CHECKED BY	M. MAUNG		
DESIGN OVERSIGHT	BEHZAD GOLEMOHAMMADI		

STATE OF CALIFORNIA - DEPARTMENT OF TRANSPORTATION
Caltrans
ELECTRICAL

RELATIVE BORDER SCALE IS IN MILLIMETERS 0 20 40 60 80

USERNAME => lGraham
DGN FILE => 41123uza083.dgn

CU 04240

EA 1123U1

LAST REVISION 00-00-00 | DATE PLOTTED => 09-NOV-2005 | TIME PLOTTED => 15:09

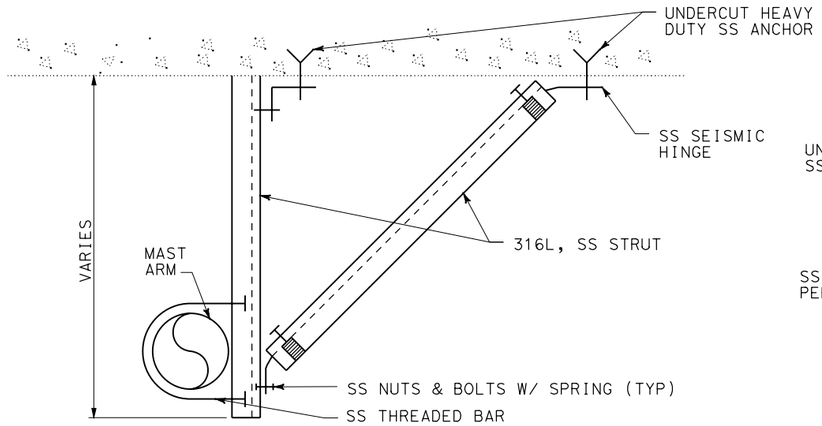

C FLASHING BEACON & SIGN SUPPORT DETAIL

NO SCALE

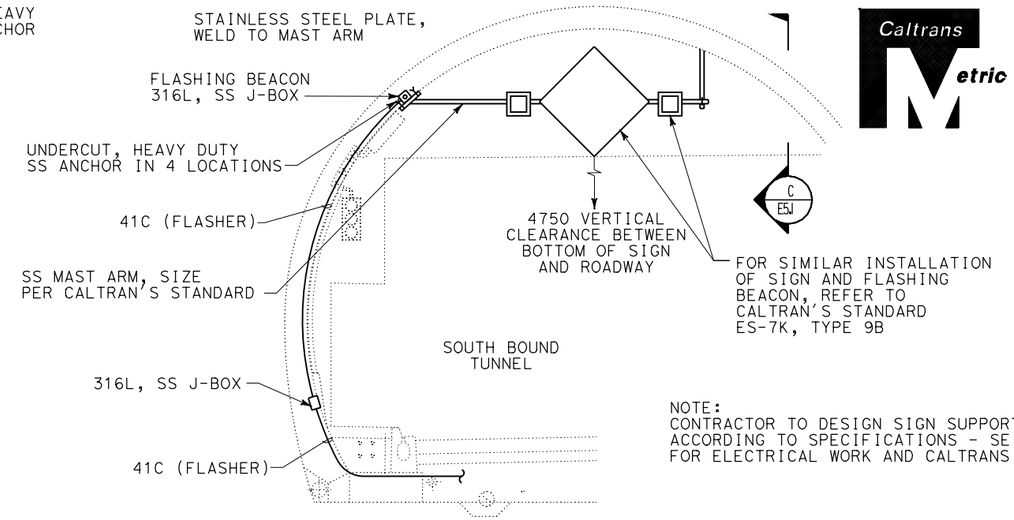

NOTE:
CONTRACTOR TO DESIGN SIGN SUPPORT SYSTEM ACCORDING TO SPECIFICATIONS - SEISMIC CONTROL FOR ELECTRICAL WORK AND CALTRANS STANDARD.

B FLASHING BEACON CONDUIT & SIGN SUPPORT SECTION

NO SCALE

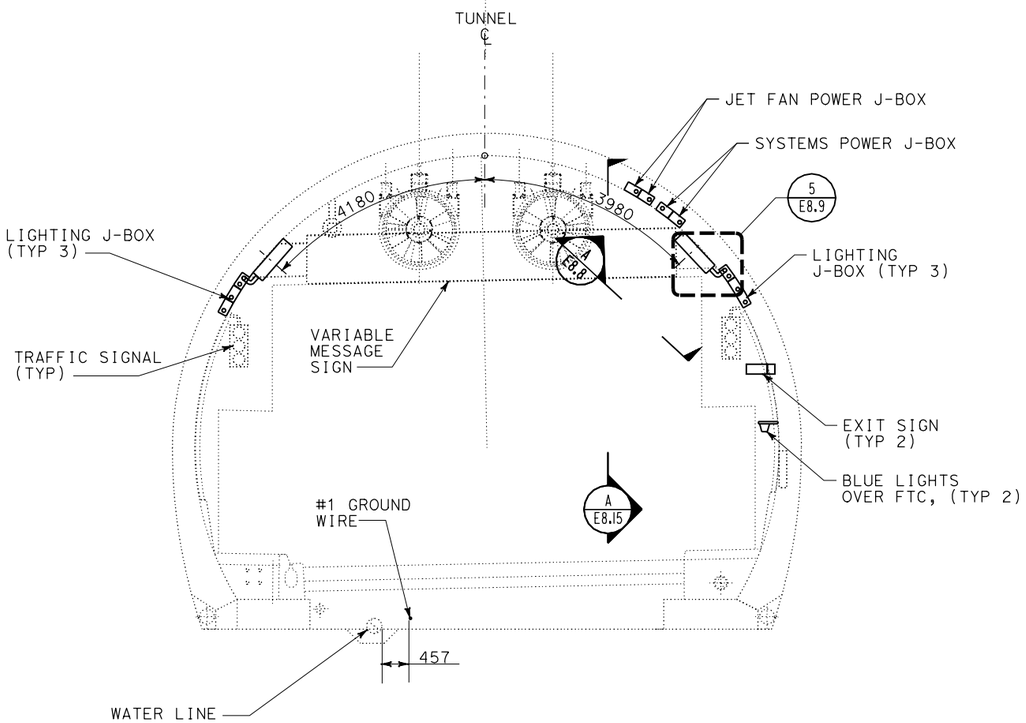

SOUTH BOUND TUNNEL LOOKING NORTH

NO SCALE

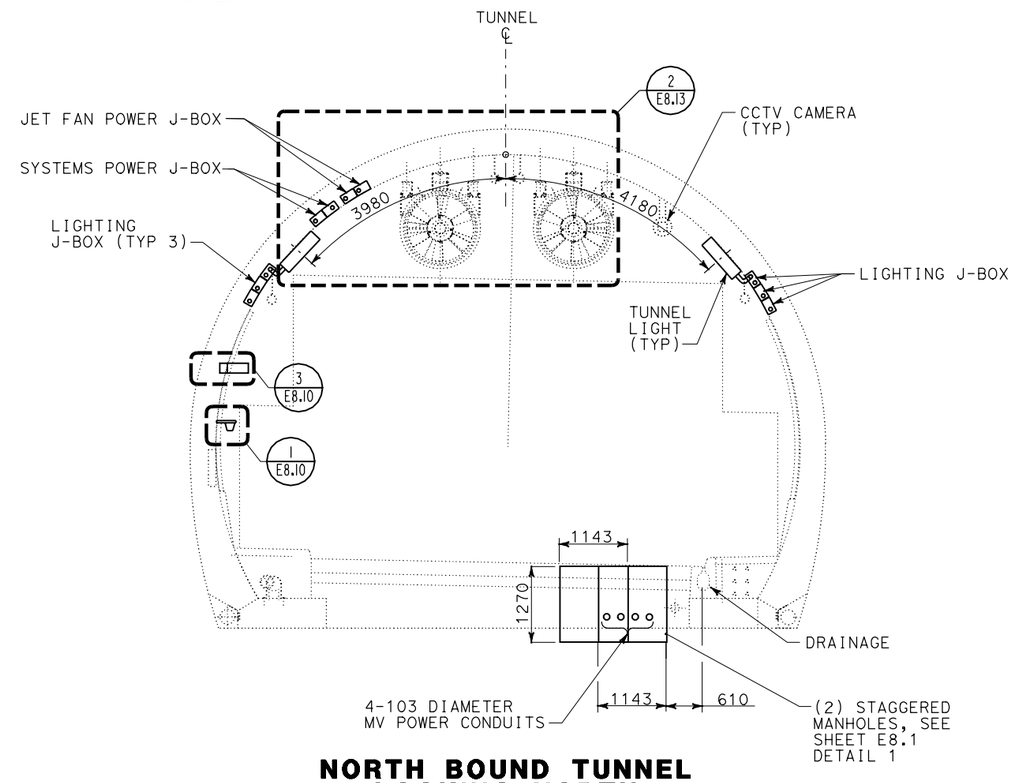

NORTH BOUND TUNNEL LOOKING NORTH

NO SCALE

A TYPICAL TUNNEL SECTION - LIGHTING & POWER

NO SCALE

PS&E SUBMITTAL (11/18/05)
NOT FOR CONSTRUCTION

ALL DIMENSIONS ARE IN MILLIMETERS UNLESS OTHERWISE SHOWN

TYPICAL TUNNEL SECTIONS

NO SCALE

E5.1

DIST	COUNTY	ROUTE	KILOMETER POST TOTAL PROJECT	SHEET No	TOTAL SHEETS
04	SM	1			

Min Maung 9/30/05
REGISTERED ELECTRICAL ENGINEER

PLANS APPROVAL DATE

REGISTERED PROFESSIONAL ENGINEER MIN MAUNG No. E012210 Exp. 09/30/06 ELECT STATE OF CALIFORNIA

The State of California or its officers or agents shall not be responsible for the accuracy or completeness of electronic copies of this plan sheet.

HNTB *Corporation*
200 E. SANDPOINTE AVENUE, SUITE 200
SANTA ANA, CALIFORNIA 92707

Caltrans now has a web site! To get to the web site, go to: http://www.dot.ca.gov

DATE	REVISED BY	DATE REVISED
9/30/05		

CALCULATED/DESIGNED BY: P. WHOBREY
CHECKED BY: M. MAUNG
DESIGN OVERSIGHT: BEHZAD GOLEMOHAMMADI

STATE OF CALIFORNIA - DEPARTMENT OF TRANSPORTATION
Caltrans
ELECTRICAL

RELATIVE BORDER SCALE IS IN MILLIMETERS 0 20 40 60 80

USERNAME => lGraham
DGN FILE => 41123uza084.dgn

CU 04240
EA 1123U1

LAST REVISION 00-00-00
DATE PLOTTED => 09-NOV-2005
TIME PLOTTED => 15:09

DIST	COUNTY	ROUTE	KILOMETER POST TOTAL PROJECT	SHEET No	TOTAL SHEETS
04	SM	1			

Min Maung 9/30/05
REGISTERED ELECTRICAL ENGINEER

PLANS APPROVAL DATE

REGISTERED PROFESSIONAL ENGINEER MIN MAUNG No. E012210 Exp. 09/30/06 ELECT STATE OF CALIFORNIA

The State of California or its officers or agents shall not be responsible for the accuracy or completeness of electronic copies of this plan sheet.

HNTB *Corporation*
200 E. SANDPOINTE AVENUE, SUITE 200
SANTA ANA, CALIFORNIA 92707

Caltrans now has a web site! To get to the web site, go to: http://www.dot.ca.gov

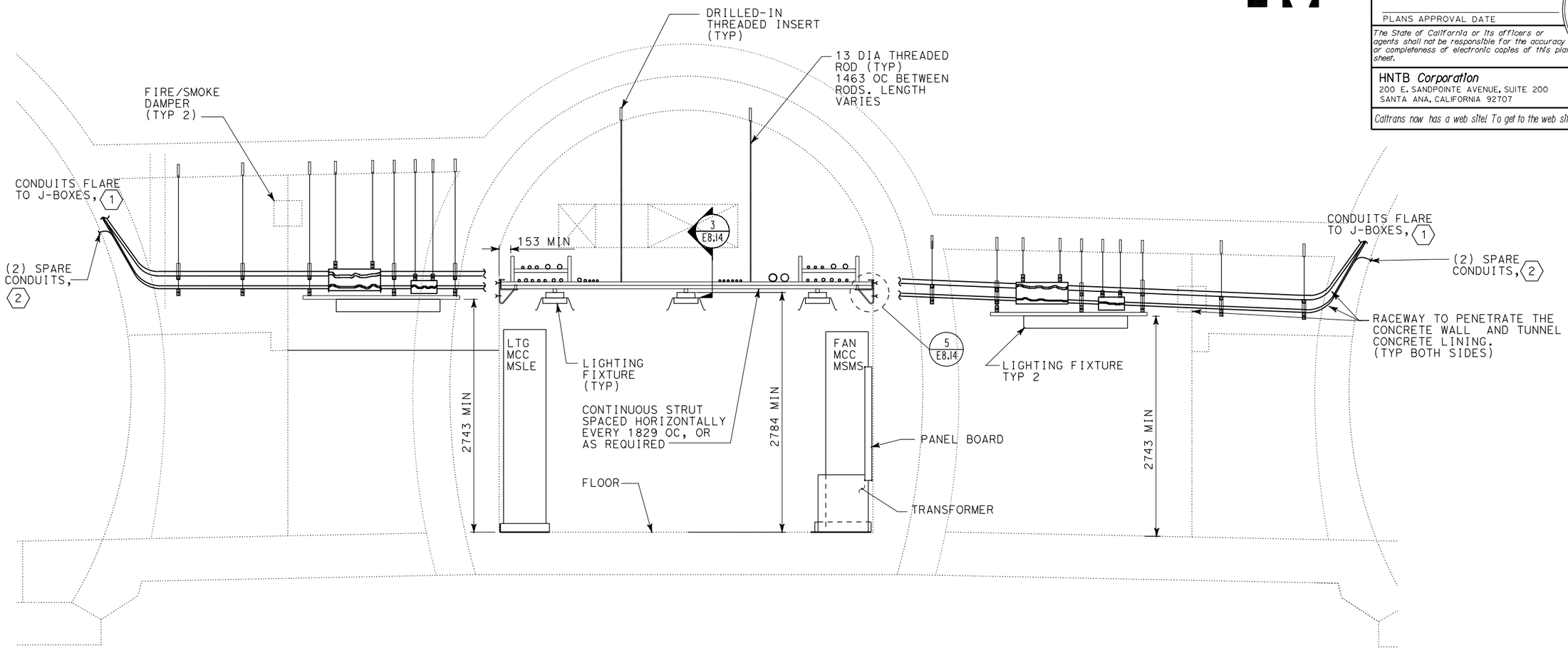

(A) SOUTH EQUIPMENT CHAMBER TYPICAL SECTION

SHEET NOTES:

1. FOR TYPICAL RACEWAY ARRANGEMENT IN THE TUNNEL, SEE SHEETS E8.8 AND E8.15.
2. SPARE CONDUITS STUB OUT 254 ABOVE JET FAN CONDUIT. USE FLUSHED COUPLER WITH END PLUG.

ALL DIMENSIONS ARE IN MILLIMETERS UNLESS OTHERWISE SHOWN

SOUTH EQUIPMENT CHAMBER TYPICAL SECTION

SCALE 1:25

E5.2

PS&E SUBMITTAL (11/18/05)
NOT FOR CONSTRUCTION

	DATE	REVISED BY	DATE REVISED
CALCULATED/DESIGNED BY	P. WHOBREY		
CHECKED BY	M. MAUNG	9/30/05	

DESIGN OVERSIGHT: BEHZAD GOLEMOHAMMADI

STATE OF CALIFORNIA - DEPARTMENT OF TRANSPORTATION
Caltrans
ELECTRICAL

LAST REVISION 00-00-00 | DATE PLOTTED => 09-NOV-2005 | TIME PLOTTED => 15:10

RELATIVE BORDER SCALE IS IN MILLIMETERS 0 20 40 60 80

USERNAME => lGraham
DGN FILE => 41123uza085.dgn

CU 04240 | EA 1123U1

DIST	COUNTY	ROUTE	KILOMETER POST TOTAL PROJECT	SHEET No	TOTAL SHEETS
04	SM	1			

Min Maung 9/30/05
REGISTERED ELECTRICAL ENGINEER

PLANS APPROVAL DATE

REGISTERED PROFESSIONAL ENGINEER MIN MAUNG No. E012210 Exp. 09/30/06 ELECT STATE OF CALIFORNIA

The State of California or its officers or agents shall not be responsible for the accuracy or completeness of electronic copies of this plan sheet.

HNTB *Corporation*
200 E. SANDPOINTE AVENUE, SUITE 200
SANTA ANA, CALIFORNIA 92707

Caltrans now has a web site! To get to the web site, go to: http://www.dot.ca.gov

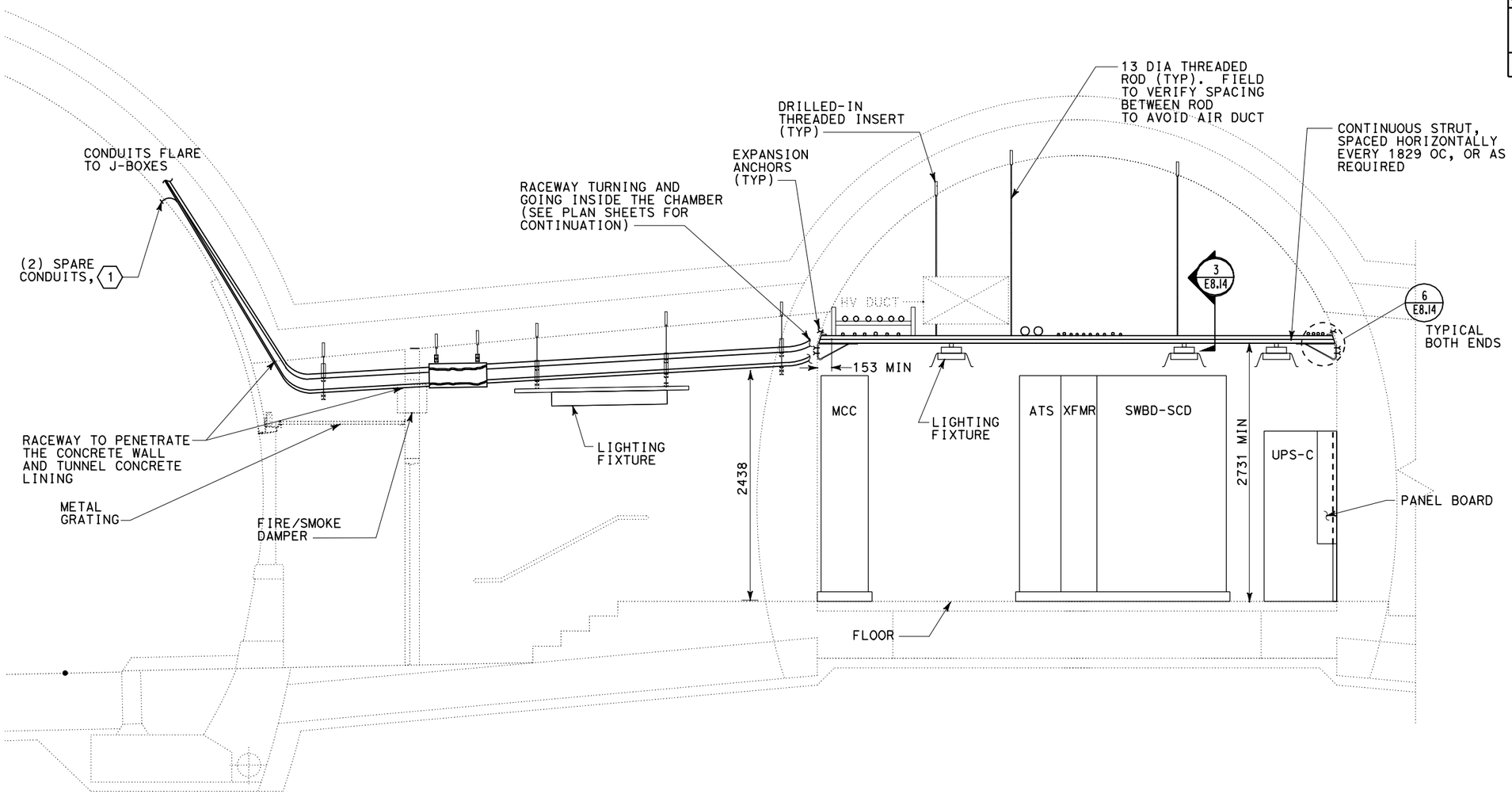

SHEET NOTES:

1. SPARE CONDUITS STUB OUT 254 ABOVE JET FAN CONDUIT. USE FLUSHED COUPLER WITH END PLUG.

(A) CENTER EQUIPMENT CHAMBER TYPICAL SECTION

PS&E SUBMITTAL (11/18/05)
NOT FOR CONSTRUCTION

ALL DIMENSIONS ARE IN MILLIMETERS UNLESS OTHERWISE SHOWN

CENTER EQUIPMENT CHAMBER TYPICAL SECTION

SCALE 1:25

E5.3

DATE	REVISED BY	DATE REVISED
9/30/05		

CALCULATED/DESIGNED BY: P. WHOBREY
CHECKED BY: M. MAUNG

DESIGN OVERSIGHT: BEHZAD GOLEMOHAMMADI

STATE OF CALIFORNIA - DEPARTMENT OF TRANSPORTATION
Caltrans
ELECTRICAL

LAST REVISION 00-00-00
DATE PLOTTED => 09-NOV-2005
TIME PLOTTED => 15:10

RELATIVE BORDER SCALE IS IN MILLIMETERS 0 20 40 60 80

USERNAME => lGraham
DGN FILE => 41123uza086.dgn

CU 04240

EA 1123U1

DIST	COUNTY	ROUTE	KILOMETER POST TOTAL PROJECT	SHEET No	TOTAL SHEETS
04	SM	1			

Min Maung 9/30/05
REGISTERED ELECTRICAL ENGINEER

PLANS APPROVAL DATE

REGISTERED PROFESSIONAL ENGINEER
MIN MAUNG
No. E012210
Exp. 09/30/06
ELECT
STATE OF CALIFORNIA

The State of California or its officers or agents shall not be responsible for the accuracy or completeness of electronic copies of this plan sheet.

HNTB *Corporation*
200 E. SANDPOINTE AVENUE, SUITE 200
SANTA ANA, CALIFORNIA 92707

Caltrans now has a web site! To get to the web site, go to: http://www.dot.ca.gov

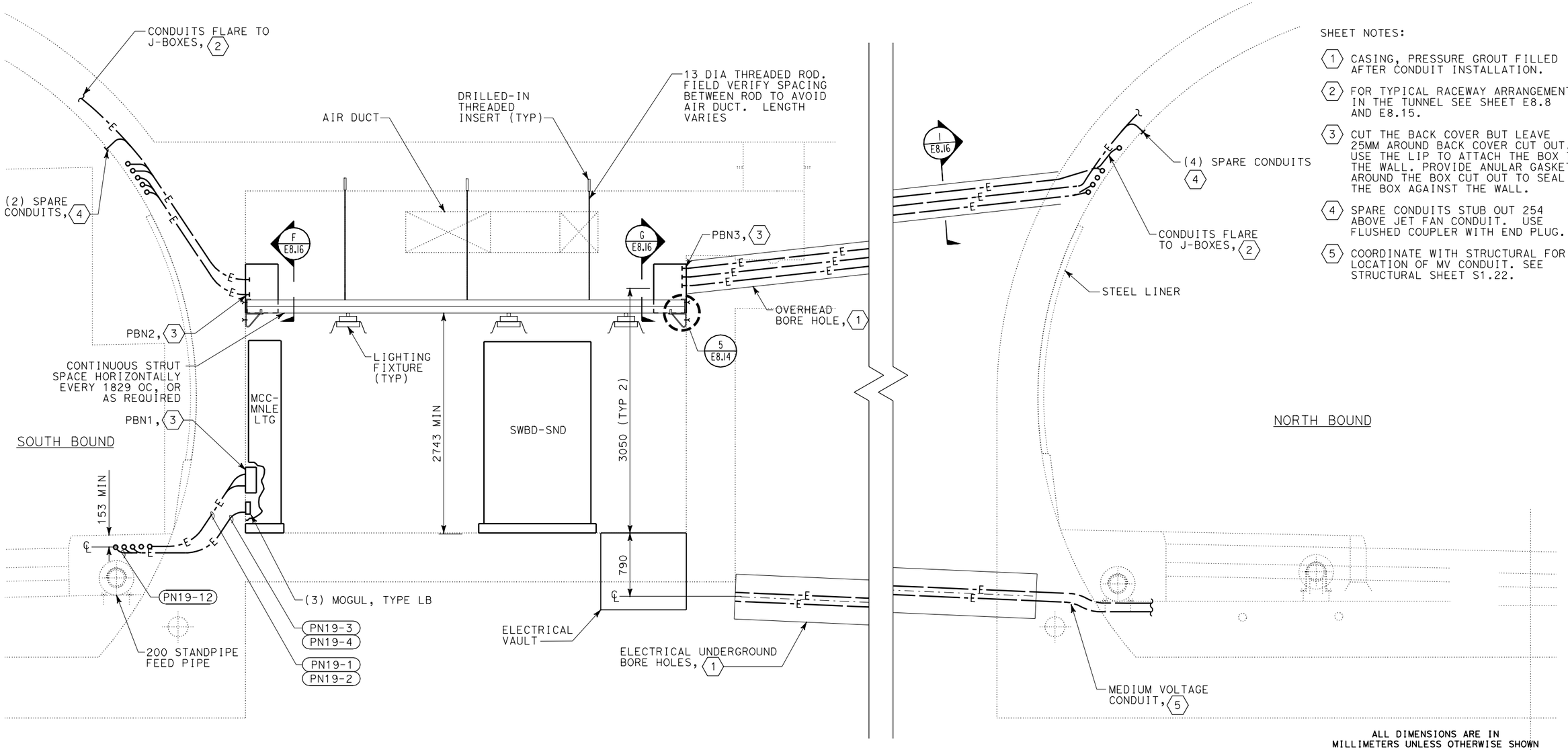

SHEET NOTES:

1. CASING, PRESSURE GROUT FILLED AFTER CONDUIT INSTALLATION.
2. FOR TYPICAL RACEWAY ARRANGEMENT IN THE TUNNEL SEE SHEET E8.8 AND E8.15.
3. CUT THE BACK COVER BUT LEAVE 25MM AROUND BACK COVER CUT OUT. USE THE LIP TO ATTACH THE BOX TO THE WALL. PROVIDE ANULAR GASKET AROUND THE BOX CUT OUT TO SEAL THE BOX AGAINST THE WALL.
4. SPARE CONDUITS STUB OUT 254 ABOVE JET FAN CONDUIT. USE FLUSHED COUPLER WITH END PLUG.
5. COORDINATE WITH STRUCTURAL FOR LOCATION OF MV CONDUIT. SEE STRUCTURAL SHEET S1.22.

(A) NORTH EQUIPMENT CHAMBER TYPICAL SECTION

PS&E SUBMITTAL (11/18/05)
NOT FOR CONSTRUCTION

ALL DIMENSIONS ARE IN MILLIMETERS UNLESS OTHERWISE SHOWN

NORTH EQUIPMENT CHAMBER TYPICAL SECTION

SCALE 1:25

E5.4

	DATE	REVISED BY	DATE REVISED
CALCULATED/DESIGNED BY	P. WHOBREY		
CHECKED BY	M. MAUNG		9/30/05

DESIGN OVERSIGHT
BEHZAD GOLEMOHAMMADI

STATE OF CALIFORNIA - DEPARTMENT OF TRANSPORTATION
Caltrans
ELECTRICAL

LAST REVISION 00-00-00
DATE PLOTTED => 09-NOV-2005
TIME PLOTTED => 15:10

RELATIVE BORDER SCALE IS IN MILLIMETERS 0 20 40 60 80

USERNAME => lGraham
DGN FILE => 41123uza087.dgn

CU 04240

EA 1123U1

DIST	COUNTY	ROUTE	KILOMETER POST TOTAL PROJECT	SHEET No	TOTAL SHEETS
04	SM	1			

Min Maung 9/30/05
REGISTERED ELECTRICAL ENGINEER

PLANS APPROVAL DATE

REGISTERED PROFESSIONAL ENGINEER MIN MAUNG No. E012210 Exp. 09/30/06 ELECT STATE OF CALIFORNIA

The State of California or its officers or agents shall not be responsible for the accuracy or completeness of electronic copies of this plan sheet.

HNTB *Corporation*
200 E. SANDPOINTE AVENUE, SUITE 200
SANTA ANA, CALIFORNIA 92707

Caltrans now has a web site! To get to the web site, go to: http://www.dot.ca.gov

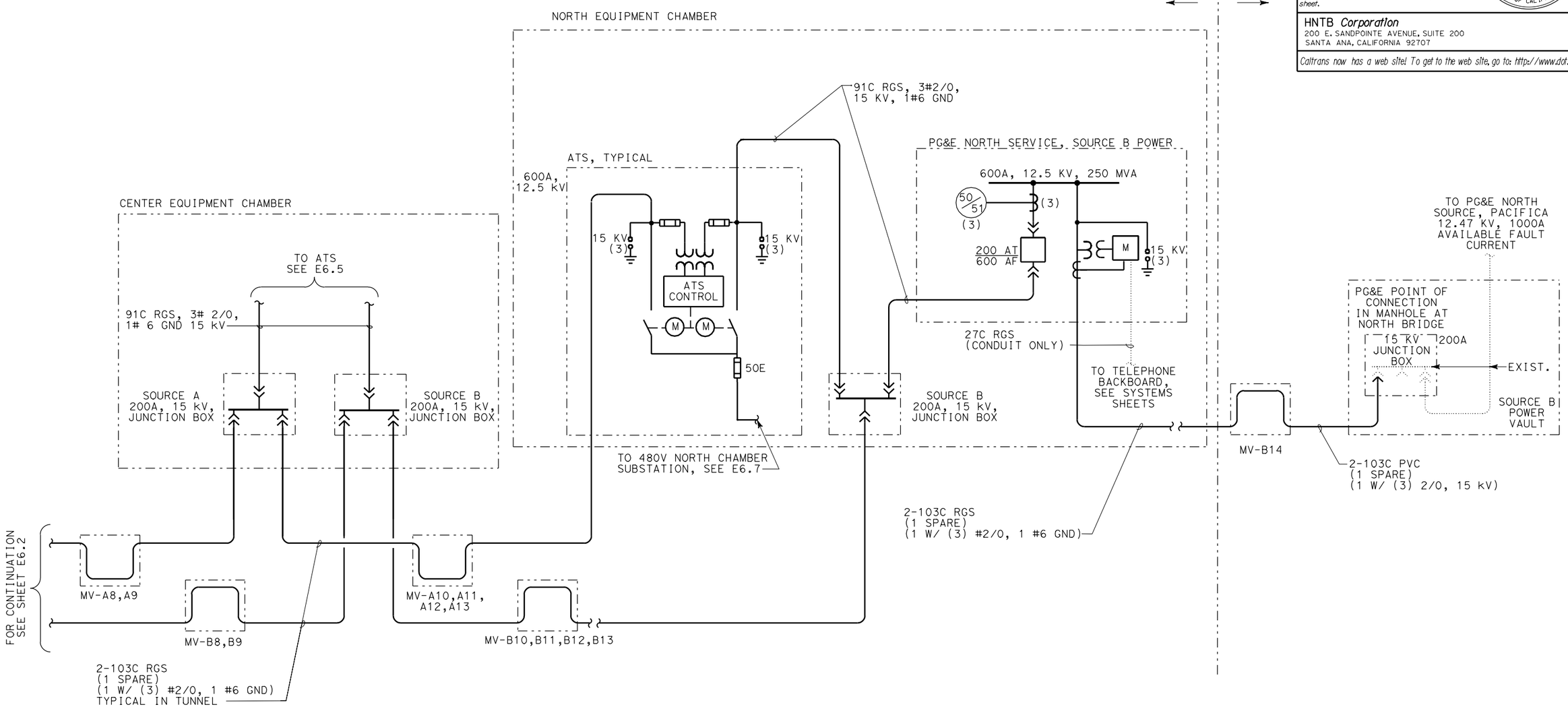

PS&E SUBMITTAL (11/18/05)
NOT FOR CONSTRUCTION

MEDIUM VOLTAGE ONE-LINE NO. 1

E6.1

STATE OF CALIFORNIA - DEPARTMENT OF TRANSPORTATION
Caltrans ELECTRICAL

DESIGN OVERSIGHT: BEHZAD GOLEMOHAMMADI
CALCULATED/DESIGNED BY: P. WHOBREY
CHECKED BY: M. MAUNG
DATE: 9/30/05
REVISED BY
DATE REVISED

LAST REVISION 00-00-00
DATE PLOTTED => 09-NOV-2005
TIME PLOTTED => 15:10

RELATIVE BORDER SCALE IS IN MILLIMETERS 0 20 40 60 80
USERNAME => lGraham
DGN FILE => 41123uza088.dgn
CU 04240
EA 1123U1

DIST	COUNTY	ROUTE	KILOMETER POST TOTAL PROJECT	SHEET No	TOTAL SHEETS
04	SM	1			

Min Maung 9/30/05
REGISTERED ELECTRICAL ENGINEER

PLANS APPROVAL DATE

REGISTERED PROFESSIONAL ENGINEER MIN MAUNG No. E012210 Exp. 09/30/06 ELECT STATE OF CALIFORNIA

The State of California or its officers or agents shall not be responsible for the accuracy or completeness of electronic copies of this plan sheet.

HNTB *Corporation*
200 E. SANDPOINTE AVENUE, SUITE 200
SANTA ANA, CALIFORNIA 92707

Caltrans now has a web site! To get to the web site, go to: http://www.dot.ca.gov

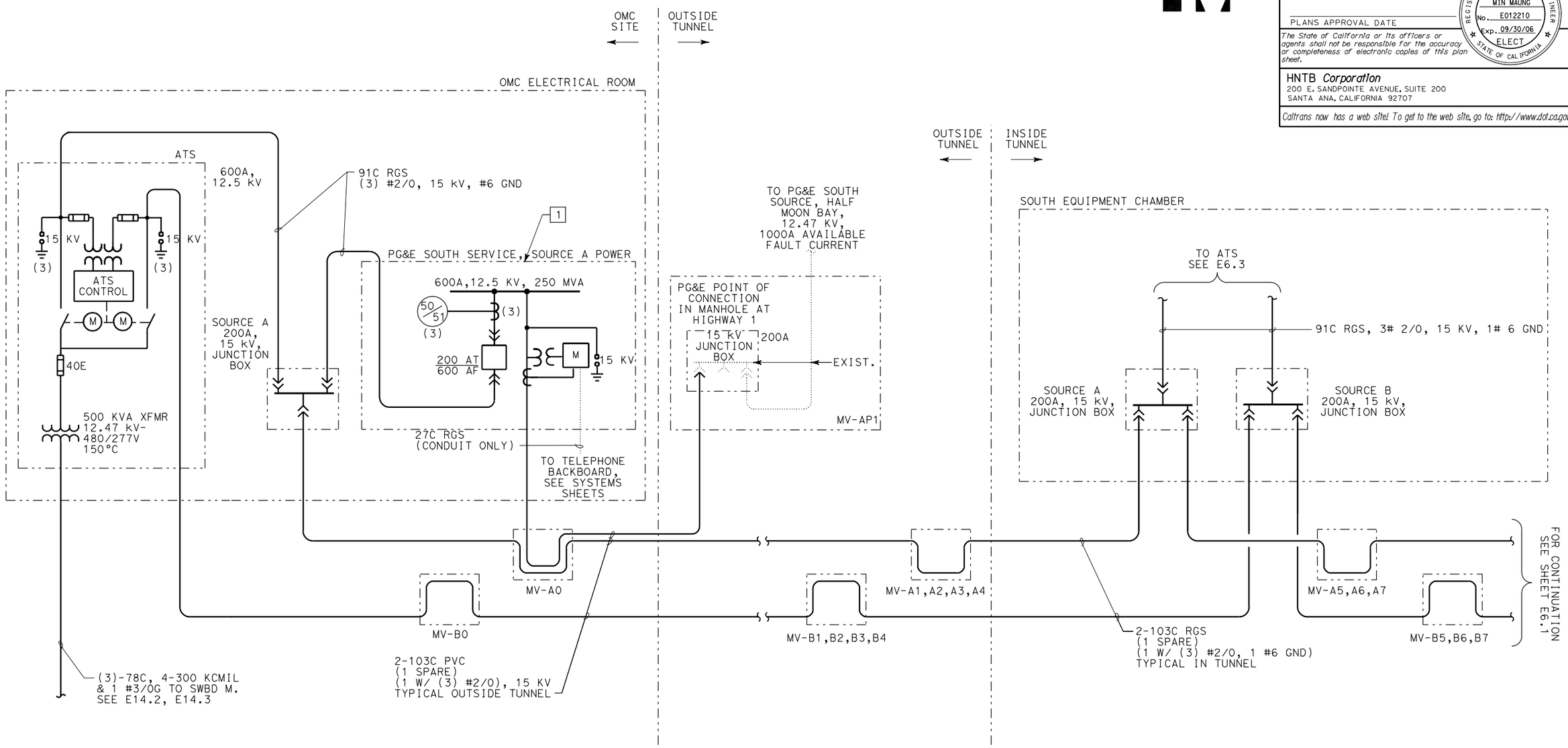

PS&E SUBMITTAL (11/18/05)
NOT FOR CONSTRUCTION

MEDIUM VOLTAGE ONE-LINE NO. 2

E6.2

DATE	REVISED BY	DATE REVISED
9/30/05	M. MAUNG	

CALCULATED/DESIGNED BY: P. WHOBREY
CHECKED BY: M. MAUNG

DESIGN OVERSIGHT: BEHZAD GOLEMOHAMMADI

STATE OF CALIFORNIA - DEPARTMENT OF TRANSPORTATION
Caltrans
ELECTRICAL

LAST REVISION 00-00-00
DATE PLOTTED => 09-NOV-2005
TIME PLOTTED => 15:10

RELATIVE BORDER SCALE IS IN MILLIMETERS 0 20 40 60 80

USERNAME => lGraham
DGN FILE => 41123uza089.dgn

CU 04240

EA 1123U1

DIST	COUNTY	ROUTE	KILOMETER POST TOTAL PROJECT	SHEET No	TOTAL SHEETS
04	SM	1			

Min Maung 9/30/05
REGISTERED ELECTRICAL ENGINEER

PLANS APPROVAL DATE

REGISTERED PROFESSIONAL ENGINEER MIN MAUNG No. E012210 Exp. 09/30/06 ELECT STATE OF CALIFORNIA

The State of California or its officers or agents shall not be responsible for the accuracy or completeness of electronic copies of this plan sheet.

HNTB *Corporation*
200 E. SANDPOINTE AVENUE, SUITE 200
SANTA ANA, CALIFORNIA 92707

Caltrans now has a web site! To get to the web site, go to: http://www.dot.ca.gov

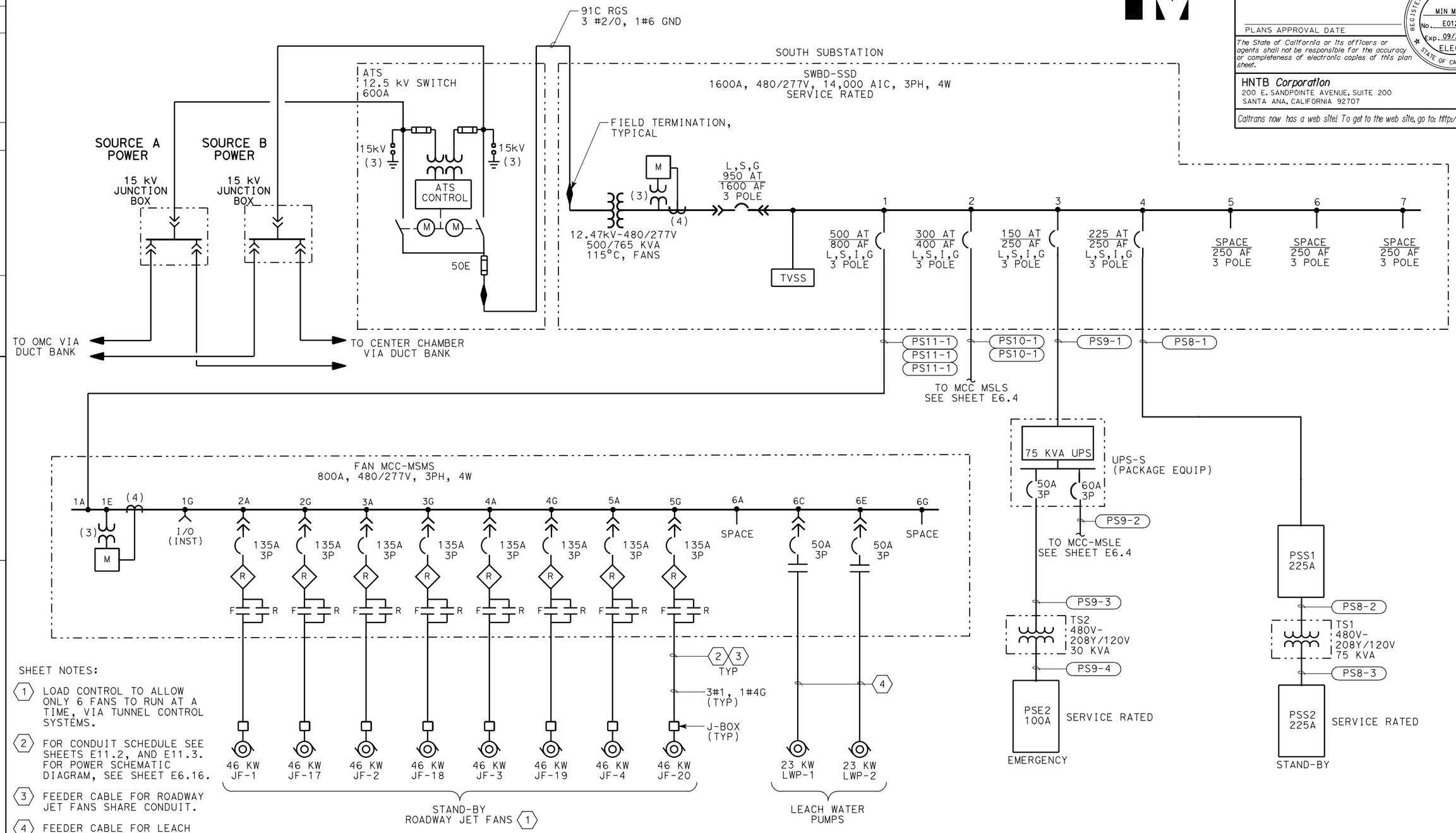

SHEET NOTES:

1. LOAD CONTROL TO ALLOW ONLY 6 FANS TO RUN AT A TIME, VIA TUNNEL CONTROL SYSTEMS.
2. FOR CONDUIT SCHEDULE SEE SHEETS E11.2, AND E11.3. FOR POWER SCHEMATIC DIAGRAM, SEE SHEET E6.16.
3. FEEDER CABLE FOR ROADWAY JET FANS SHARE CONDUIT.
4. FEEDER CABLE FOR LEACH WATER PUMPS SHARE CONDUIT. SEE PLAN SHEET E1.1.

PS&E SUBMITTAL (11/18/05)
NOT FOR CONSTRUCTION

SOUTH EQUIPMENT CHAMBER POWER ONE LINE NO. 1

E6.3

DATE	REVISED BY	DATE REVISED
9/30/05		

CALCULATED/DESIGNED BY: P. WHOBREY
CHECKED BY: M. MAUNG

DESIGN OVERSIGHT: BEHZAD GOLEMOHAMMADI

STATE OF CALIFORNIA - DEPARTMENT OF TRANSPORTATION
Caltrans
ELECTRICAL

LAST REVISION 00-00-00
DATE PLOTTED => 09-NOV-2005
TIME PLOTTED => 15:10

RELATIVE BORDER SCALE IS IN MILLIMETERS 0 20 40 60 80

USERNAME => lGraham
DGN FILE => 41123uza090.dgn

CU 04240

EA 1123U1

DIST	COUNTY	ROUTE	KILOMETER POST TOTAL PROJECT	SHEET No	TOTAL SHEETS
04	SM	1			

Min Maung 9/30/05
REGISTERED ELECTRICAL ENGINEER

PLANS APPROVAL DATE

REGISTERED PROFESSIONAL ENGINEER MIN MAUNG No. E012210 Exp. 09/30/06 ELECT STATE OF CALIFORNIA

The State of California or its officers or agents shall not be responsible for the accuracy or completeness of electronic copies of this plan sheet.

HNTB *Corporation*
200 E. SANDPOINTE AVENUE, SUITE 200
SANTA ANA, CALIFORNIA 92707

Caltrans now has a web site! To get to the web site, go to: http://www.dot.ca.gov

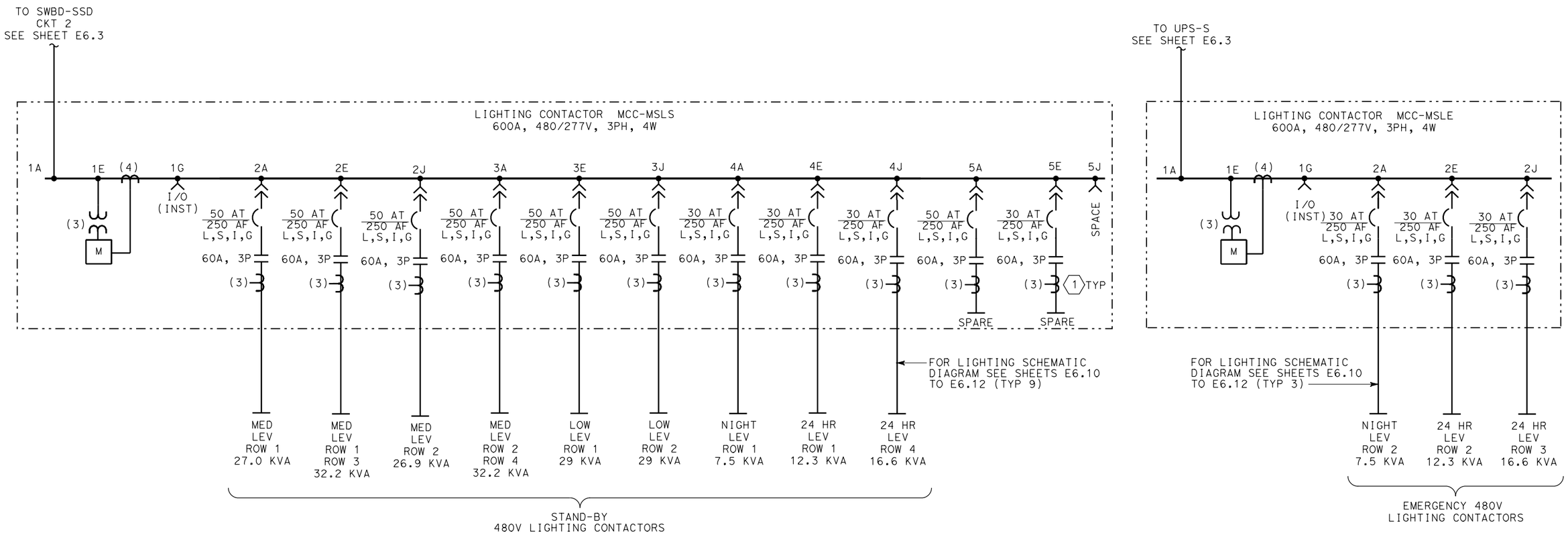

SHEET NOTES:

1. CT PROVIDED FOR INPUT TO TUNNEL CONTROL SYSTEMS TO DETERMINE BURNT OUT LAMPS FOR REPLACEMENT.

PS&E SUBMITTAL (11/18/05)
NOT FOR CONSTRUCTION

SOUTH EQUIPMENT CHAMBER POWER ONE LINE NO. 2

E6.4

	DATE	REVISED BY	DATE REVISED
	9/30/05		

CALCULATED/DESIGNED BY: P. WHOBREY
CHECKED BY: M. MAUNG
DESIGN OVERSIGHT: BEHZAD GOLEMOHAMMADI

STATE OF CALIFORNIA - DEPARTMENT OF TRANSPORTATION
Caltrans
ELECTRICAL

LAST REVISION 00-00-00
DATE PLOTTED => 09-NOV-2005
TIME PLOTTED => 15:10

RELATIVE BORDER SCALE IS IN MILLIMETERS 0 20 40 60 80
USERNAME => lGraham
DGN FILE => 41123uza091.dgn
CU 04240
EA 1123U1

DIST	COUNTY	ROUTE	KILOMETER POST TOTAL PROJECT	SHEET No	TOTAL SHEETS
04	SM	1			

Min Maung 9/30/05
REGISTERED ELECTRICAL ENGINEER

PLANS APPROVAL DATE

REGISTERED PROFESSIONAL ENGINEER MIN MAUNG No. E012210 Exp. 09/30/06 ELECT STATE OF CALIFORNIA

The State of California or its officers or agents shall not be responsible for the accuracy or completeness of electronic copies of this plan sheet.

HNTB *Corporation*
200 E. SANDPOINTE AVENUE, SUITE 200
SANTA ANA, CALIFORNIA 92707

Caltrans now has a web site! To get to the web site, go to: http://www.dot.ca.gov

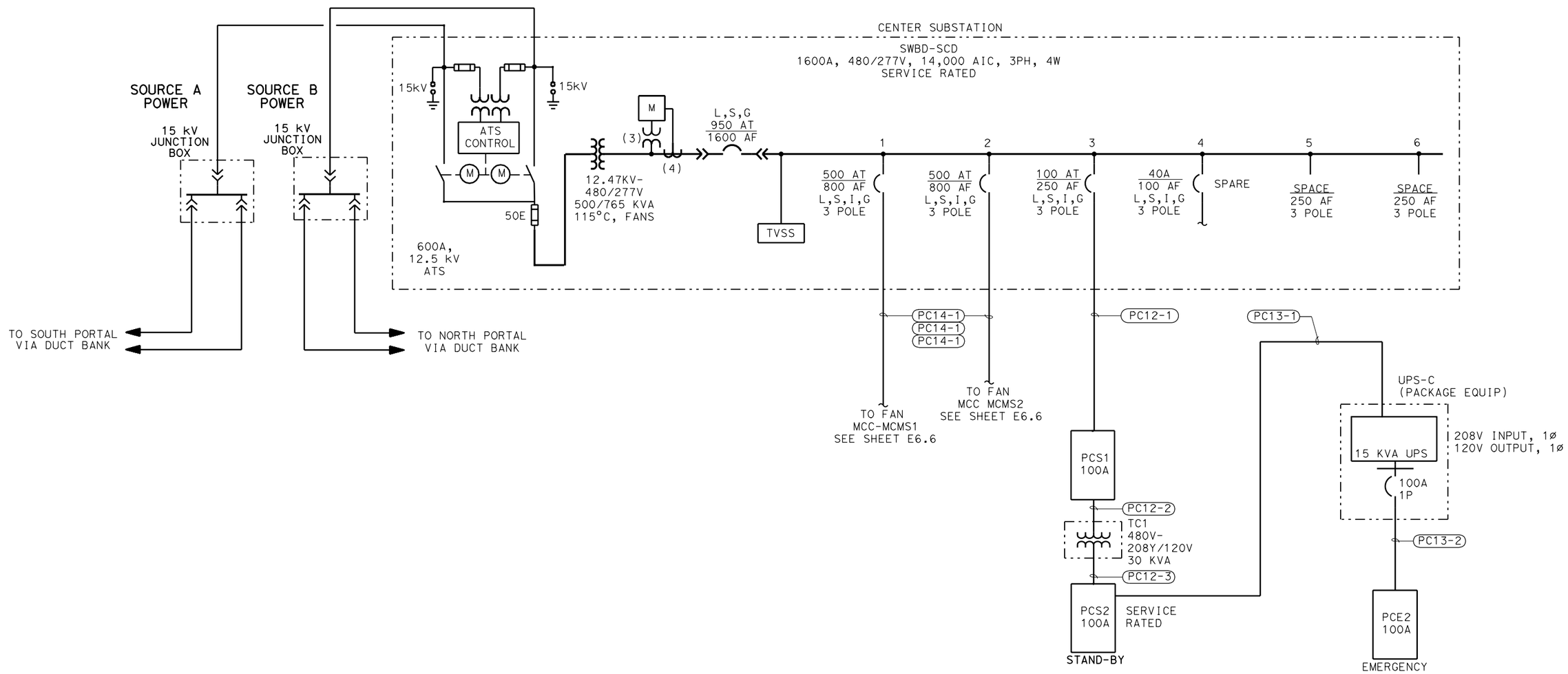

PS&E SUBMITTAL (11/18/05)
NOT FOR CONSTRUCTION

CENTER EQUIPMENT CHAMBER POWER ONE LINE NO. 1

E6.5

	DATE	REVISED BY	DATE REVISED
CALCULATED/DESIGNED BY	P. WHOBREY		
CHECKED BY	M. MAUNG		9/30/05

DESIGN OVERSIGHT
BEHZAD GOLEMOHAMMADI

STATE OF CALIFORNIA - DEPARTMENT OF TRANSPORTATION
Caltrans
ELECTRICAL

LAST REVISION 00-00-00
DATE PLOTTED => 09-NOV-2005
TIME PLOTTED => 15:10

RELATIVE BORDER SCALE IS IN MILLIMETERS 0 20 40 60 80

USERNAME => lGraham
DGN FILE => 41123uza092.dgn

CU 04240

EA 1123U1

DIST	COUNTY	ROUTE	KILOMETER POST TOTAL PROJECT	SHEET No	TOTAL SHEETS
04	SM	1			

Min Maung 9/30/05
REGISTERED ELECTRICAL ENGINEER

PLANS APPROVAL DATE

REGISTERED PROFESSIONAL ENGINEER
MIN MAUNG
No. E012210
Exp. 09/30/06
ELECT
STATE OF CALIFORNIA

The State of California or its officers or agents shall not be responsible for the accuracy or completeness of electronic copies of this plan sheet.

HNTB *Corporation*
200 E. SANDPOINTE AVENUE, SUITE 200
SANTA ANA, CALIFORNIA 92707

Caltrans now has a web site! To get to the web site, go to: http://www.dot.ca.gov

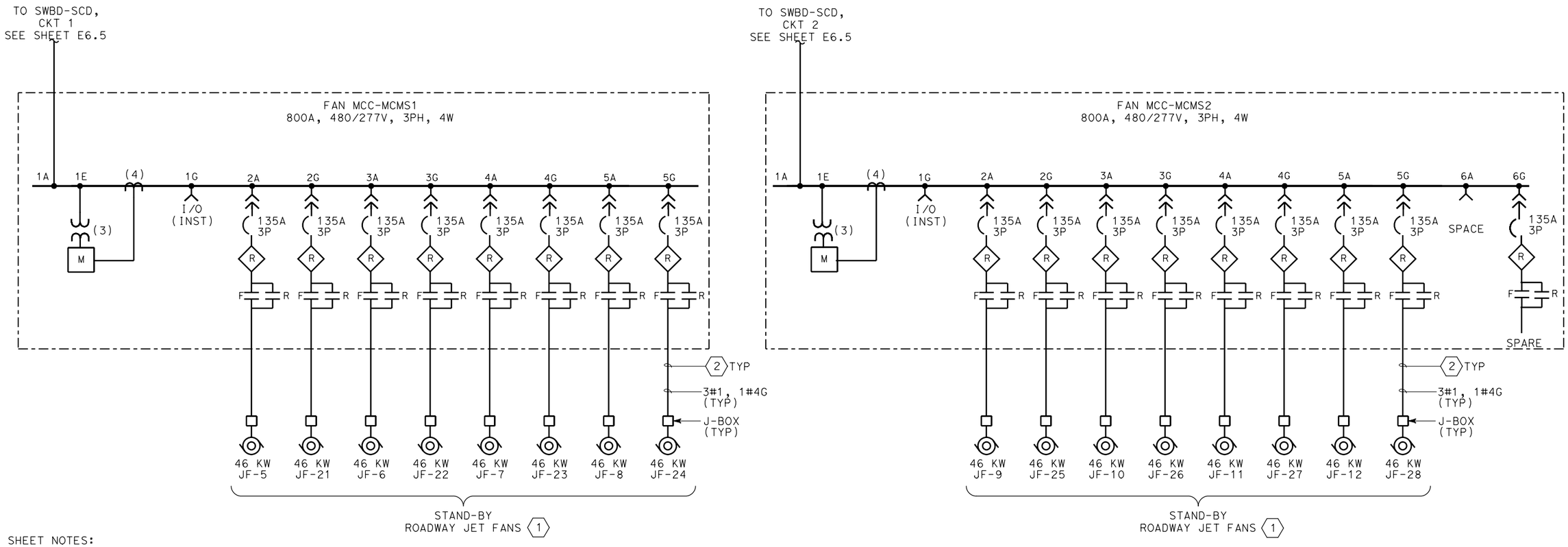

SHEET NOTES:

1. LOAD CONTROL TO ALLOW ONLY 6 FANS TO RUN AT A TIME, VIA TUNNEL CONTROL SYSTEMS.
2. SEE PLAN FOR ACTUAL FEEDER ROUTING.

PS&E SUBMITTAL (11/18/05)
NOT FOR CONSTRUCTION

CENTER EQUIPMENT CHAMBER POWER ONE LINE NO. 2

E6.6

DATE	REVISED BY
9/30/05	DATE REVISED
CALCULATED/ DESIGNED BY	P. WHOBREY
CHECKED BY	M. MAUNG
DESIGN OVERSIGHT	BEHZAD GOLEMOHAMMADI

STATE OF CALIFORNIA - DEPARTMENT OF TRANSPORTATION
Caltrans
ELECTRICAL

LAST REVISION 00-00-00
DATE PLOTTED => 09-NOV-2005
TIME PLOTTED => 15:10

RELATIVE BORDER SCALE IS IN MILLIMETERS 0 20 40 60 80
USERNAME => lGraham
DGN FILE => 41123uza093.dgn
CU 04240
EA 1123U1

DIST	COUNTY	ROUTE	KILOMETER POST TOTAL PROJECT	SHEET No	TOTAL SHEETS
04	SM	1			

Min Maung 9/30/05
REGISTERED ELECTRICAL ENGINEER

PLANS APPROVAL DATE

REGISTERED PROFESSIONAL ENGINEER MIN MAUNG No. E012210 Exp. 09/30/06 ELECT STATE OF CALIFORNIA

The State of California or its officers or agents shall not be responsible for the accuracy or completeness of electronic copies of this plan sheet.

HNTB *Corporation*
200 E. SANDPOINTE AVENUE, SUITE 200
SANTA ANA, CALIFORNIA 92707

Caltrans now has a web site! To get to the web site, go to: http://www.dot.ca.gov

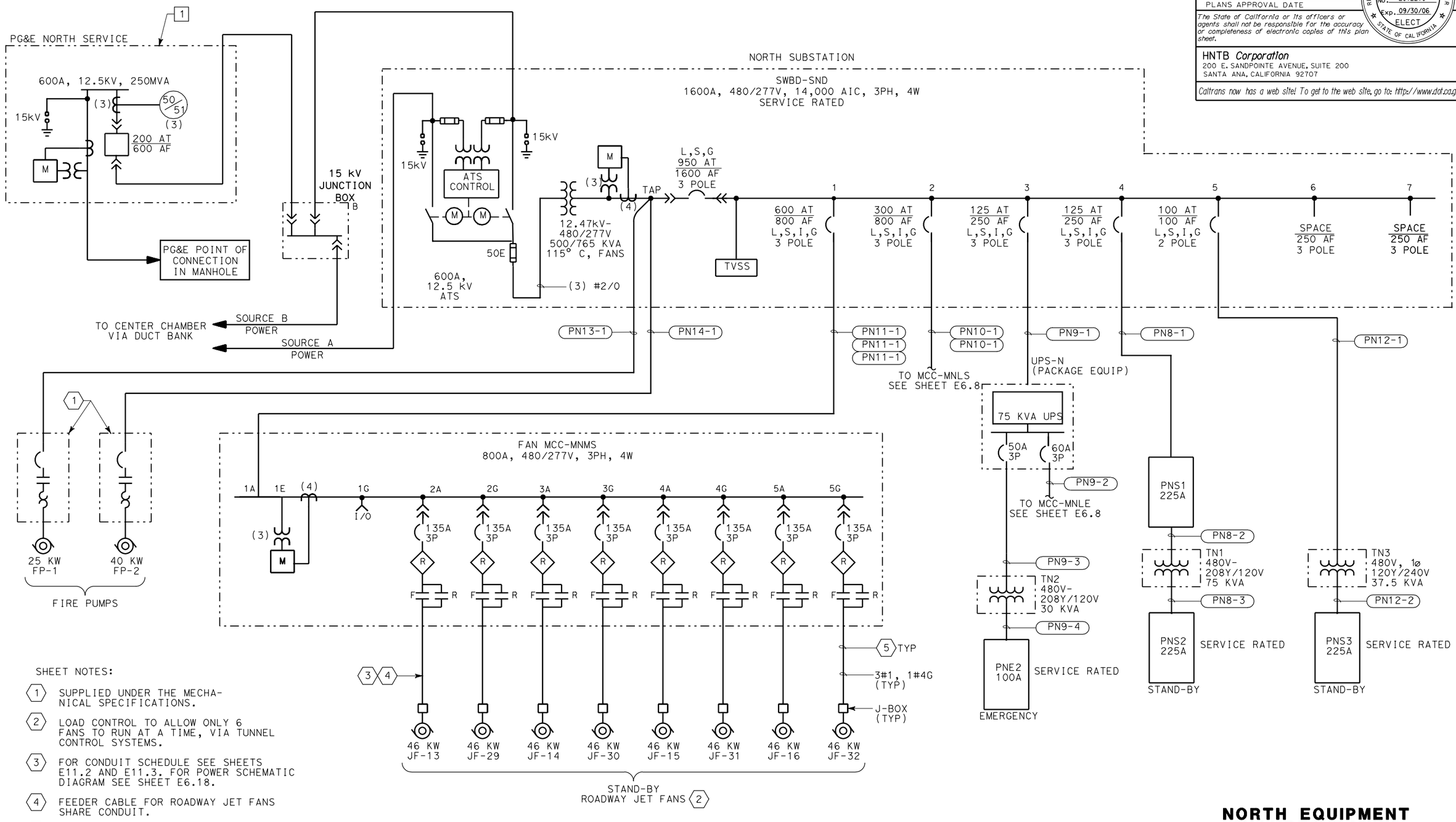

SHEET NOTES:

1. SUPPLIED UNDER THE MECHANICAL SPECIFICATIONS.
2. LOAD CONTROL TO ALLOW ONLY 6 FANS TO RUN AT A TIME, VIA TUNNEL CONTROL SYSTEMS.
3. FOR CONDUIT SCHEDULE SEE SHEETS E11.2 AND E11.3. FOR POWER SCHEMATIC DIAGRAM SEE SHEET E6.18.
4. FEEDER CABLE FOR ROADWAY JET FANS SHARE CONDUIT.
5. SEE PLAN FOR ACTUAL FEEDER ROUTING.

PS&E SUBMITTAL (11/18/05)
NOT FOR CONSTRUCTION

NORTH EQUIPMENT CHAMBER POWER ONE LINE NO. 1

E6.7

DATE	REVISED BY	DATE REVISED
9/30/05		

CALCULATED/DESIGNED BY: P. WHOBREY
CHECKED BY: M. MAUNG
DESIGN OVERSIGHT: BEHZAD GOLEMOHAMMADI

STATE OF CALIFORNIA - DEPARTMENT OF TRANSPORTATION
Caltrans
ELECTRICAL

LAST REVISION 00-00-00
DATE PLOTTED => 09-NOV-2005
TIME PLOTTED => 15:10

RELATIVE BORDER SCALE IS IN MILLIMETERS 0 20 40 60 80

USERNAME => lGraham
DGN FILE => 41123uza094.dgn

CU 04240
EA 1123U1

DIST	COUNTY	ROUTE	KILOMETER POST TOTAL PROJECT	SHEET No	TOTAL SHEETS
04	SM	1			

Min Maung 9/30/05
REGISTERED ELECTRICAL ENGINEER

PLANS APPROVAL DATE

REGISTERED PROFESSIONAL ENGINEER
MIN MAUNG
No. E012210
Exp. 09/30/06
ELECT
STATE OF CALIFORNIA

The State of California or its officers or agents shall not be responsible for the accuracy or completeness of electronic copies of this plan sheet.

HNTB *Corporation*
200 E. SANDPOINTE AVENUE, SUITE 200
SANTA ANA, CALIFORNIA 92707

Caltrans now has a web site! To get to the web site, go to: http://www.dot.ca.gov

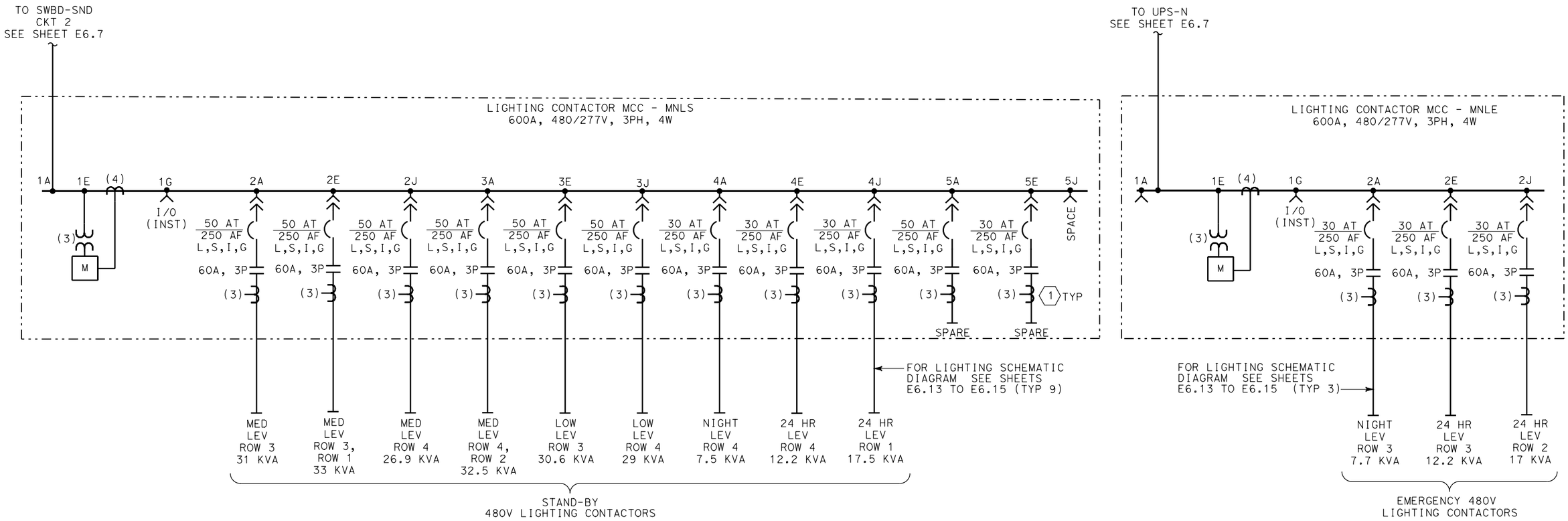

SHEET NOTES:

1 CT PROVIDED FOR INPUT TO TUNNEL CONTROL SYSTEMS.

PS&E SUBMITTAL (11/18/05)
NOT FOR CONSTRUCTION

NORTH EQUIPMENT CHAMBER POWER ONE LINE NO. 2

E6.8

STATE OF CALIFORNIA - DEPARTMENT OF TRANSPORTATION
Caltrans
ELECTRICAL

DESIGN OVERSIGHT: BEHZAD GOLEMOHAMMADI
CALCULATED/DESIGNED BY: P. WHOBREY
CHECKED BY: M. MAUNG
DATE: 9/30/05
REVISED BY
DATE REVISED

LAST REVISION 00-00-00
DATE PLOTTED => 09-NOV-2005
TIME PLOTTED => 15:10

RELATIVE BORDER SCALE IS IN MILLIMETERS 0 20 40 60 80
USERNAME => lGraham
DGN FILE => 41123uza095.dgn
CU 04240
EA 1123U1

DIST	COUNTY	ROUTE	KILOMETER POST TOTAL PROJECT	SHEET No	TOTAL SHEETS
04	SM	1			

Min Maung 9/30/05
REGISTERED ELECTRICAL ENGINEER

PLANS APPROVAL DATE

REGISTERED PROFESSIONAL ENGINEER MIN MAUNG No. E012210 Exp. 09/30/06 ELECT STATE OF CALIFORNIA

The State of California or its officers or agents shall not be responsible for the accuracy or completeness of electronic copies of this plan sheet.

HNTB *Corporation*
200 E. SANDPOINTE AVENUE, SUITE 200
SANTA ANA, CALIFORNIA 92707

Caltrans now has a web site! To get to the web site, go to: http://www.dot.ca.gov

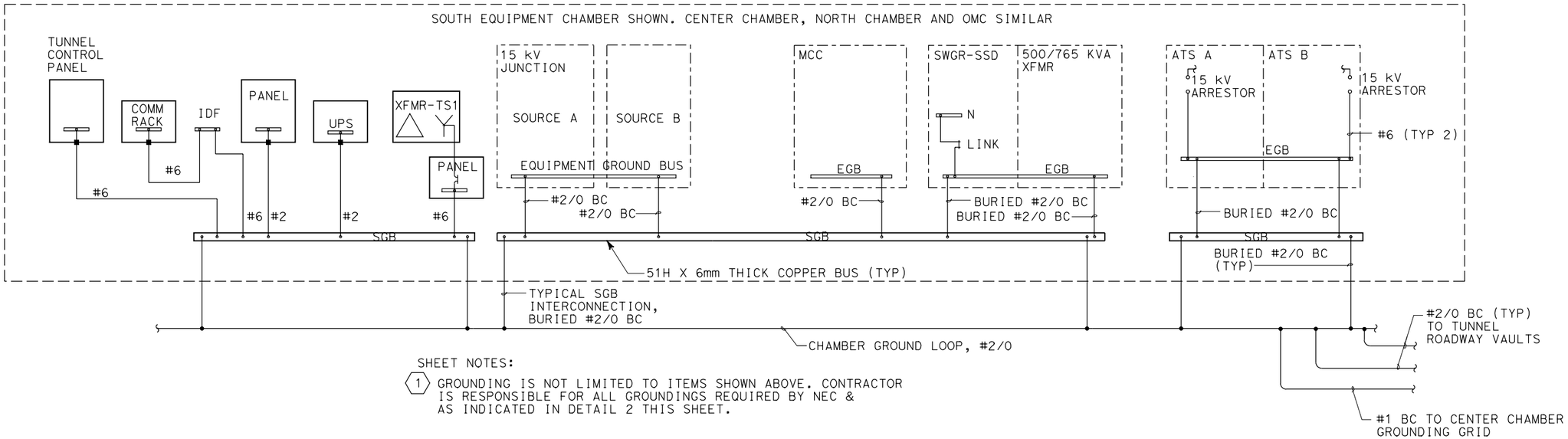

SHEET NOTES:

(1) GROUNDING IS NOT LIMITED TO ITEMS SHOWN ABOVE. CONTRACTOR IS RESPONSIBLE FOR ALL GROUNDINGS REQUIRED BY NEC & AS INDICATED IN DETAIL 2 THIS SHEET.

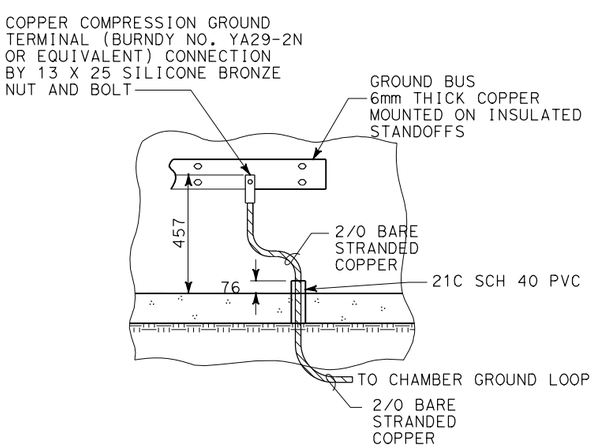

(2) GROUND BUS ELEVATION

NO SCALE

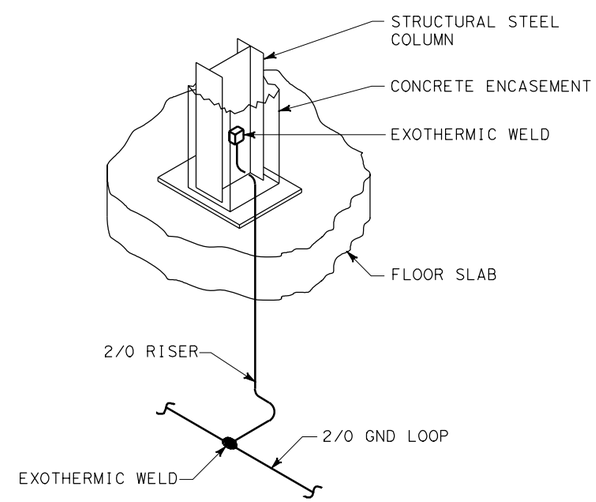

(3) OMC STEEL COLUMN BOND DETAIL

NO SCALE

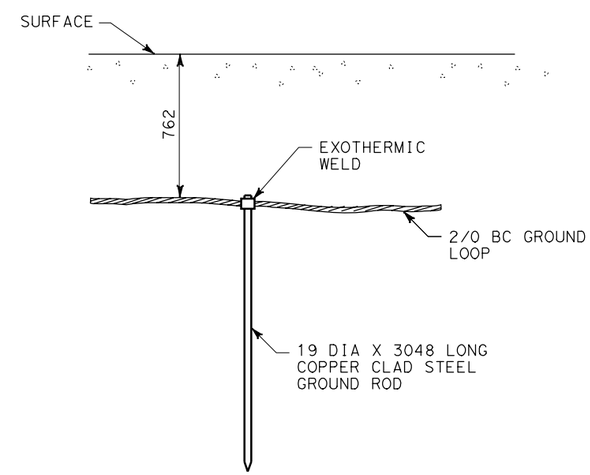

(4) GROUND ROD DETAIL

NO SCALE

PS&E SUBMITTAL (11/18/05)
NOT FOR CONSTRUCTION

ALL DIMENSIONS ARE IN MILLIMETERS UNLESS OTHERWISE SHOWN

GROUNDING RISER DIAGRAM

SCALE AS SHOWN

E6.9

	DATE	REVISED BY
CALCULATED/DESIGNED BY	P. WHOBREY	
CHECKED BY	M. MAUNG	9/30/05 DATE REVISED
DESIGN OVERSIGHT	BEHZAD GOLEMOHAMMADI	

STATE OF CALIFORNIA - DEPARTMENT OF TRANSPORTATION
Caltrans
ELECTRICAL

LAST REVISION 00-00-00
DATE PLOTTED => 09-NOV-2005
TIME PLOTTED => 15:10

RELATIVE BORDER SCALE IS IN MILLIMETERS 0 20 40 60 80

USERNAME => lGraham
DGN FILE => 41123uza096.dgn

CU 04240

EA 1123U1

DIST	COUNTY	ROUTE	KILOMETER POST TOTAL PROJECT	SHEET No	TOTAL SHEETS
04	SM	1			

Min Maung 9/30/05
REGISTERED ELECTRICAL ENGINEER

PLANS APPROVAL DATE

REGISTERED PROFESSIONAL ENGINEER MIN MAUNG No. E012210 Exp. 09/30/06 ELECT STATE OF CALIFORNIA

The State of California or its officers or agents shall not be responsible for the accuracy or completeness of electronic copies of this plan sheet.

HNTB *Corporation*
200 E. SANDPOINTE AVENUE, SUITE 200
SANTA ANA, CALIFORNIA 92707

Caltrans now has a web site! To get to the web site, go to: http://www.dot.ca.gov

MCC - MSLS (STAND-BY)

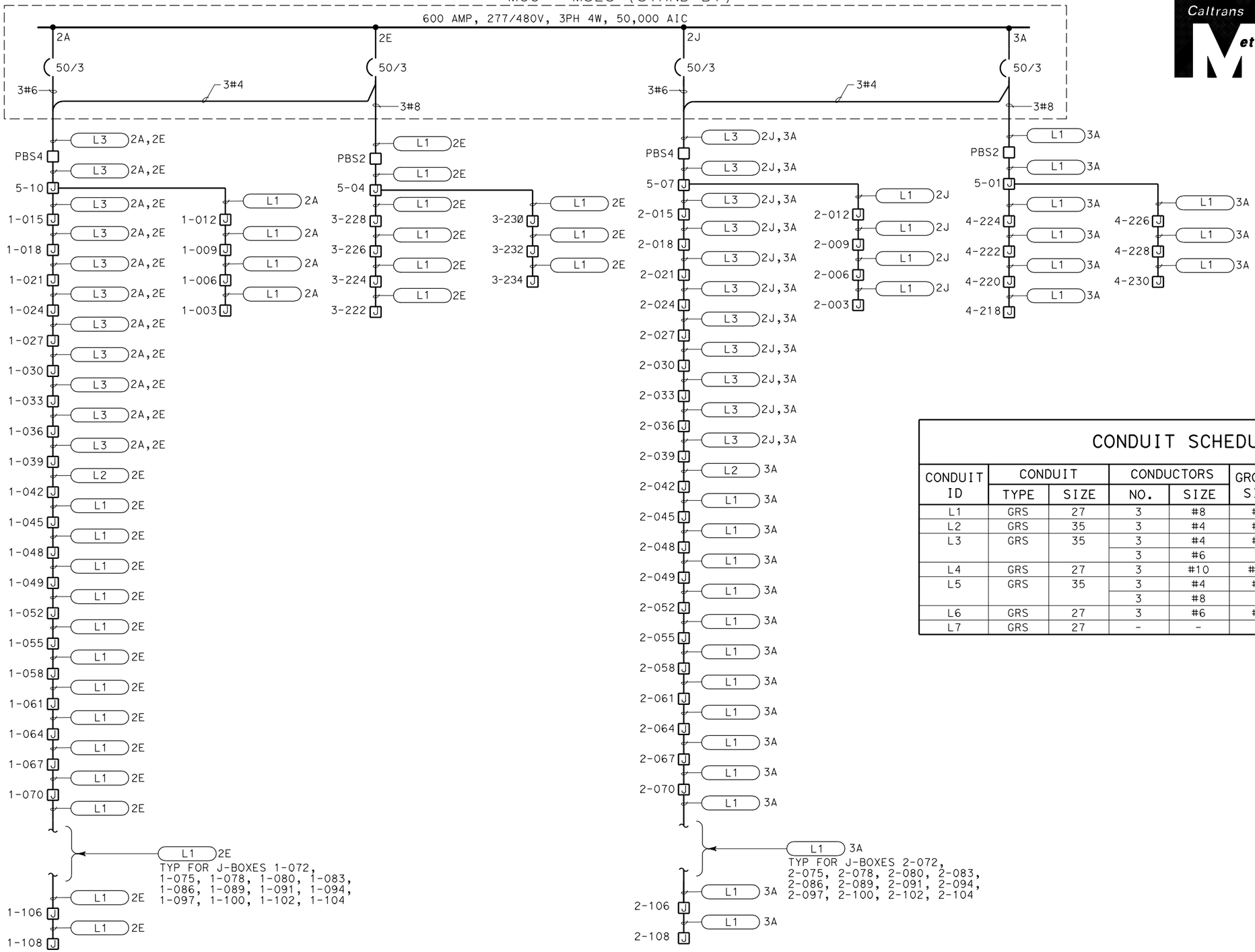

CONDUIT SCHEDULE

CONDUIT ID	CONDUIT TYPE	CONDUIT SIZE	CONDUCTORS NO.	CONDUCTORS SIZE	GROUND SIZE	NOTES
L1	GRS	27	3	#8	#8	
L2	GRS	35	3	#4	#4	
L3	GRS	35	3	#4	#4	
			3	#6		
L4	GRS	27	3	#10	#10	
L5	GRS	35	3	#4	#4	
			3	#8		
L6	GRS	27	3	#6	#6	
L7	GRS	27	-	-	-	EMPTY

PS&E SUBMITTAL (11/18/05)
NOT FOR CONSTRUCTION

ALL DIMENSIONS ARE IN MILLIMETERS UNLESS OTHERWISE SHOWN

LIGHTING SCHEMATIC DIAGRAM NO. 1

E6.10

DATE	REVISED BY	DATE REVISED

CALCULATED/DESIGNED BY: A. GOROVAYA
CHECKED BY: M. MAUNG
DESIGN OVERSIGHT: BEHZAD GOLEMOHAMMADI

STATE OF CALIFORNIA - DEPARTMENT OF TRANSPORTATION
Caltrans
ELECTRICAL

LAST REVISION 00-00-00
DATE PLOTTED => 09-NOV-2005
TIME PLOTTED => 15:10

RELATIVE BORDER SCALE IS IN MILLIMETERS 0 20 40 60 80

USERNAME => lGraham
DGN FILE => 41123uza097.dgn

CU 04240

EA 1123U1

DIST	COUNTY	ROUTE	KILOMETER POST TOTAL PROJECT	SHEET No	TOTAL SHEETS
04	SM	1			

Min Maung 9/30/05
REGISTERED ELECTRICAL ENGINEER

PLANS APPROVAL DATE

REGISTERED PROFESSIONAL ENGINEER MIN MAUNG No. E012210 Exp. 09/30/06 ELECT STATE OF CALIFORNIA

The State of California or its officers or agents shall not be responsible for the accuracy or completeness of electronic copies of this plan sheet.

HNTB *Corporation*
200 E. SANDPOINTE AVENUE, SUITE 200
SANTA ANA, CALIFORNIA 92707

Caltrans now has a web site! To get to the web site, go to: http://www.dot.ca.gov

Caltrans Metric

MCC - MSLS (CONTINUATION)

600 AMP, 277/480V, 3PH 4W, 50,000 AIC

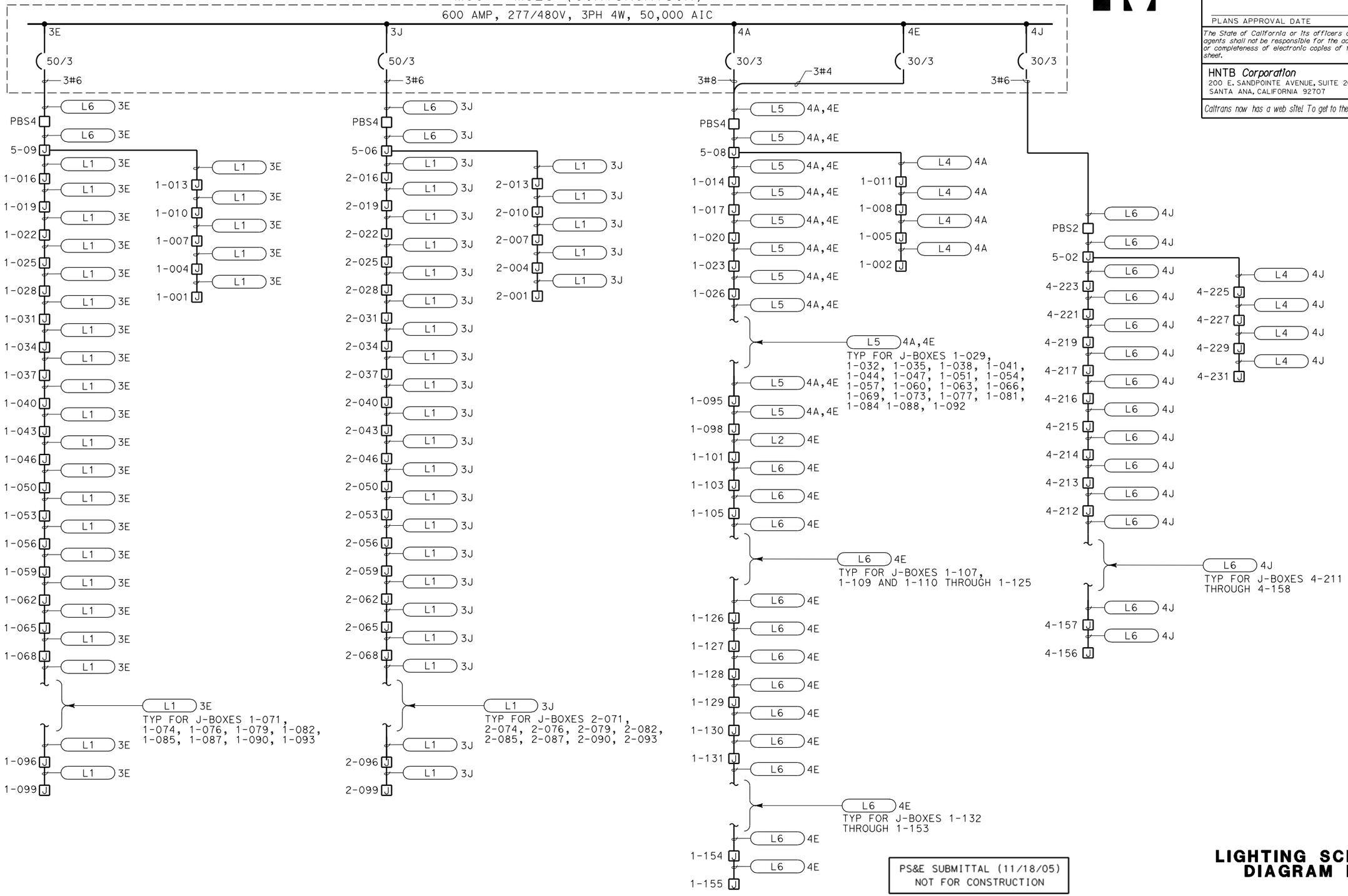

PS&E SUBMITTAL (11/18/05)
NOT FOR CONSTRUCTION

LIGHTING SCHEMATIC DIAGRAM NO. 2

E6.11

DATE	REVISED BY	DATE REVISED
9/30/05		

CALCULATED/DESIGNED BY: A. GOROVAYA
CHECKED BY: M. MAUNG

DESIGN OVERSIGHT: BEHZAD GOLEMOHAMMADI

STATE OF CALIFORNIA - DEPARTMENT OF TRANSPORTATION
Caltrans
ELECTRICAL

LAST REVISION 00-00-00
DATE PLOTTED => 09-NOV-2005
TIME PLOTTED => 15:10

RELATIVE BORDER SCALE IS IN MILLIMETERS 0 20 40 60 80

USERNAME => lGraham
DGN FILE => 41123uza098.dgn

CU 04240

EA 1123U1

DIST	COUNTY	ROUTE	KILOMETER POST TOTAL PROJECT	SHEET No	TOTAL SHEETS
04	SM	1			

Min Maung 9/30/05
REGISTERED ELECTRICAL ENGINEER

PLANS APPROVAL DATE

REGISTERED PROFESSIONAL ENGINEER MIN MAUNG No. E012210 Exp. 09/30/06 ELECT STATE OF CALIFORNIA

The State of California or its officers or agents shall not be responsible for the accuracy or completeness of electronic copies of this plan sheet.

HNTB *Corporation*
200 E. SANDPOINTE AVENUE, SUITE 200
SANTA ANA, CALIFORNIA 92707

Caltrans now has a web site! To get to the web site, go to: http://www.dot.ca.gov

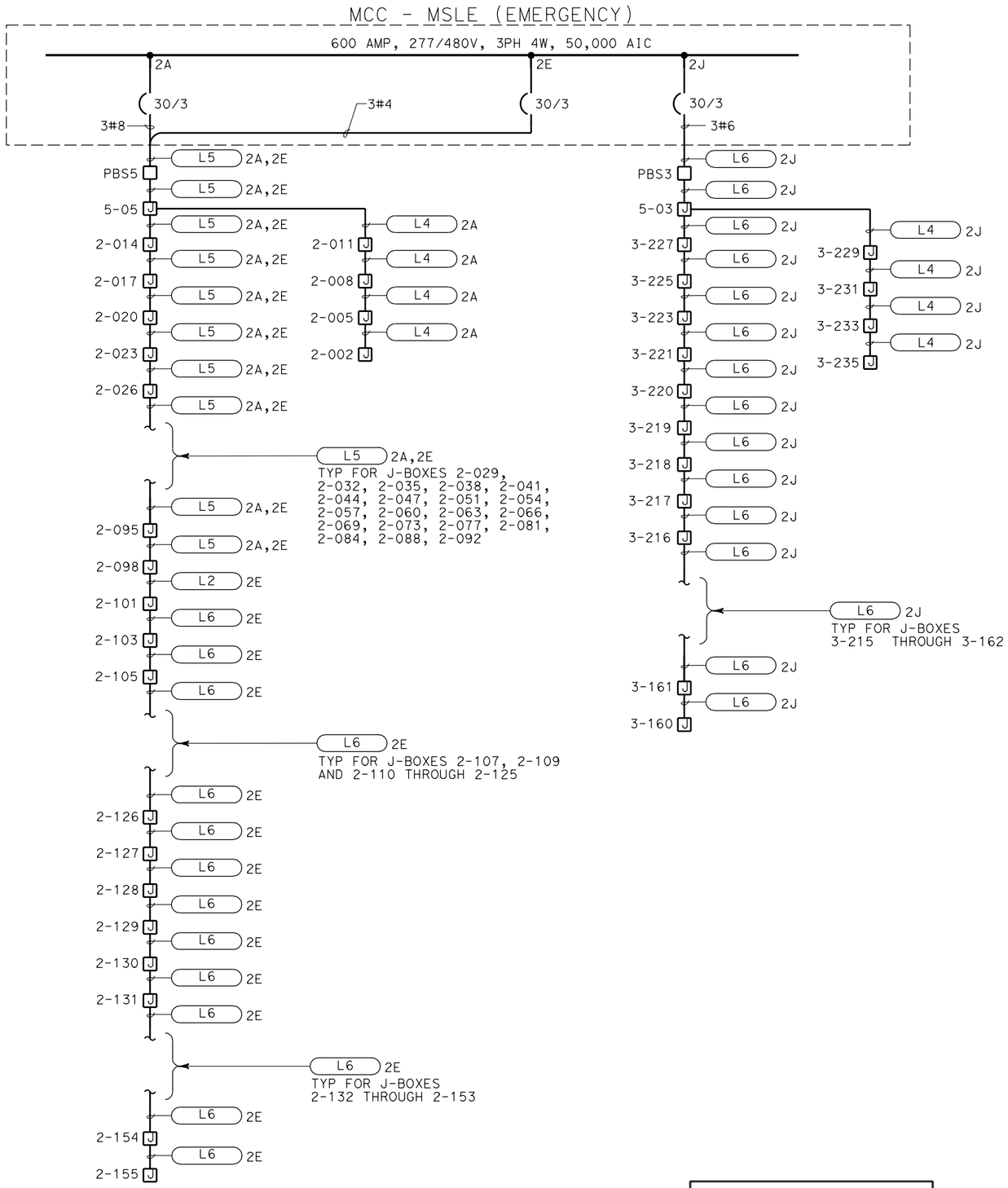

PS&E SUBMITTAL (11/18/05)
NOT FOR CONSTRUCTION

LIGHTING SCHEMATIC DIAGRAM NO. 3

E6.12

STATE OF CALIFORNIA - DEPARTMENT OF TRANSPORTATION
Caltrans
ELECTRICAL

DESIGN OVERSIGHT: BEHZAD GOLEMOHAMMADI
CALCULATED/DESIGNED BY: A. GOROVAYA
CHECKED BY: M. MAUNG
DATE: 9/30/05
REVISED BY
DATE REVISED

LAST REVISION 00-00-00
DATE PLOTTED => 09-NOV-2005
TIME PLOTTED => 15:10

RELATIVE BORDER SCALE IS IN MILLIMETERS 0 20 40 60 80
USERNAME => lGraham
DGN FILE => 41123uza099.dgn
CU 04240
EA 1123U1

DIST	COUNTY	ROUTE	KILOMETER POST TOTAL PROJECT	SHEET No	TOTAL SHEETS
04	SM	1			

Min Maung 9/30/05
REGISTERED ELECTRICAL ENGINEER

PLANS APPROVAL DATE

REGISTERED PROFESSIONAL ENGINEER MIN MAUNG No. E012210 Exp. 09/30/06 ELECT STATE OF CALIFORNIA

The State of California or its officers or agents shall not be responsible for the accuracy or completeness of electronic copies of this plan sheet.

HNTB *Corporation*
200 E. SANDPOINTE AVENUE, SUITE 200
SANTA ANA, CALIFORNIA 92707

Caltrans now has a web site! To get to the web site, go to: http://www.dot.ca.gov

Caltrans Metric

MCC - MNLS (STAND-BY)

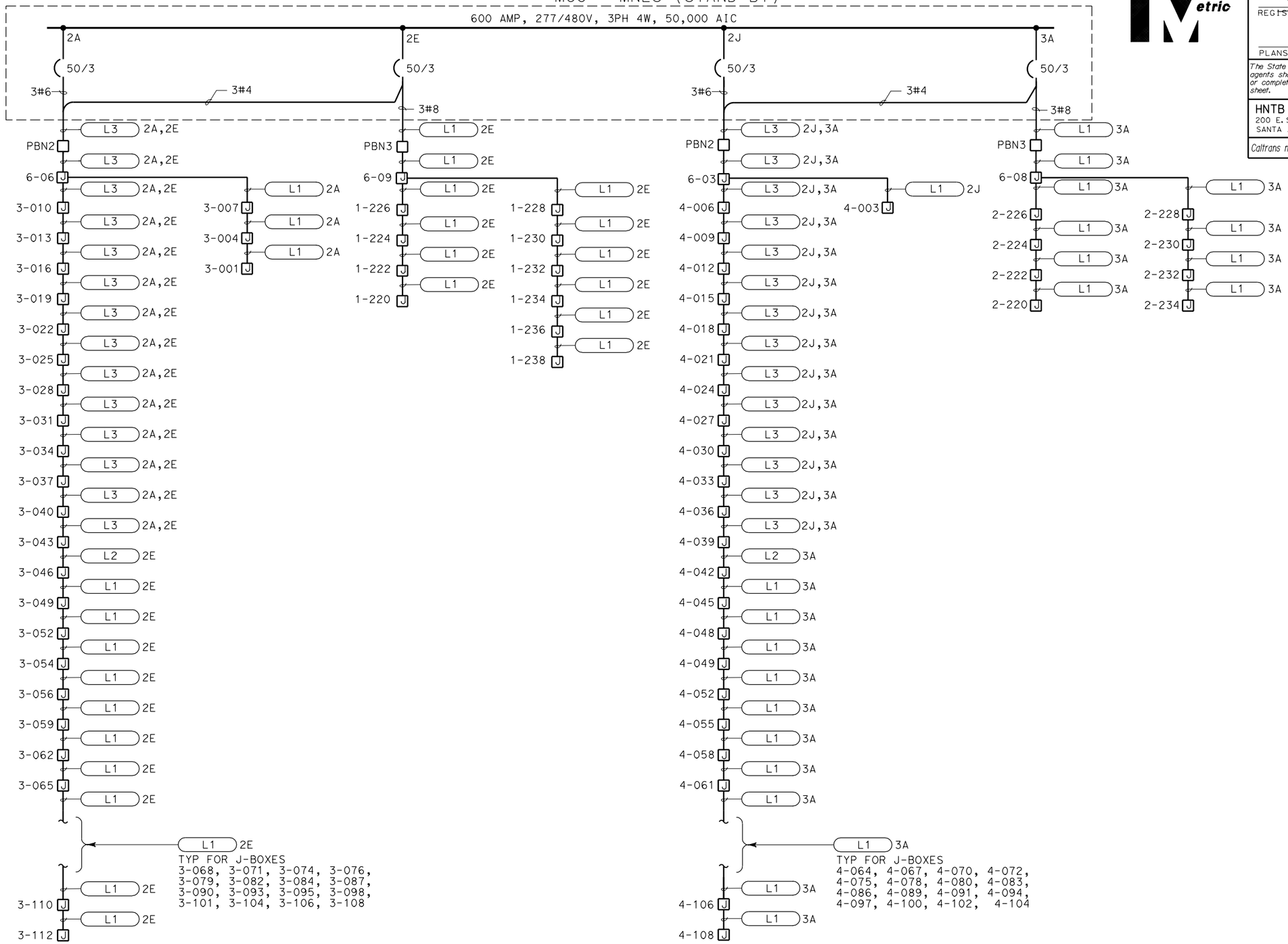

PS&E SUBMITTAL (11/18/05)
NOT FOR CONSTRUCTION

LIGHTING SCHEMATIC DIAGRAM NO. 4

E6.13

STATE OF CALIFORNIA - DEPARTMENT OF TRANSPORTATION
Caltrans **ELECTRICAL**

DESIGN OVERSIGHT: BEHZAD GOLEMOHAMMADI

CALCULATED/DESIGNED BY: A. GOROVAYA
CHECKED BY: M. MAUNG

REVISED BY	DATE REVISED

DATE: 9/30/05

LAST REVISION 00-00-00 | DATE PLOTTED => 09-NOV-2005 | TIME PLOTTED => 15:10

RELATIVE BORDER SCALE IS IN MILLIMETERS 0 20 40 60 80

USERNAME => lGraham
DGN FILE => 41123uza100.dgn

CU 04240

EA 1123U1

MCC - MNLS (CONTINUATION)

DIST	COUNTY	ROUTE	KILOMETER POST TOTAL PROJECT	SHEET No	TOTAL SHEETS
04	SM	1			

Min Maung 9/30/05
REGISTERED ELECTRICAL ENGINEER

PLANS APPROVAL DATE

REGISTERED PROFESSIONAL ENGINEER MIN MAUNG No. E012210 Exp. 09/30/06 ELECT STATE OF CALIFORNIA

The State of California or its officers or agents shall not be responsible for the accuracy or completeness of electronic copies of this plan sheet.

HNTB *Corporation*
200 E. SANDPOINTE AVENUE, SUITE 200
SANTA ANA, CALIFORNIA 92707

Caltrans now has a web site! To get to the web site, go to: http://www.dot.ca.gov

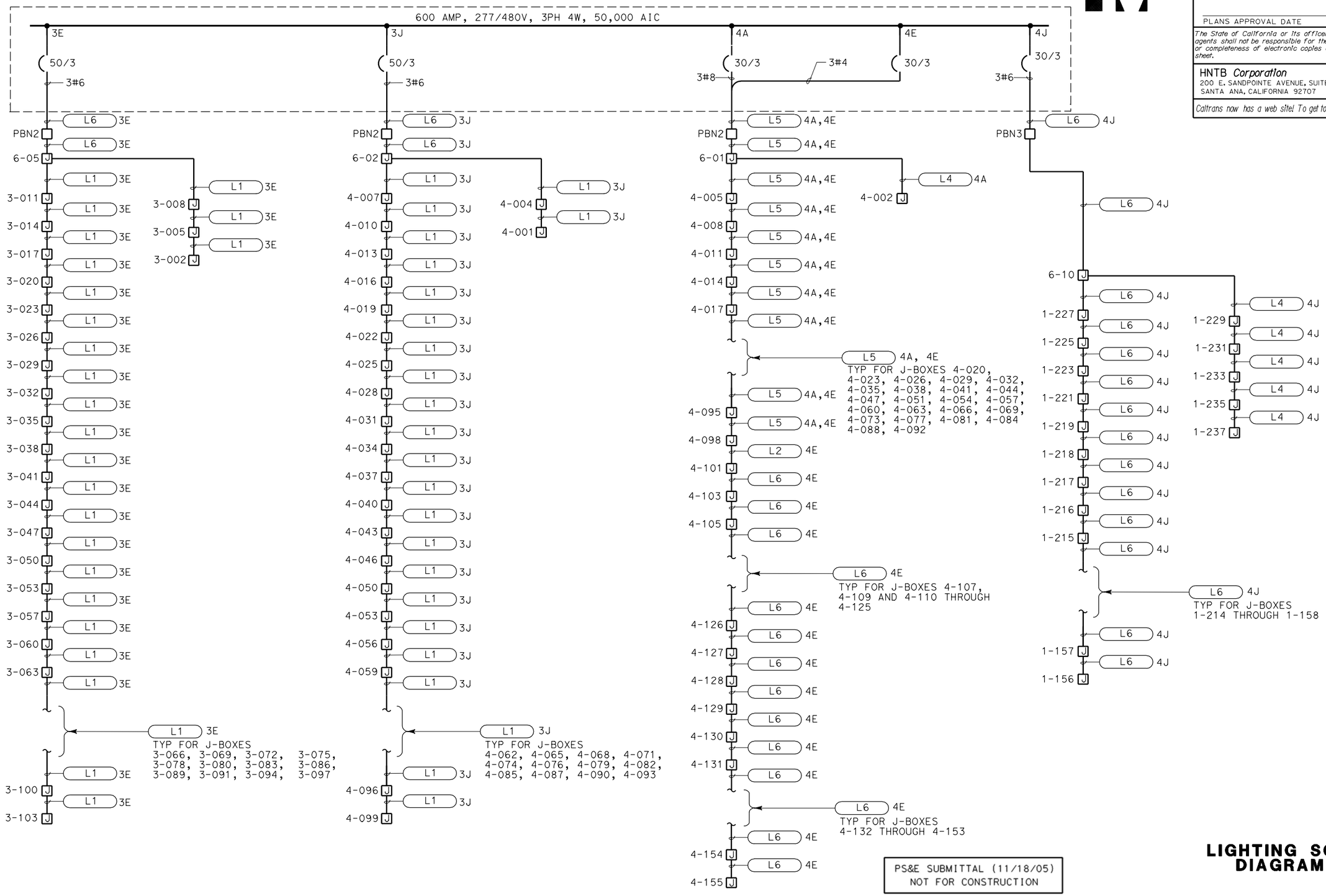

PS&E SUBMITTAL (11/18/05)
NOT FOR CONSTRUCTION

LIGHTING SCHEMATIC DIAGRAM NO. 5

E6.14

DATE	REVISED BY	DATE REVISED
9/30/05		

CALCULATED/DESIGNED BY: A. GOROVAYA
CHECKED BY: M. MAUNG
DESIGN OVERSIGHT: BEHZAD GOLEMOHAMMADI

STATE OF CALIFORNIA - DEPARTMENT OF TRANSPORTATION
Caltrans
ELECTRICAL

LAST REVISION 00-00-00
DATE PLOTTED => 09-NOV-2005
TIME PLOTTED => 15:10

RELATIVE BORDER SCALE IS IN MILLIMETERS 0 20 40 60 80

USERNAME => lGraham
DGN FILE => 41123uza101.dgn

CU 04240

EA 1123U1

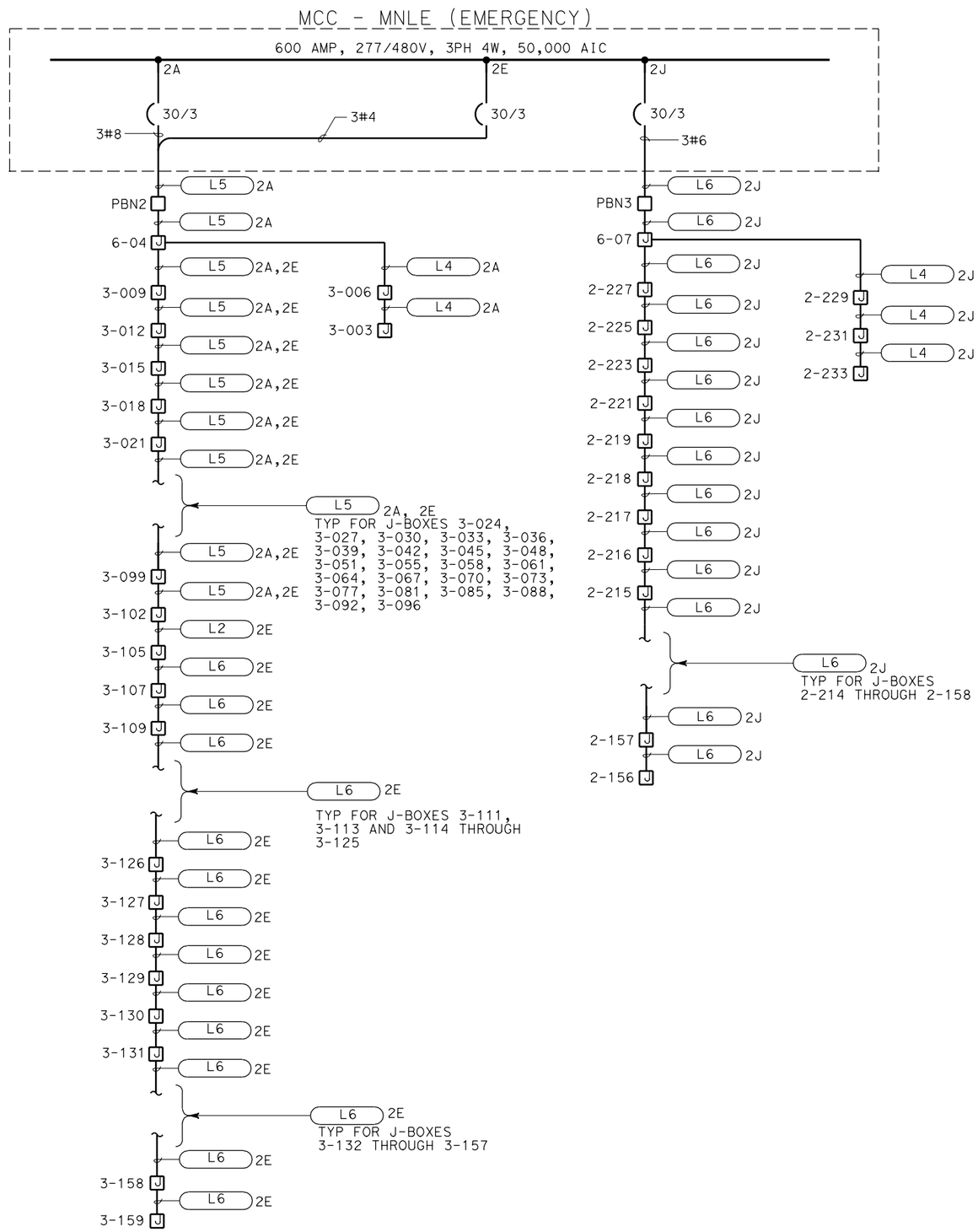

PS&E SUBMITTAL (11/18/05)
NOT FOR CONSTRUCTION

LIGHTING SCHEMATIC DIAGRAM NO. 6

E6.15

DIST	COUNTY	ROUTE	KILOMETER POST TOTAL PROJECT	SHEET No	TOTAL SHEETS
04	SM	1			

Min Maung 9/30/05
REGISTERED ELECTRICAL ENGINEER

PLANS APPROVAL DATE

REGISTERED PROFESSIONAL ENGINEER MIN MAUNG No. E012210 Exp. 09/30/06 ELECT STATE OF CALIFORNIA

The State of California or its officers or agents shall not be responsible for the accuracy or completeness of electronic copies of this plan sheet.

HNTB *Corporation*
200 E. SANDPOINTE AVENUE, SUITE 200
SANTA ANA, CALIFORNIA 92707

Caltrans now has a web site! To get to the web site, go to: http://www.dot.ca.gov

Caltrans Metric

		DATE	REVISED BY	DATE REVISED
CALCULATED/DESIGNED BY	A. GOROVAYA	9/30/05	M. MAUNG	
CHECKED BY	M. MAUNG			

DESIGN OVERSIGHT
BEHZAD GOLEMOHAMMADI

STATE OF CALIFORNIA - DEPARTMENT OF TRANSPORTATION
Caltrans
ELECTRICAL

LAST REVISION 00-00-00
DATE PLOTTED => 09-NOV-2005
TIME PLOTTED => 15:10

RELATIVE BORDER SCALE IS IN MILLIMETERS 0 20 40 60 80

USERNAME => lGraham
DGN FILE => 41123uza102.dgn

CU 04240

EA 1123U1

DIST	COUNTY	ROUTE	KILOMETER POST TOTAL PROJECT	SHEET No	TOTAL SHEETS
04	SM	1			

Min Maung 9/30/05
REGISTERED ELECTRICAL ENGINEER

PLANS APPROVAL DATE

REGISTERED PROFESSIONAL ENGINEER MIN MAUNG No. E012210 Exp. 09/30/06 ELECT STATE OF CALIFORNIA

The State of California or its officers or agents shall not be responsible for the accuracy or completeness of electronic copies of this plan sheet.

HNTB *Corporation*
200 E. SANDPOINTE AVENUE, SUITE 200
SANTA ANA, CALIFORNIA 92707

Caltrans now has a web site! To get to the web site, go to: http://www.dot.ca.gov

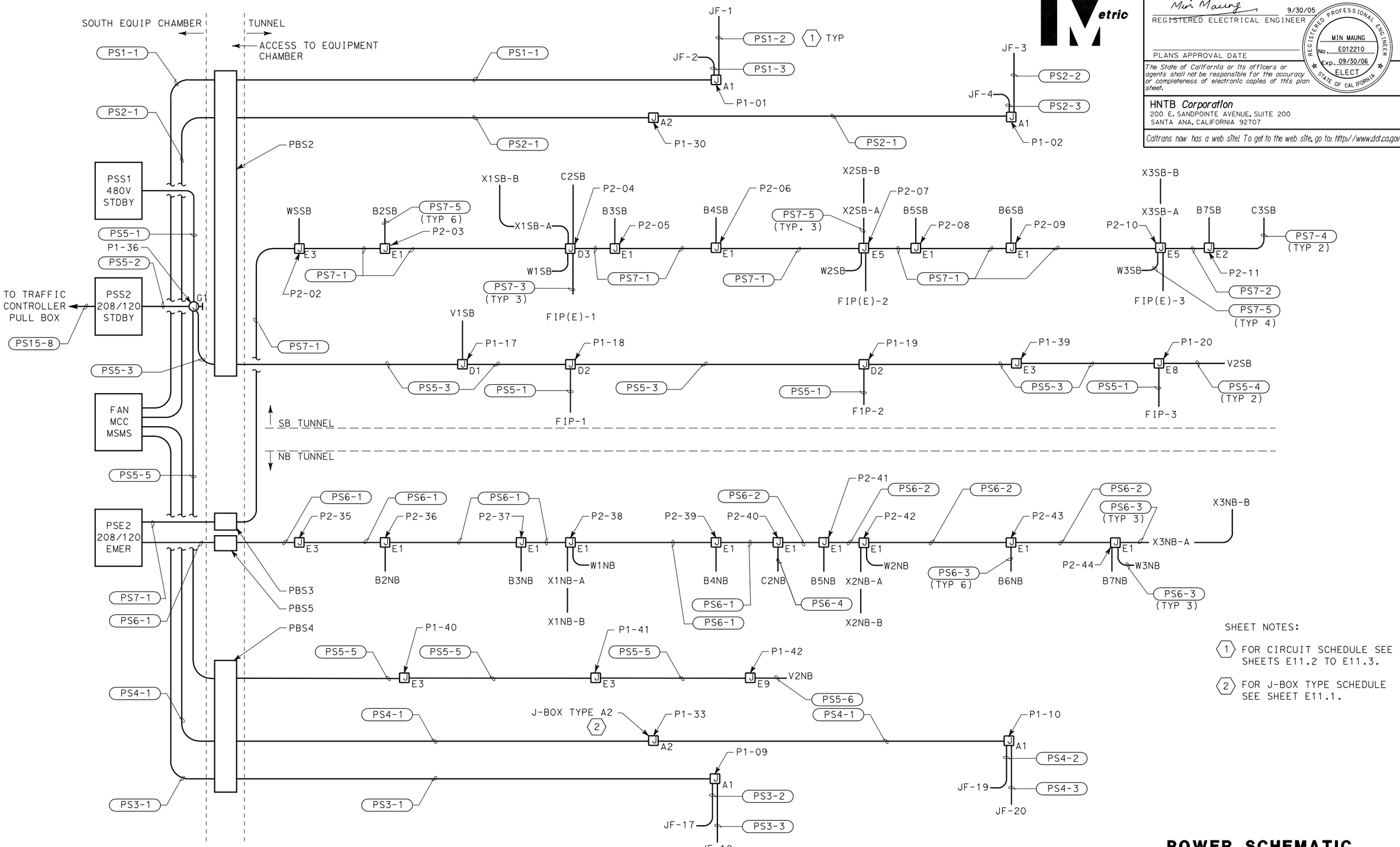

SHEET NOTES:

1. FOR CIRCUIT SCHEDULE SEE SHEETS E11.2 TO E11.3.
2. FOR J-BOX TYPE SCHEDULE SEE SHEET E11.1.

PS&E SUBMITTAL (11/18/05)
NOT FOR CONSTRUCTION

POWER SCHEMATIC DIAGRAM NO. 1

E6.16

DATE	REVISED BY	DATE REVISED
9/30/05	M. MAUNG	

CALCULATED/DESIGNED BY: P. WHOBREY
CHECKED BY: M. MAUNG

DESIGN OVERSIGHT: BEHZAD GOLEMOHAMMADI

STATE OF CALIFORNIA - DEPARTMENT OF TRANSPORTATION
Caltrans
ELECTRICAL

LAST REVISION 00-00-00
DATE PLOTTED => 09-NOV-2005
TIME PLOTTED => 15:10

RELATIVE BORDER SCALE IS IN MILLIMETERS 0 20 40 60 80

USERNAME => lGraham
DGN FILE => 41123uza103.dgn

CU 04240

EA 1123U1

DIST	COUNTY	ROUTE	KILOMETER POST TOTAL PROJECT	SHEET No	TOTAL SHEETS
04	SM	1			

Min Maung 9/30/05
REGISTERED ELECTRICAL ENGINEER

PLANS APPROVAL DATE

REGISTERED PROFESSIONAL ENGINEER MIN MAUNG No. E012210 Exp. 09/30/06 ELECT STATE OF CALIFORNIA

The State of California or its officers or agents shall not be responsible for the accuracy or completeness of electronic copies of this plan sheet.

HNTB *Corporation*
200 E. SANDPOINTE AVENUE, SUITE 200
SANTA ANA, CALIFORNIA 92707

Caltrans now has a web site! To get to the web site, go to: http://www.dot.ca.gov

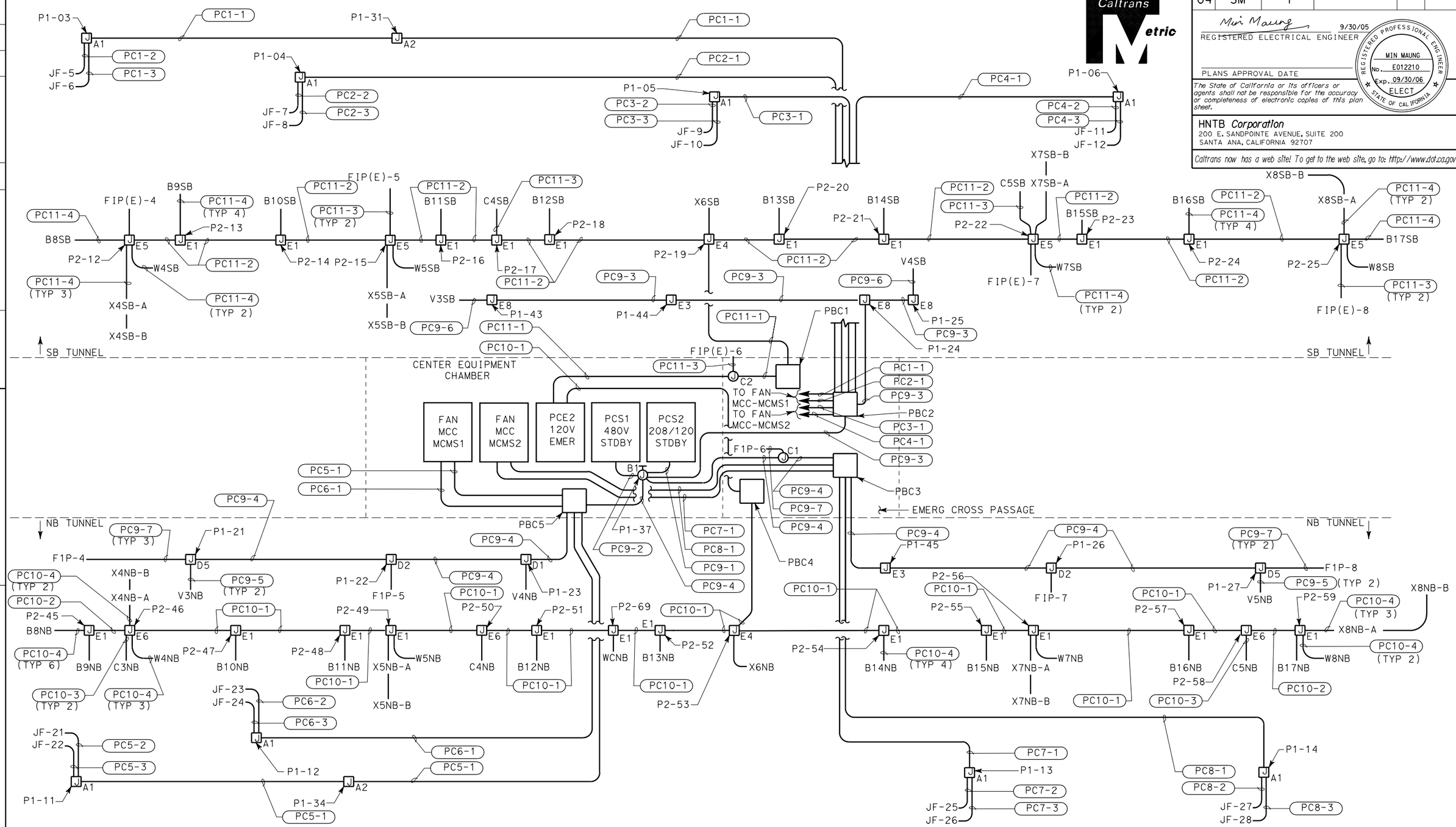

PS&E SUBMITTAL (11/18/05)
NOT FOR CONSTRUCTION

POWER SCHEMATIC DIAGRAM NO. 2

E6.17

DATE	REVISED BY	DATE REVISED
9/30/05		

CALCULATED/DESIGNED BY: P. WHOBREY
CHECKED BY: M. MAUNG
DESIGN OVERSIGHT: BEHZAD GOLEMOHAMMADI

STATE OF CALIFORNIA - DEPARTMENT OF TRANSPORTATION
Caltrans
ELECTRICAL

LAST REVISION 00-00-00
DATE PLOTTED => 09-NOV-2005
TIME PLOTTED => 15:10

RELATIVE BORDER SCALE IS IN MILLIMETERS 0 20 40 60 80

USERNAME => lGraham
DGN FILE => 41123uza104.dgn

CU 04240

EA 1123U1

DIST	COUNTY	ROUTE	KILOMETER POST TOTAL PROJECT	SHEET No	TOTAL SHEETS
04	SM	1			

Min Maung 9/30/05
REGISTERED ELECTRICAL ENGINEER

PLANS APPROVAL DATE

REGISTERED PROFESSIONAL ENGINEER MIN MAUNG No. E012210 Exp. 09/30/06 ELECT STATE OF CALIFORNIA

The State of California or its officers or agents shall not be responsible for the accuracy or completeness of electronic copies of this plan sheet.

HNTB *Corporation*
200 E. SANDPOINTE AVENUE, SUITE 200
SANTA ANA, CALIFORNIA 92707

Caltrans now has a web site! To get to the web site, go to: http://www.dot.ca.gov

Caltrans Metric

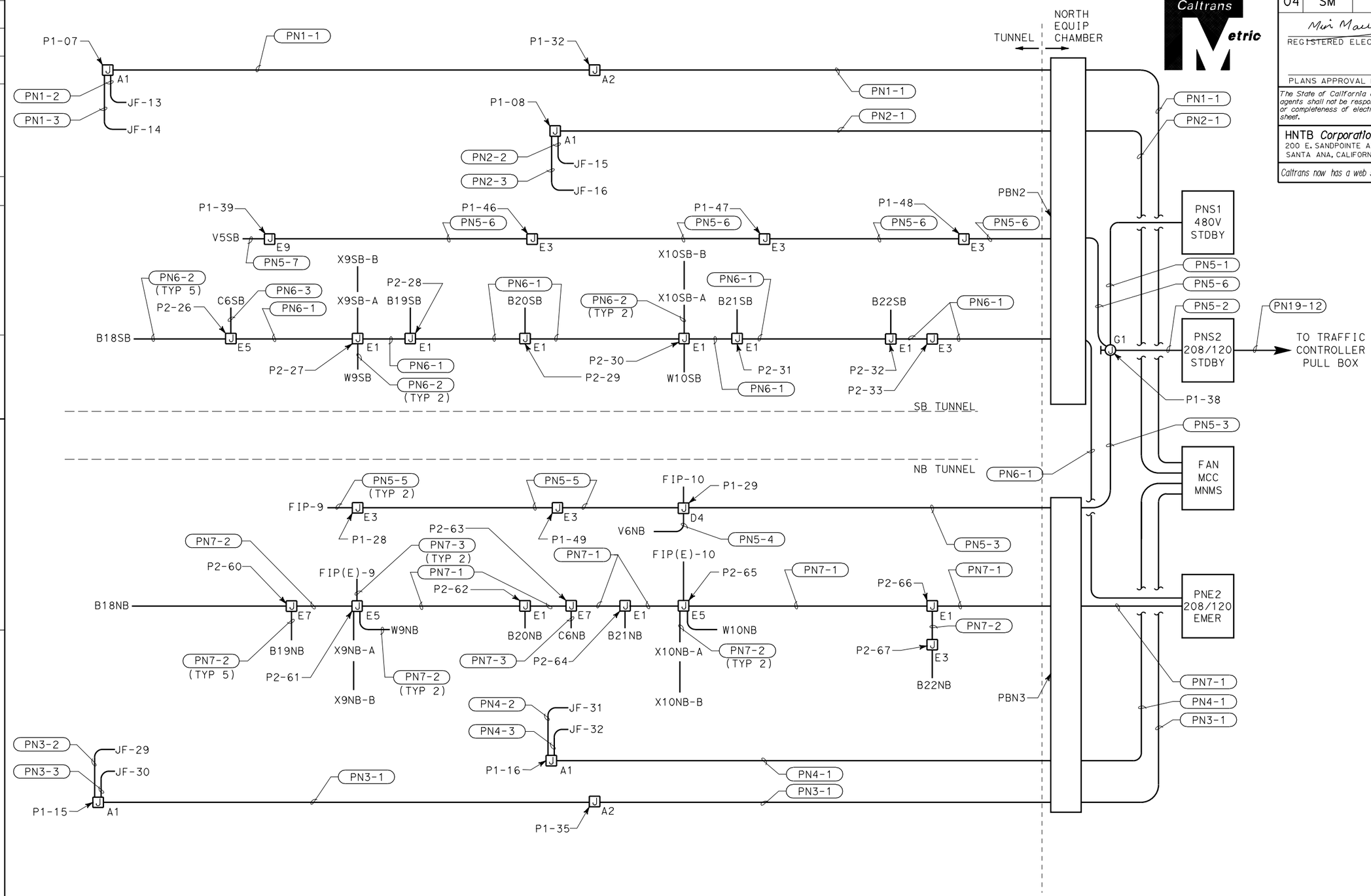

PS&E SUBMITTAL (11/18/05)
NOT FOR CONSTRUCTION

POWER SCHEMATIC DIAGRM NO. 3

E6.18

DATE	REVISED BY	DATE REVISED
9/30/05		

CALCULATED/DESIGNED BY: P. WHOBREY
CHECKED BY: M. MAUNG
DESIGN OVERSIGHT: BEHZAD GOLEMOHAMMADI

STATE OF CALIFORNIA - DEPARTMENT OF TRANSPORTATION
Caltrans
ELECTRICAL

LAST REVISION 00-00-00
DATE PLOTTED => 09-NOV-2005
TIME PLOTTED => 15:10

RELATIVE BORDER SCALE IS IN MILLIMETERS 0 20 40 60 80

USERNAME => lGraham
DGN FILE => 41123uza105.dgn

CU 04240

EA 1123U1

DIST	COUNTY	ROUTE	KILOMETER POST TOTAL PROJECT	SHEET No	TOTAL SHEETS
04	SM	1			

Min Maung 9/30/05
REGISTERED ELECTRICAL ENGINEER

PLANS APPROVAL DATE

REGISTERED PROFESSIONAL ENGINEER MIN MAUNG No. E012210 Exp. 09/30/06 ELECT STATE OF CALIFORNIA

The State of California or its officers or agents shall not be responsible for the accuracy or completeness of electronic copies of this plan sheet.

HNTB *Corporation*
200 E. SANDPOINTE AVENUE, SUITE 200
SANTA ANA, CALIFORNIA 92707

Caltrans now has a web site! To get to the web site, go to: http://www.dot.ca.gov

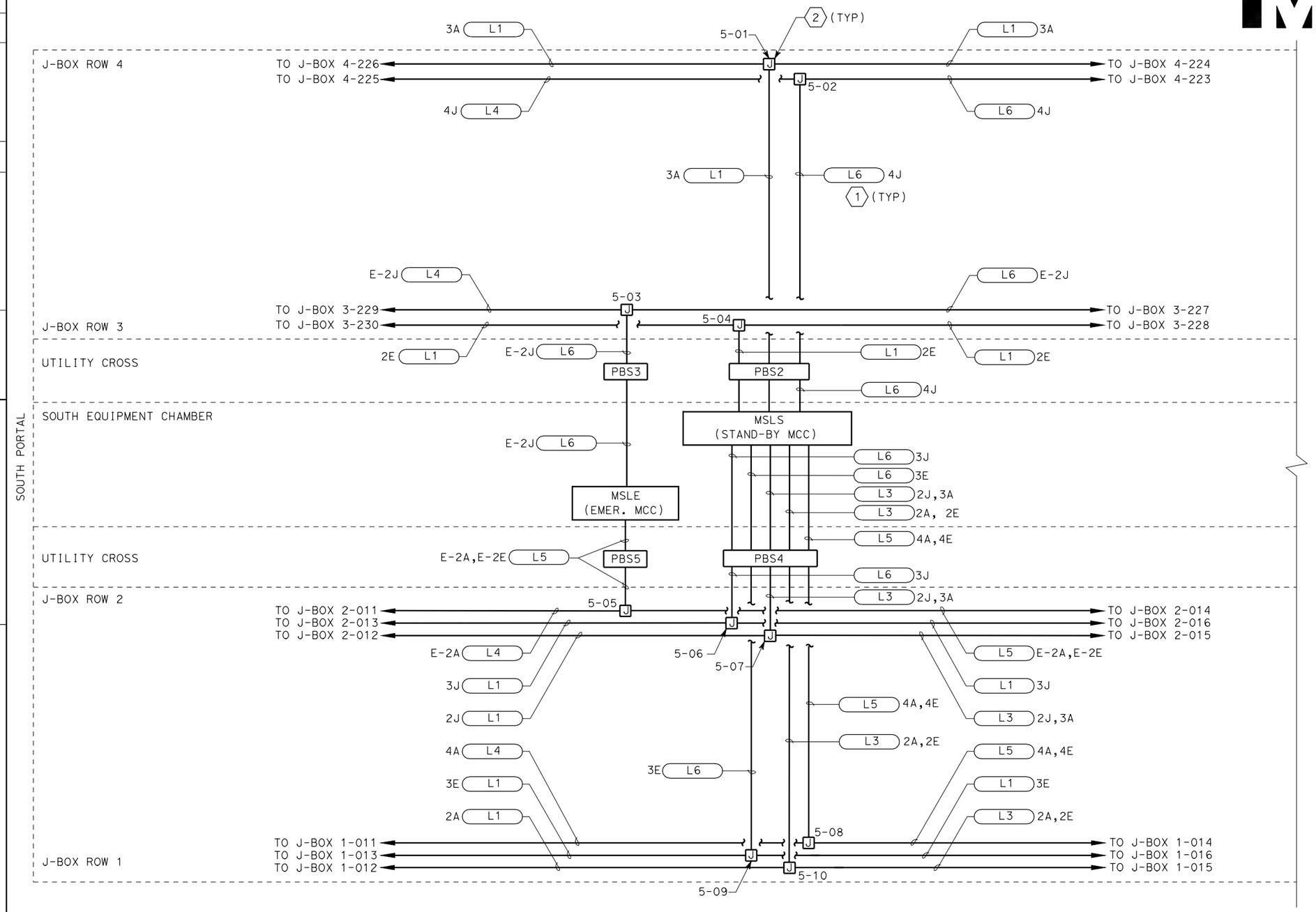

SHEET NOTES:

1. SEE LIGHTING CONDUIT AND WIRE SCHEDULE ON SHEET E6.10.
2. SEE JUNCTION BOXES SCHEDULE ON SHEET E10.4.

PS&E SUBMITTAL (11/18/05)
NOT FOR CONSTRUCTION

LIGHTING CONDUIT DIAGRAM NO. 1

E6.19

STATE OF CALIFORNIA - DEPARTMENT OF TRANSPORTATION
Caltrans
ELECTRICAL

DESIGN OVERSIGHT: BEHZAD GOLEMOHAMMADI
CALCULATED/DESIGNED BY: P. WHOBREY
CHECKED BY: M. MAUNG
REVISED BY / DATE REVISED: 9/30/05

LAST REVISION 00-00-00
DATE PLOTTED => 09-NOV-2005
TIME PLOTTED => 15:10

RELATIVE BORDER SCALE IS IN MILLIMETERS 0 20 40 60 80
USERNAME => lGraham
DGN FILE => 41123uza106.dgn
CU 04240
EA 1123U1

DIST	COUNTY	ROUTE	KILOMETER POST TOTAL PROJECT	SHEET No	TOTAL SHEETS
04	SM	1			

Min Maung 9/30/05
REGISTERED ELECTRICAL ENGINEER

PLANS APPROVAL DATE

REGISTERED PROFESSIONAL ENGINEER MIN MAUNG No. E012210 Exp. 09/30/06 ELECT STATE OF CALIFORNIA

The State of California or its officers or agents shall not be responsible for the accuracy or completeness of electronic copies of this plan sheet.

HNTB *Corporation*
200 E. SANDPOINTE AVENUE, SUITE 200
SANTA ANA, CALIFORNIA 92707

Caltrans now has a web site! To get to the web site, go to: http://www.dot.ca.gov

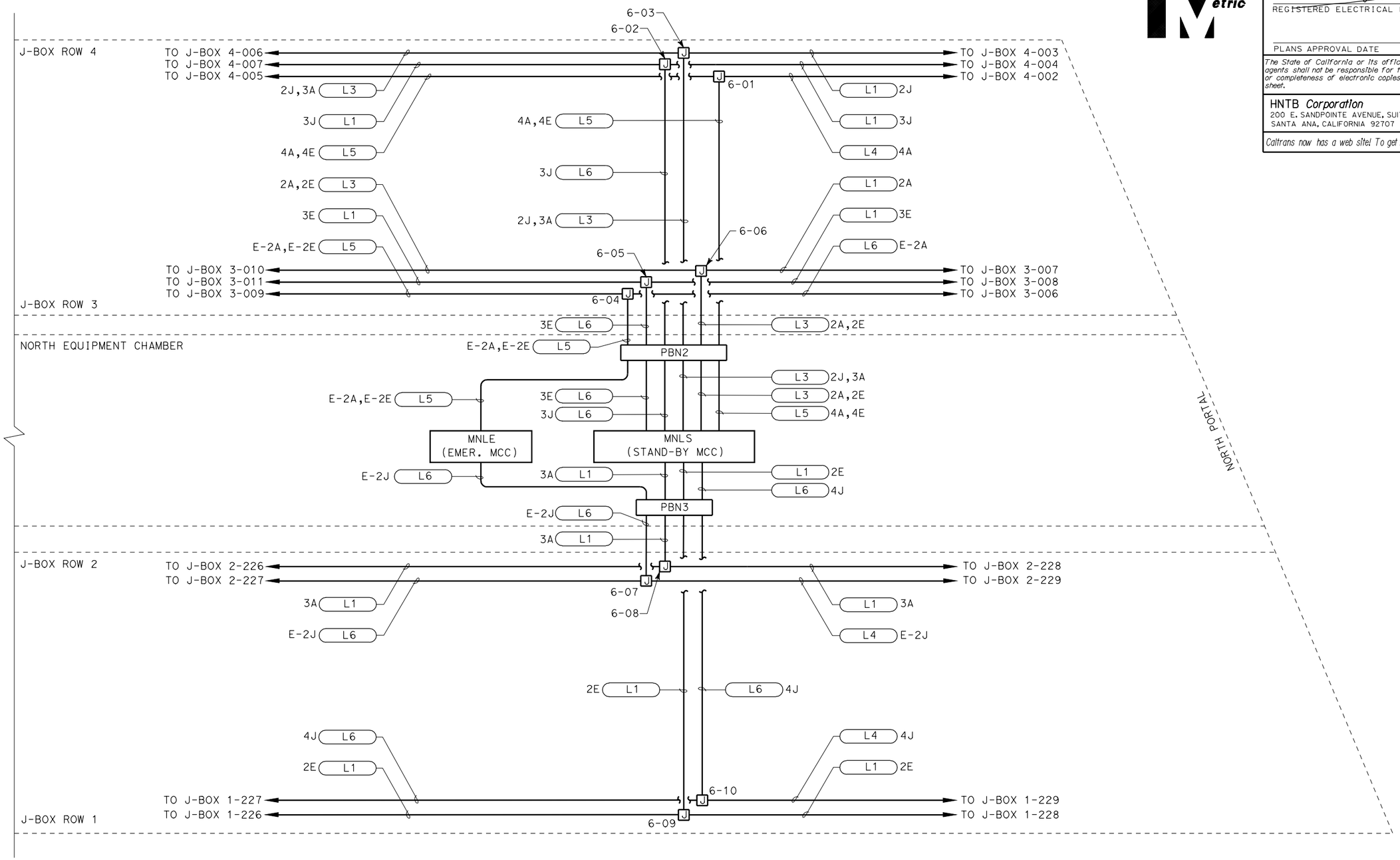

PS&E SUBMITTAL (11/18/05)
NOT FOR CONSTRUCTION

LIGHTING CONDUIT DIAGRAM NO. 2

E6.20

	DATE	REVISED BY	DATE REVISED
CALCULATED/DESIGNED BY	P. WHOBREY		
CHECKED BY	M. MAUNG		
DESIGN OVERSIGHT	BEHZAD GOLEMOHAMMADI		

STATE OF CALIFORNIA - DEPARTMENT OF TRANSPORTATION
Caltrans
ELECTRICAL

LAST REVISION 00-00-00
DATE PLOTTED => 09-NOV-2005
TIME PLOTTED => 15:11

RELATIVE BORDER SCALE IS IN MILLIMETERS 0 20 40 60 80

USERNAME => lGraham
DGN FILE => 41123uza107.dgn

CU 04240

EA 1123U1

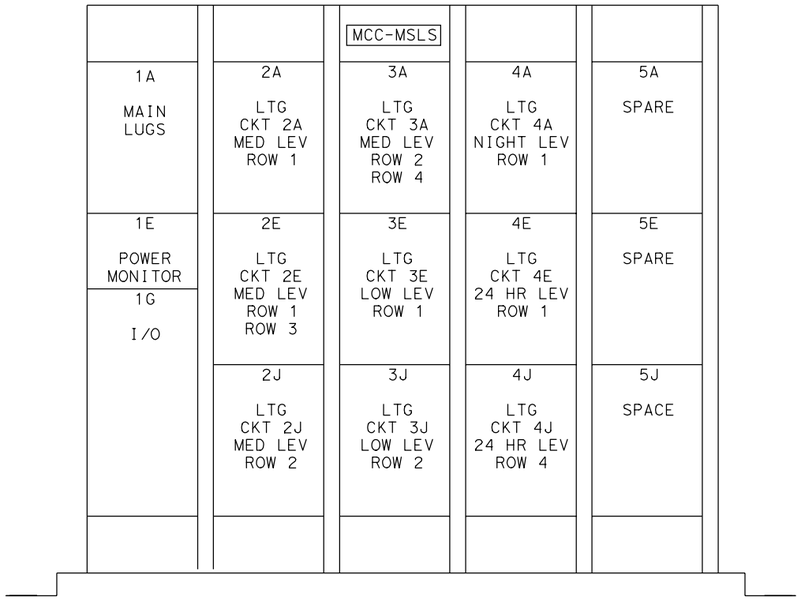

(A) MCC - MSLS STAND-BY LIGHTING ELEVATION

NO SCALE

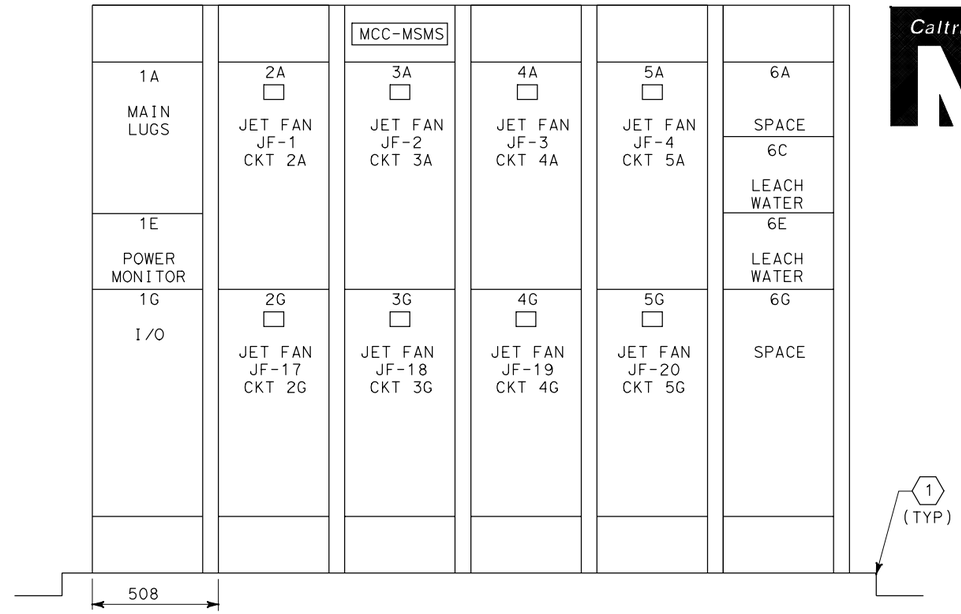

(B) MCC - MSMS JET FANS ELEVATION

NO SCALE

DIST	COUNTY	ROUTE	KILOMETER POST TOTAL PROJECT	SHEET No	TOTAL SHEETS
04	SM	1			

Min Maung 9/30/05
REGISTERED ELECTRICAL ENGINEER

PLANS APPROVAL DATE

REGISTERED PROFESSIONAL ENGINEER — MIN MAUNG — No. E012210 — Exp. 09/30/06 — ELECT — STATE OF CALIFORNIA

The State of California or its officers or agents shall not be responsible for the accuracy or completeness of electronic copies of this plan sheet.

HNTB *Corporation*
200 E. SANDPOINTE AVENUE, SUITE 200
SANTA ANA, CALIFORNIA 92707

Caltrans now has a web site! To get to the web site, go to: http://www.dot.ca.gov

SHEET NOTES:

(1) ALL FLOOR MOUNTED EQUIPMENT TO BE SET ON 102mm THICK EQUIPMENT PADS.

DIMENSION TABLE - BASIS OF DESIGN

EQPT	HEIGHT	WIDTH	DEPTH
MCC	2286	508/CUB.	407
ATS	2295	2200	1940
XFMR	2295	2500	1700
SWBD/ MAIN CB/ MULTIMETER	2295	2286	1371
TRANSITION	2295	660	1371
PG&E SERVICE	2413	2180	2440

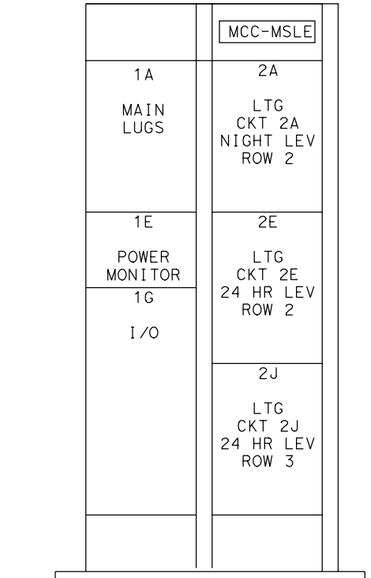

(C) MCC - MSLE EMERGENCY LIGHTING ELEVATION

NO SCALE

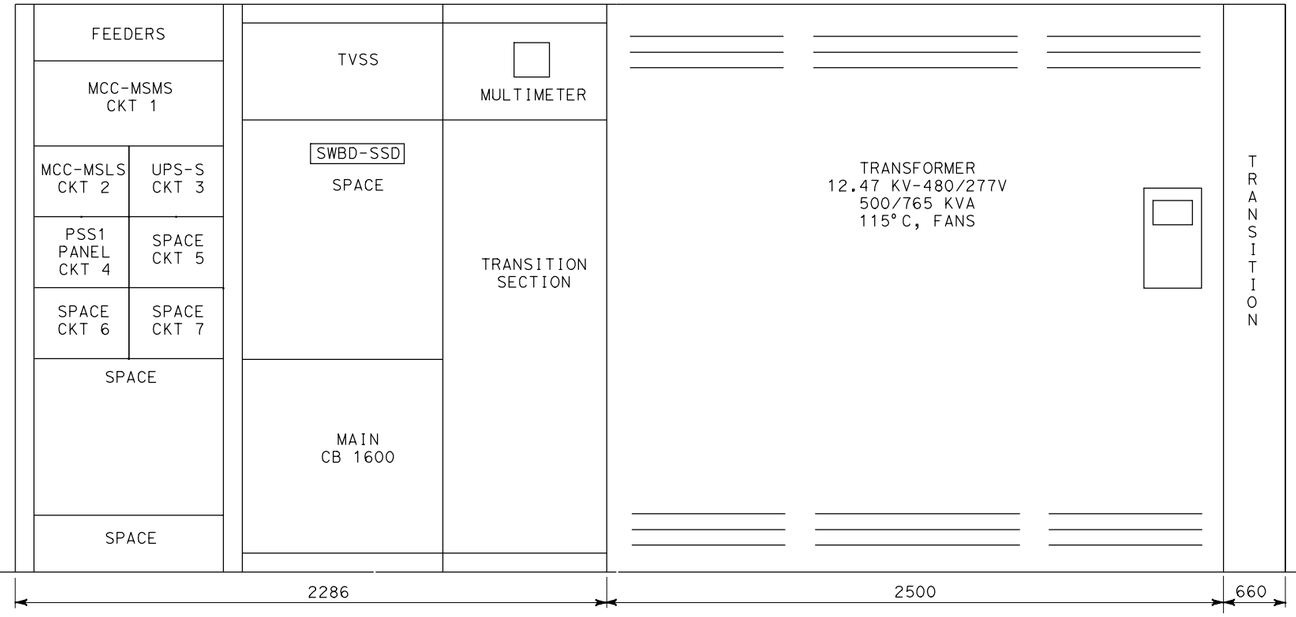

(D) SOUTH SUBSTATION ELEVATION

NO SCALE

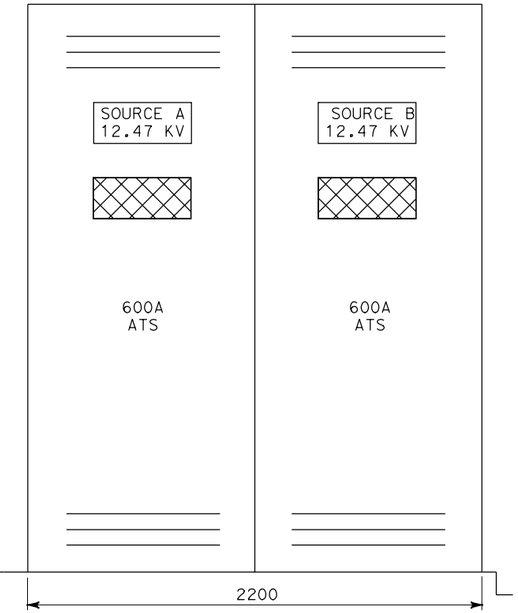

(E) ATS ELEVATION

NO SCALE

ALL DIMENSIONS ARE IN MILLIMETERS UNLESS OTHERWISE SHOWN

EQUIPMENT ELEVATIONS- SOUTH EQUIPMENT CHAMBER

SCALE AS SHOWN

PS&E SUBMITTAL (11/18/05)
NOT FOR CONSTRUCTION

E7.1

STATE OF CALIFORNIA - DEPARTMENT OF TRANSPORTATION
Caltrans
ELECTRICAL

DESIGN OVERSIGHT: BEHZAD GOLEMOHAMMADI
CALCULATED/DESIGNED BY: P. WHOBREY
CHECKED BY: M. MAUNG
DATE: 9/30/05
REVISED BY / DATE REVISED

LAST REVISION 00-00-00
DATE PLOTTED => 09-NOV-2005
TIME PLOTTED => 15:11

RELATIVE BORDER SCALE IS IN MILLIMETERS 0 20 40 60 80

USERNAME => lGraham
DGN FILE => 41123uza108.dgn

CU 04240
EA 1123U1

DIST	COUNTY	ROUTE	KILOMETER POST TOTAL PROJECT	SHEET No	TOTAL SHEETS
04	SM	1			

Min Maung 9/30/05
REGISTERED ELECTRICAL ENGINEER

PLANS APPROVAL DATE

REGISTERED PROFESSIONAL ENGINEER MIN MAUNG No. E012210 Exp. 09/30/06 ELECT STATE OF CALIFORNIA

The State of California or its officers or agents shall not be responsible for the accuracy or completeness of electronic copies of this plan sheet.

HNTB *Corporation*
200 E. SANDPOINTE AVENUE, SUITE 200
SANTA ANA, CALIFORNIA 92707

Caltrans now has a web site! To get to the web site, go to: http://www.dot.ca.gov

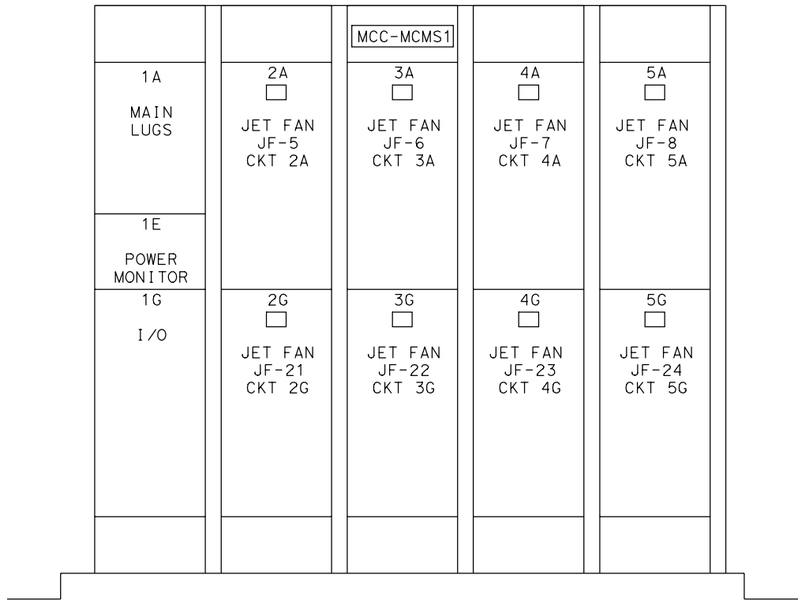

(A) MCC - MCMS1 JET FANS ELEVATION

NO SCALE

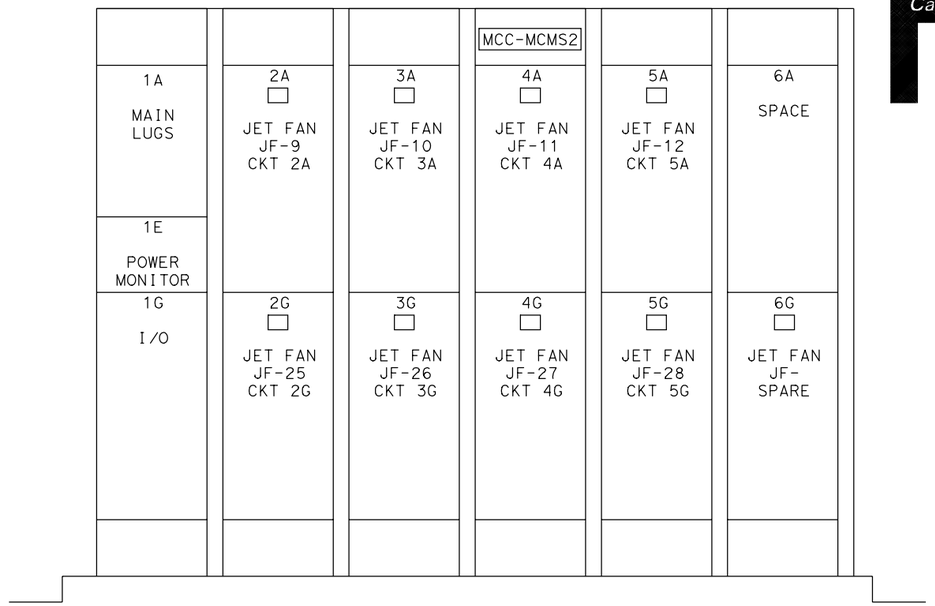

(B) MCC - MCMS2 JET FANS ELEVATION

NO SCALE

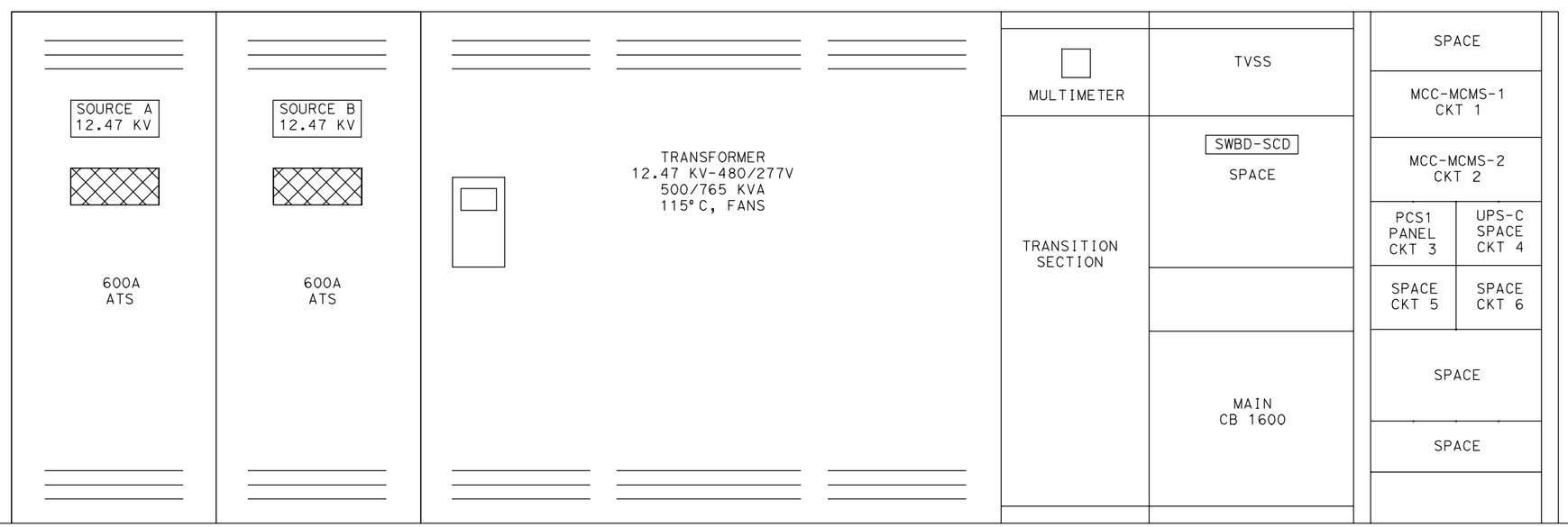

(C) CENTER SUBSTATION ELEVATION

NO SCALE

PS&E SUBMITTAL (11/18/05)
NOT FOR CONSTRUCTION

ALL DIMENSIONS ARE IN MILLIMETERS UNLESS OTHERWISE SHOWN

EQUIPMENT ELEVATIONS- CENTER EQUIPMENT CHAMBER

SCALE AS SHOWN

E7.2

STATE OF CALIFORNIA - DEPARTMENT OF TRANSPORTATION
Caltrans
ELECTRICAL

DESIGN OVERSIGHT: BEHZAD GOLEMOHAMMADI
CALCULATED/DESIGNED BY: P. WHOBREY
CHECKED BY: M. MAUNG
DATE REVISED BY: 9/30/05
DATE REVISED

LAST REVISION 00-00-00
DATE PLOTTED => 09-NOV-2005
TIME PLOTTED => 15:11

RELATIVE BORDER SCALE IS IN MILLIMETERS 0 20 40 60 80

USERNAME => lGraham
DGN FILE => 41123uza109.dgn

CU 04240
EA 1123U1

DIST	COUNTY	ROUTE	KILOMETER POST TOTAL PROJECT	SHEET No	TOTAL SHEETS
04	SM	1			

Min Maung 9/30/05
REGISTERED ELECTRICAL ENGINEER

PLANS APPROVAL DATE

REGISTERED PROFESSIONAL ENGINEER MIN MAUNG No. E012210 Exp. 09/30/06 ELECT STATE OF CALIFORNIA

The State of California or its officers or agents shall not be responsible for the accuracy or completeness of electronic copies of this plan sheet.

HNTB *Corporation*
200 E. SANDPOINTE AVENUE, SUITE 200
SANTA ANA, CALIFORNIA 92707

Caltrans now has a web site! To get to the web site, go to: http://www.dot.ca.gov

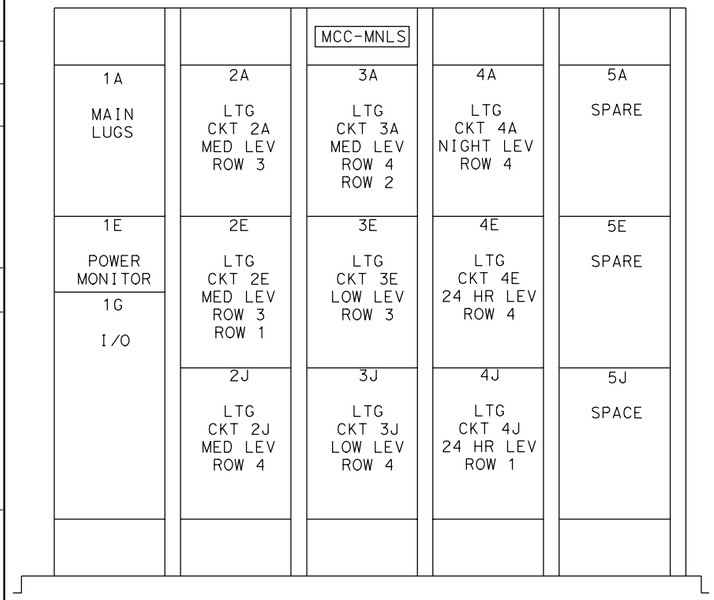

(D) MCC - MNLS STAND-BY LIGHTING ELEVATION

NO SCALE

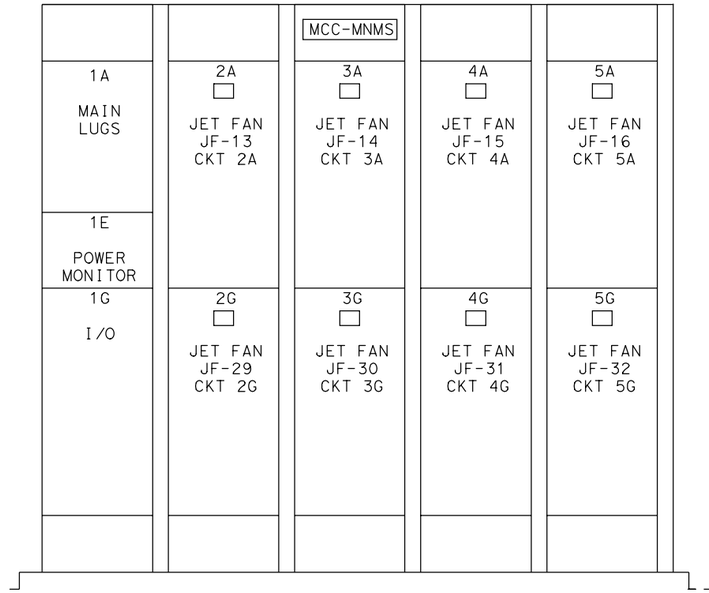

(B) MCC - MNMS JET FANS ELEVATION

NO SCALE

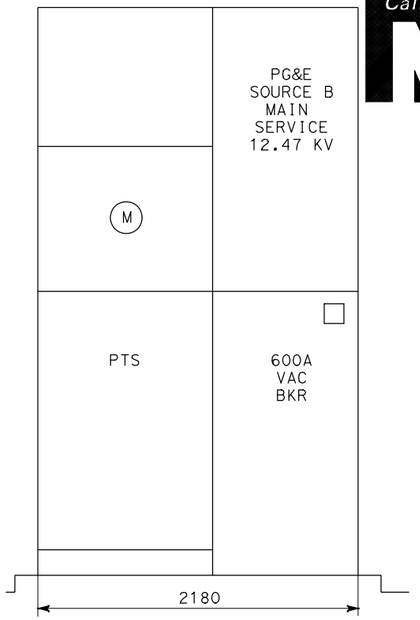

(C) PG&E SERVICE

NO SCALE

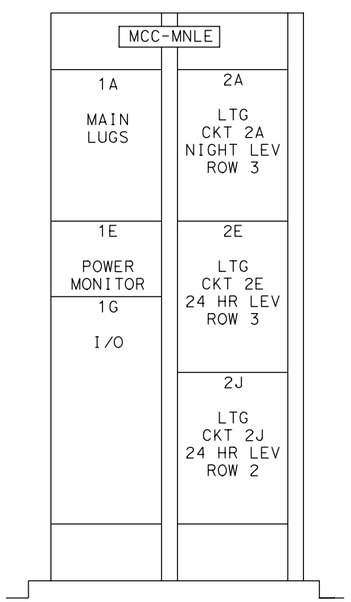

(A) MCC - MNLE EMERGENCY LIGHTING ELEVATION

NO SCALE

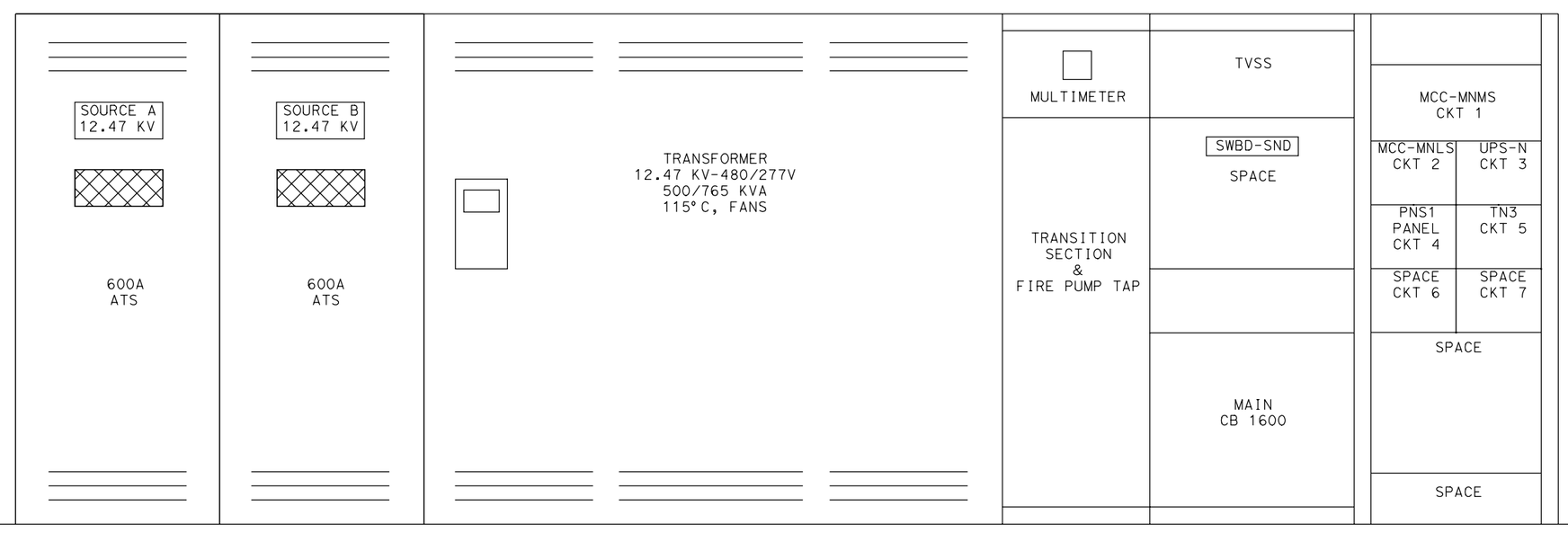

(E) NORTH SUBSTATION ELEVATION

NO SCALE

ALL DIMENSIONS ARE IN MILLIMETERS UNLESS OTHERWISE SHOWN

EQUIPMENT ELEVATIONS- NORTH EQUIPMENT CHAMBER

SCALE AS SHOWN

PS&E SUBMITTAL (11/18/05)
NOT FOR CONSTRUCTION

E7.3

STATE OF CALIFORNIA - DEPARTMENT OF TRANSPORTATION
Caltrans
ELECTRICAL

DESIGN OVERSIGHT: BEHZAD GOLEMOHAMMADI
CALCULATED/DESIGNED BY: P. WHOBREY
CHECKED BY: M. MAUNG
REVISED BY / DATE REVISED: 9/30/05

LAST REVISION 00-00-00
DATE PLOTTED => 09-NOV-2005
TIME PLOTTED => 15:11

RELATIVE BORDER SCALE IS IN MILLIMETERS 0 20 40 60 80
USERNAME => lGraham
DGN FILE => 41123uza110.dgn
CU 04240
EA 1123U1

DIST	COUNTY	ROUTE	KILOMETER POST TOTAL PROJECT	SHEET No	TOTAL SHEETS
04	SM	1			

Min Maung 9/30/05
REGISTERED ELECTRICAL ENGINEER

PLANS APPROVAL DATE

REGISTERED PROFESSIONAL ENGINEER
MIN MAUNG
No. E012210
Exp. 09/30/06
ELECT
STATE OF CALIFORNIA

The State of California or its officers or agents shall not be responsible for the accuracy or completeness of electronic copies of this plan sheet.

HNTB *Corporation*
200 E. SANDPOINTE AVENUE, SUITE 200
SANTA ANA, CALIFORNIA 92707

Caltrans now has a web site! To get to the web site, go to: http://www.dot.ca.gov

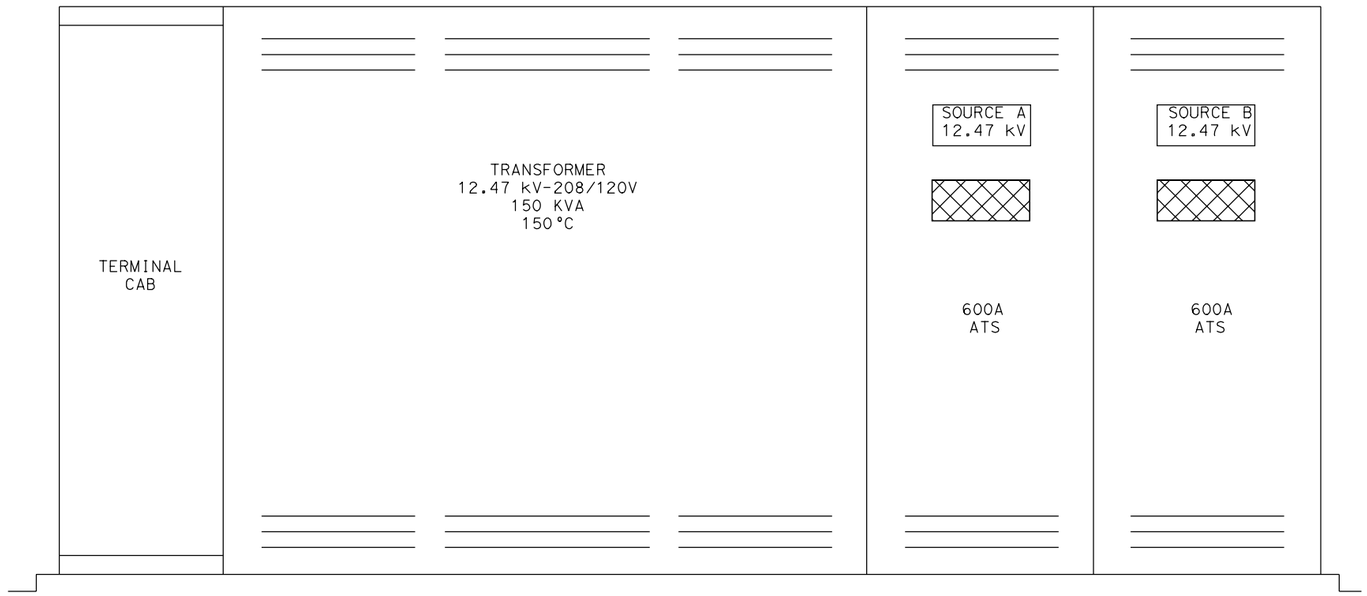

(A) OMC SUBSTATION ELEVATION

NO SCALE

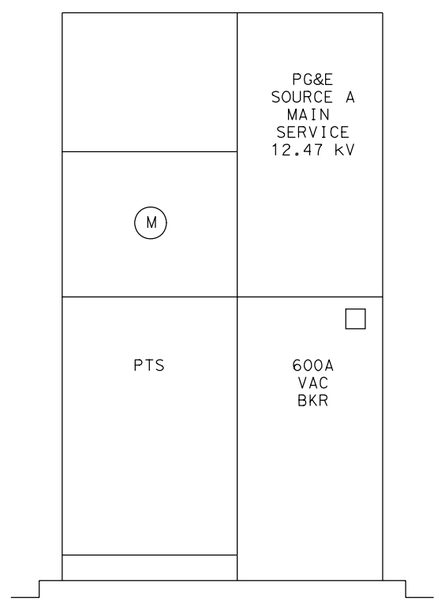

(B) PG&E SERVICE

NO SCALE

PS&E SUBMITTAL (11/18/05)
NOT FOR CONSTRUCTION

ALL DIMENSIONS ARE IN MILLIMETERS UNLESS OTHERWISE SHOWN

EQUIPMENT ELEVATIONS-OMC BUILDING

SCALE AS SHOWN

E7.4

STATE OF CALIFORNIA - DEPARTMENT OF TRANSPORTATION
Caltrans
ELECTRICAL

DESIGN OVERSIGHT: BEHZAD GOLEMOHAMMADI

CALCULATED/DESIGNED BY: P. WHOBREY
CHECKED BY: M. MAUNG

REVISED BY	DATE	DATE REVISED
	9/30/05	

LAST REVISION 00-00-00
DATE PLOTTED => 09-NOV-2005
TIME PLOTTED => 15:11

RELATIVE BORDER SCALE IS IN MILLIMETERS 0 20 40 60 80

USERNAME => lGraham
DGN FILE => 41123uza111.dgn

CU 04240

EA 1123U1

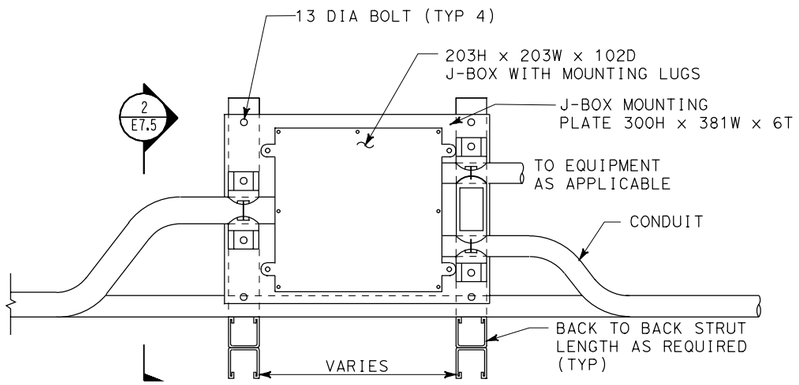

(B) TYPICAL J-BOX SUPPORT MOUNTED ON STRUT

NO SCALE. TYP FOR SIZE 203 x 203 x 102 JBOX.
SIMILAR INSTALLATION FOR OTHER J-BOX SIZES.

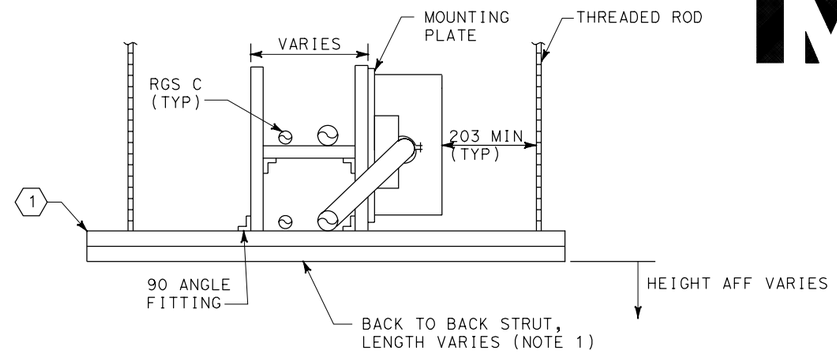

(2) TYPICAL J-BOX SUPPORT DETAIL

NO SCALE

NOTES:

(1) PROVIDE LATERAL AND LONGITUNDINAL BRACING TO STRUT SYSTEM.

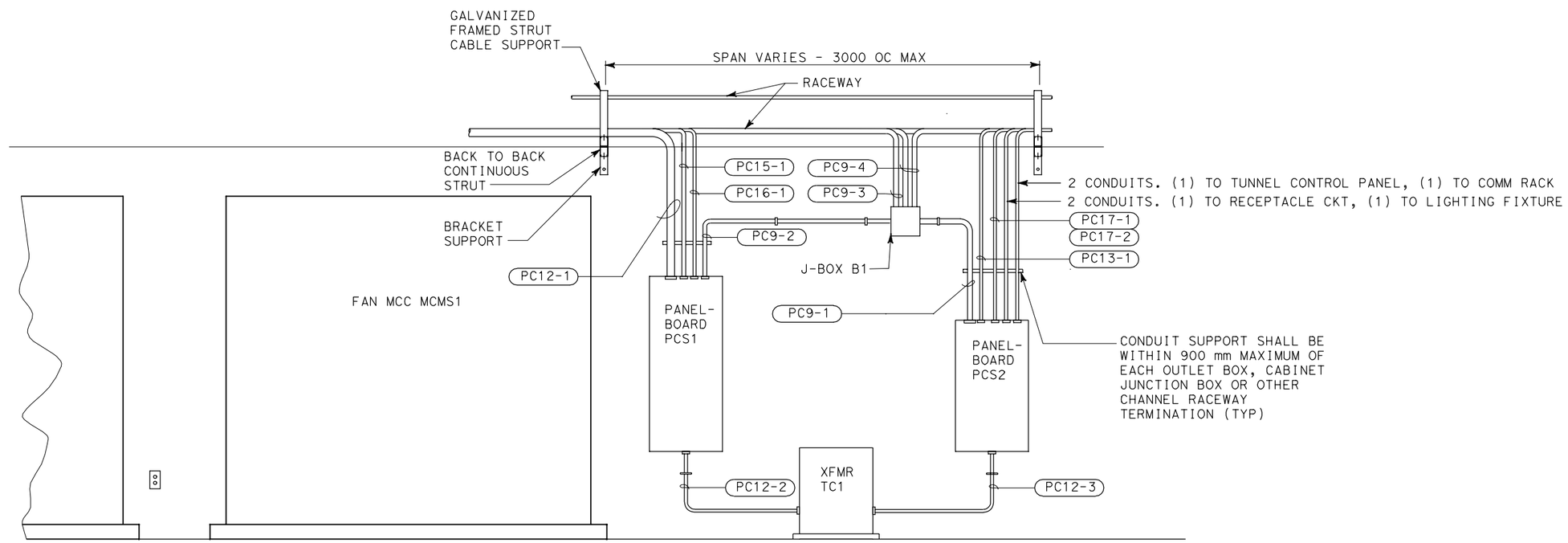

(A) PARTIAL EQUIPMENT ELEVATIONS - TYPICAL

NO SCALE. CENTER CHAMBER SHOWN. SOUTH CHAMBER AND NORTH CHAMBER SIMILAR

PS&E SUBMITTAL (11/18/05)
NOT FOR CONSTRUCTION

ALL DIMENSIONS ARE IN
MILLIMETERS UNLESS OTHERWISE SHOWN

EQUIPMENT ELEVATIONS-MISCELLANEOUS NO. 1

SCALE AS SHOWN

E7.5

DIST	COUNTY	ROUTE	KILOMETER POST TOTAL PROJECT	SHEET No	TOTAL SHEETS
04	SM	1			

Min Maung 9/30/05
REGISTERED ELECTRICAL ENGINEER

PLANS APPROVAL DATE

REGISTERED PROFESSIONAL ENGINEER
MIN MAUNG
No. E012210
Exp. 09/30/06
ELECT
STATE OF CALIFORNIA

The State of California or its officers or agents shall not be responsible for the accuracy or completeness of electronic copies of this plan sheet.

HNTB *Corporation*
200 E. SANDPOINTE AVENUE, SUITE 200
SANTA ANA, CALIFORNIA 92707

Caltrans now has a web site! To get to the web site, go to: http://www.dot.ca.gov

STATE OF CALIFORNIA - DEPARTMENT OF TRANSPORTATION
Caltrans
ELECTRICAL

DESIGN OVERSIGHT: BEHZAD GOLEMOHAMMADI

CALCULATED/DESIGNED BY: P. WHOBREY
CHECKED BY: M. MAUNG

REVISED BY	DATE	DATE REVISED
	9/30/05	

LAST REVISION 00-00-00
DATE PLOTTED => 09-NOV-2005
TIME PLOTTED => 15:11

RELATIVE BORDER SCALE IS IN MILLIMETERS 0 20 40 60 80

USERNAME => lGraham
DGN FILE => 41123uza112.dgn

CU 04240

EA 1123U1

DIST	COUNTY	ROUTE	KILOMETER POST TOTAL PROJECT	SHEET No	TOTAL SHEETS
04	SM	1			

Min Maung 9/30/05
REGISTERED ELECTRICAL ENGINEER

REGISTERED PROFESSIONAL ENGINEER
MIN MAUNG
No. E012210
Exp. 09/30/06
ELECT
STATE OF CALIFORNIA

PLANS APPROVAL DATE

The State of California or its officers or agents shall not be responsible for the accuracy or completeness of electronic copies of this plan sheet.

HNTB *Corporation*
200 E. SANDPOINTE AVENUE, SUITE 200
SANTA ANA, CALIFORNIA 92707

Caltrans now has a web site! To get to the web site, go to: http://www.dot.ca.gov

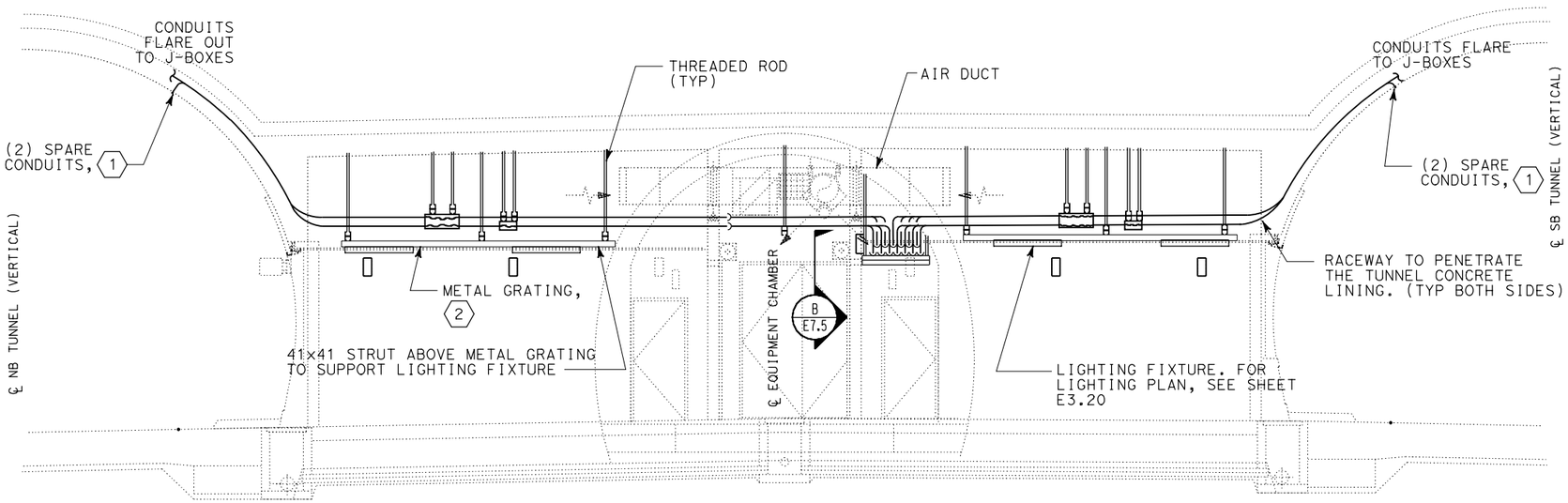

SHEET NOTES:

1. SPARE CONDUITS STUB OUT 254 ABOVE JET FAN CONDUIT. USE FLUSHED COUPLER WITH END PLUG.
2. METAL GRATING PROVIDED WITH HOLE TO ACCOMMODATE LIGHTING FIXTURE. COORDINATE THE LOCATION OF LIGHTING FIXTURES WITH THE ARCHITECTURAL.

A CROSS-PASSAGE FOR EMERGENCY VEHICLE ELEVATIONS

PS&E SUBMITTAL (11/18/05)
NOT FOR CONSTRUCTION

ALL DIMENSIONS ARE IN MILLIMETERS UNLESS OTHERWISE SHOWN

EQUIPMENT ELEVATIONS-MISCELLANEOUS NO. 2

NO SCALE

E7.6

	REVISED BY	DATE	DATE REVISED

CALCULATED/DESIGNED BY: P. WHOBREY
CHECKED BY: M. MAUNG
DESIGN OVERSIGHT: BEHZAD GOLEMOHAMMADI

STATE OF CALIFORNIA - DEPARTMENT OF TRANSPORTATION
Caltrans
ELECTRICAL

LAST REVISION 00-00-00
DATE PLOTTED => 09-NOV-2005
TIME PLOTTED => 15:11

RELATIVE BORDER SCALE IS IN MILLIMETERS 0 20 40 60 80
USERNAME => lGraham
DGN FILE => 41123uza113.dgn
CU 04240
EA 1123U1

DIST	COUNTY	ROUTE	KILOMETER POST TOTAL PROJECT	SHEET No	TOTAL SHEETS
04	SM	1			

Caltrans Metric

Min Maung 9/30/05
REGISTERED ELECTRICAL ENGINEER

PLANS APPROVAL DATE

REGISTERED PROFESSIONAL ENGINEER MIN MAUNG No. E012210 Exp. 09/30/06 ELECT STATE OF CALIFORNIA

The State of California or its officers or agents shall not be responsible for the accuracy or completeness of electronic copies of this plan sheet.

HNTB *Corporation*
200 E. SANDPOINTE AVENUE, SUITE 200
SANTA ANA, CALIFORNIA 92707

Caltrans now has a web site! To get to the web site, go to: http://www.dot.ca.gov

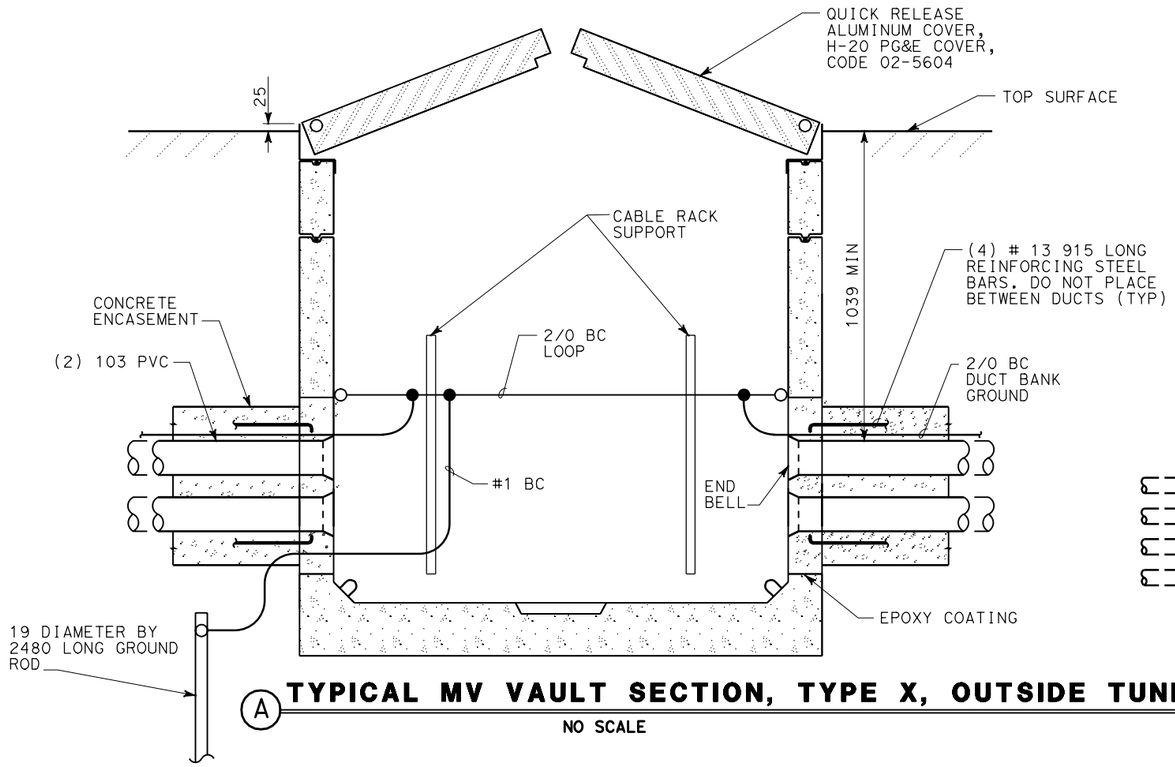

(A) TYPICAL MV VAULT SECTION, TYPE X, OUTSIDE TUNNEL

NO SCALE

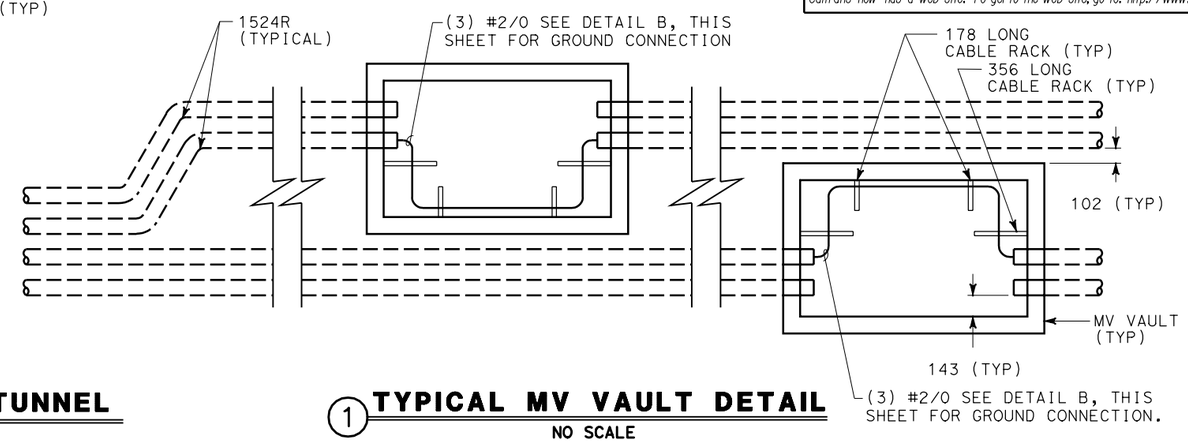

(1) TYPICAL MV VAULT DETAIL

NO SCALE

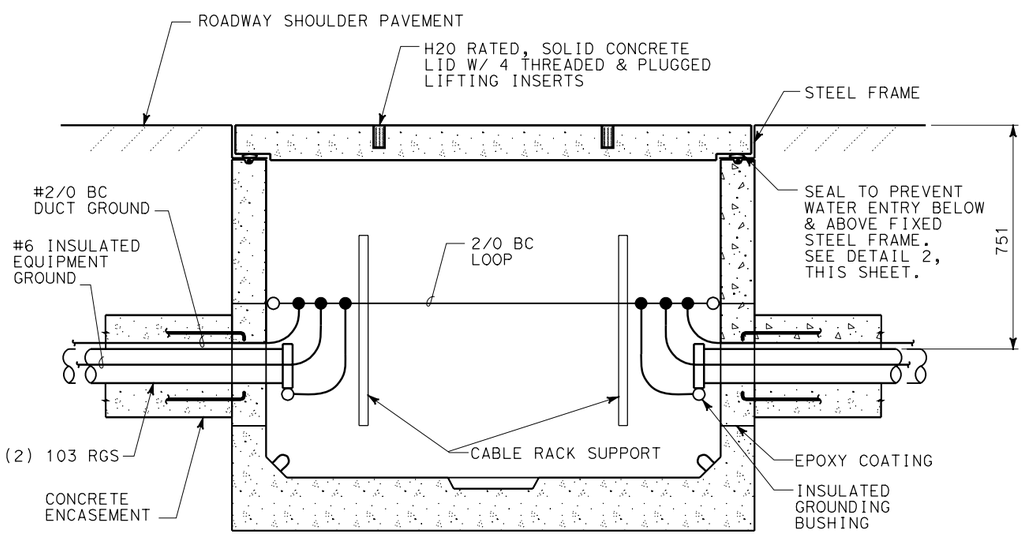

(B) TYPICAL MV VAULT SECTION, TYPE Y, INSIDE TUNNEL

NO SCALE

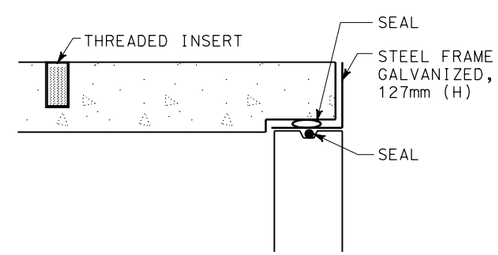

(2) TYPE Y, MV VAULT SEALED COVER

NO SCALE

NOTE:

CAST-IN-PLACE CABLE RACK SUPPORTS MAY BE USED IN LIEU OF SURFACE MOUNTED SUPPORTS.

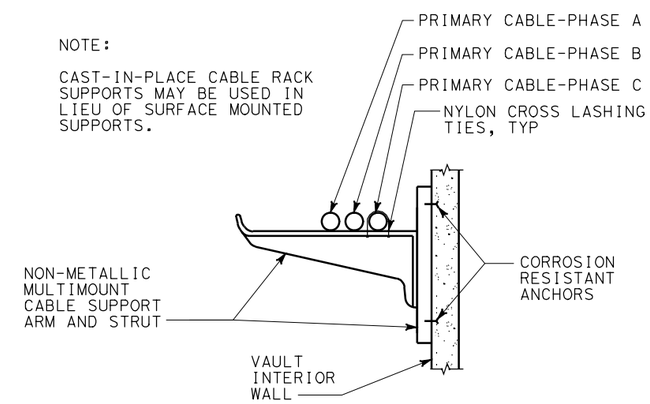

(3) CABLE SUPPORT RACK DETAIL

NO SCALE

ALL DIMENSIONS ARE IN MILLIMETERS UNLESS OTHERWISE SHOWN

MEDIUM VOLTAGE UTILITY DETAILS NO. 1

SCALE AS SHOWN

E8.1

PS&E SUBMITTAL (11/18/05)
NOT FOR CONSTRUCTION

	DATE	REVISED BY	DATE REVISED
CALCULATED/DESIGNED BY	P. WHOBREY		
CHECKED BY	M. MAUNG	9/30/05	

DESIGN OVERSIGHT: BEHZAD GOLEMOHAMMADI

STATE OF CALIFORNIA - DEPARTMENT OF TRANSPORTATION
Caltrans
ELECTRICAL

LAST REVISION 00-00-00
DATE PLOTTED => 09-NOV-2005
TIME PLOTTED => 15:11

RELATIVE BORDER SCALE IS IN MILLIMETERS 0 20 40 60 80

USERNAME => lGraham
DGN FILE => 41123uza114.dgn

CU 04240
EA 1123U1

DIST	COUNTY	ROUTE	KILOMETER POST TOTAL PROJECT	SHEET No	TOTAL SHEETS
04	SM	1			

Min Maung 9/30/05
REGISTERED ELECTRICAL ENGINEER

PLANS APPROVAL DATE

REGISTERED PROFESSIONAL ENGINEER MIN MAUNG No. E012210 Exp. 09/30/06 ELECT STATE OF CALIFORNIA

The State of California or its officers or agents shall not be responsible for the accuracy or completeness of electronic copies of this plan sheet.

HNTB *Corporation*
200 E. SANDPOINTE AVENUE, SUITE 200
SANTA ANA, CALIFORNIA 92707

Caltrans now has a web site! To get to the web site, go to: http://www.dot.ca.gov

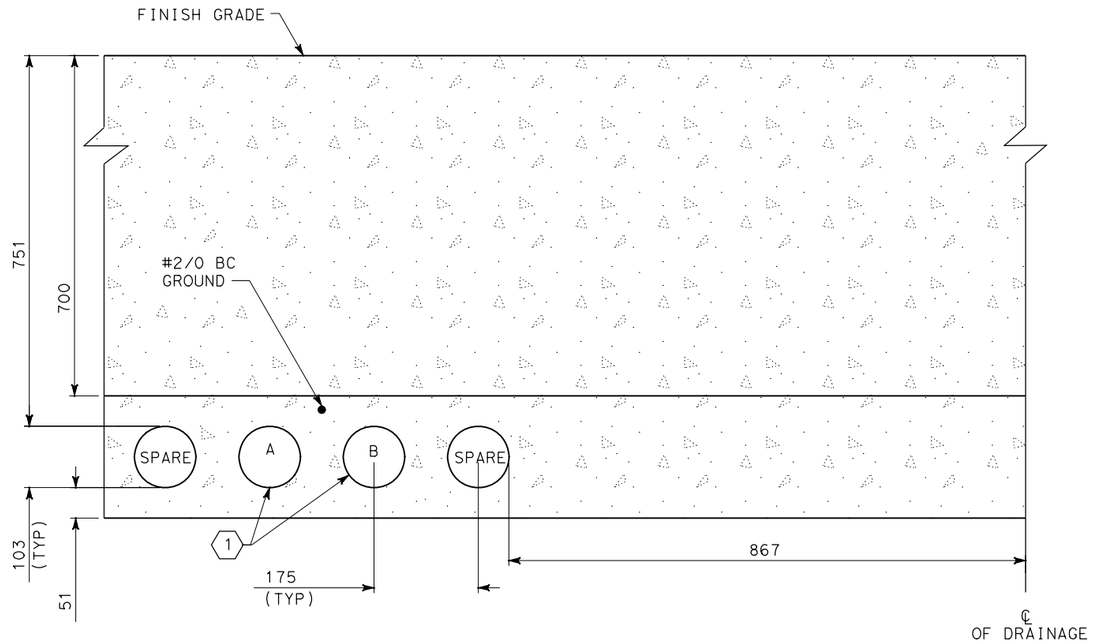

(A) SECTION-MV DUCT BANK, TWO SOURCES

NO SCALE

SHEET NOTE:

(1) 103 RGS, (3) #2/0, 15 KV AND 1 #6 GROUND.

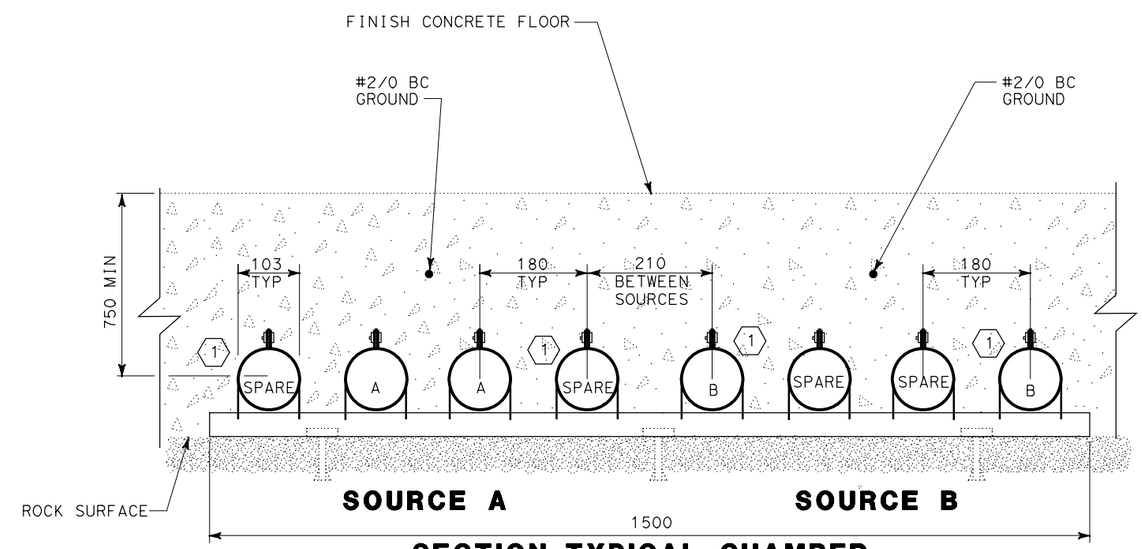

(C) SECTION-TYPICAL CHAMBER MV BURIED DUCT, TWO SOURCES

NO SCALE

(B) NOT USED

NO SCALE

PS&E SUBMITTAL (11/18/05)
NOT FOR CONSTRUCTION

ALL DIMENSIONS ARE IN MILLIMETERS UNLESS OTHERWISE SHOWN

MEDIUM VOLTAGE UTILITY DETAILS NO. 2

SCALE AS SHOWN

E8.2

	DATE	REVISED BY	DATE REVISED
CALCULATED/DESIGNED BY	P. WHOBREY		
CHECKED BY	M. MAUNG	9/30/05	

DESIGN OVERSIGHT: BEHZAD GOLEMOHAMMADI

STATE OF CALIFORNIA - DEPARTMENT OF TRANSPORTATION
Caltrans
ELECTRICAL

LAST REVISION 00-00-00
DATE PLOTTED => 09-NOV-2005
TIME PLOTTED => 15:11

RELATIVE BORDER SCALE IS IN MILLIMETERS 0 20 40 60 80

USERNAME => lGraham
DGN FILE => 41123uza115.dgn

CU 04240

EA 1123U1

DIST	COUNTY	ROUTE	KILOMETER POST TOTAL PROJECT	SHEET No	TOTAL SHEETS
04	SM	1			

Min Maung 9/30/05
REGISTERED ELECTRICAL ENGINEER

PLANS APPROVAL DATE

REGISTERED PROFESSIONAL ENGINEER MIN MAUNG No. E012210 Exp. 09/30/06 ELECT STATE OF CALIFORNIA

The State of California or its officers or agents shall not be responsible for the accuracy or completeness of electronic copies of this plan sheet.

HNTB *Corporation*
200 E. SANDPOINTE AVENUE, SUITE 200
SANTA ANA, CALIFORNIA 92707

Caltrans now has a web site! To get to the web site, go to: http://www.dot.ca.gov

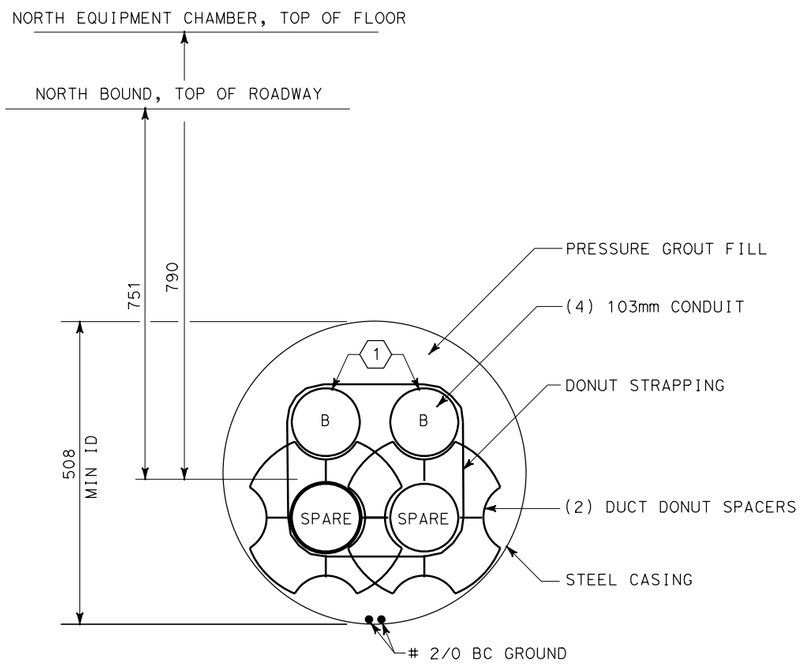

(A) SECTION - NORTH EQUIPMENT CHAMBER MV DUCT BORE INSTALLATION

NO SCALE

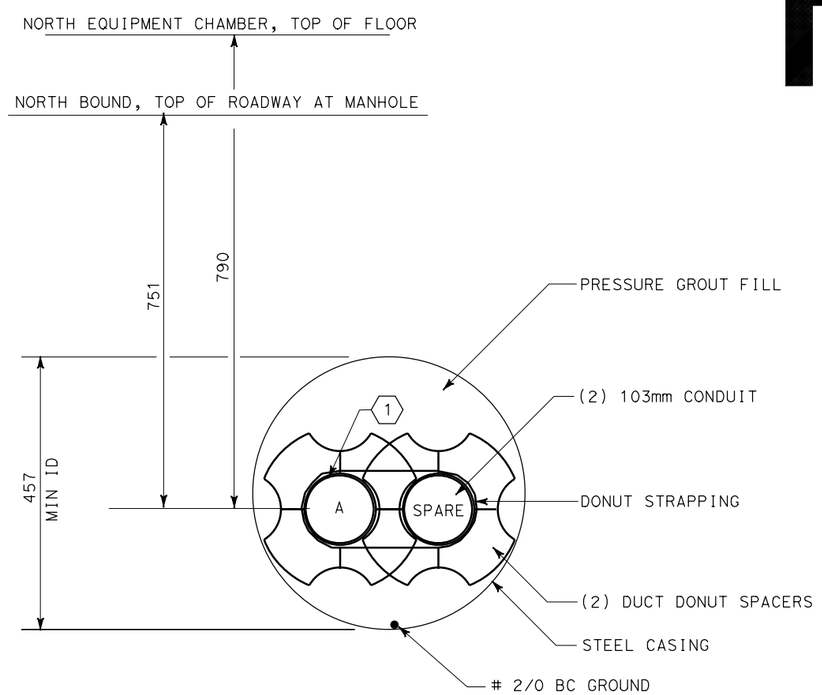

(B) SECTION - NORTH EQUIPMENT CHAMBER MV DUCT BORE INSTALLATION

NO SCALE

SHEET NOTES:

(1) CONDUIT CONTAINS (3) #2/0 15KV, 1#6 GND.

DUCT DONUT SPACERS, MANUFACTURER:
UNDERGROUND DEVICES,
MINIMUM 40 SEPARATION BETWEEN DUCTS

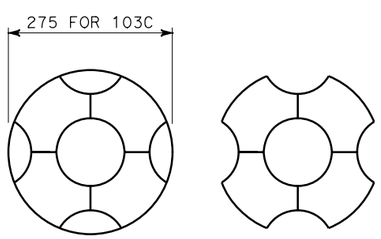

(C) TYPICAL DUCT DONUTS

NO SCALE

PS&E SUBMITTAL (11/18/05)
NOT FOR CONSTRUCTION

ALL DIMENSIONS ARE IN MILLIMETERS UNLESS OTHERWISE SHOWN

MEDIUM VOLTAGE UTILITY DETAILS NO. 3

SCALE AS SHOWN

E8.3

STATE OF CALIFORNIA - DEPARTMENT OF TRANSPORTATION
Caltrans ELECTRICAL

DESIGN OVERSIGHT: BEHZAD GOLEMOHAMMADI
CALCULATED/DESIGNED BY: P. WHOBREY
CHECKED BY: M. MAUNG
DATE: 9/30/05
REVISED BY
DATE REVISED

LAST REVISION 00-00-00
DATE PLOTTED => 09-NOV-2005
TIME PLOTTED => 15:11

RELATIVE BORDER SCALE IS IN MILLIMETERS 0 20 40 60 80
USERNAME => lGraham
DGN FILE => 41123uza116.dgn
CU 04240
EA 1123U1

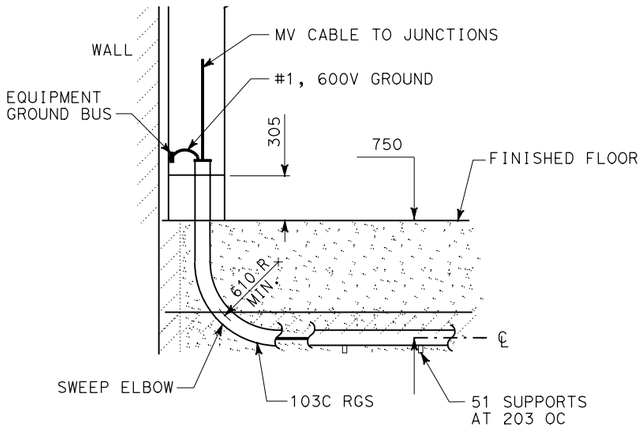

TYPICAL MV DUCT TERMINATION AT JUNCTION BOX

(A) 1:20

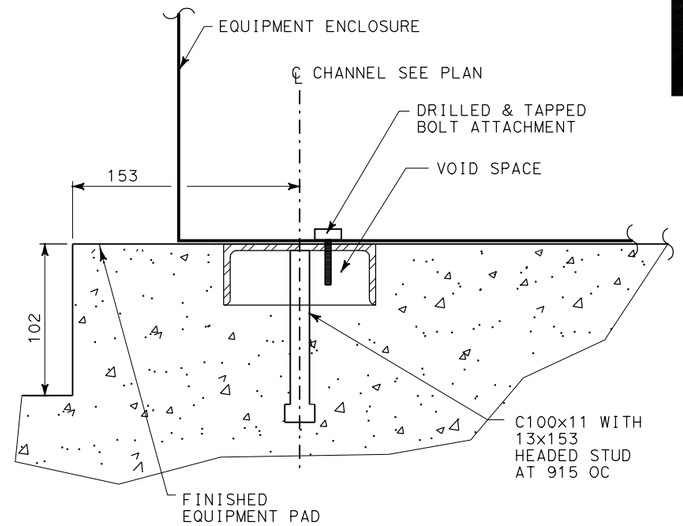

EQUIPMENT ANCHOR CHANNEL

(B) 1:2

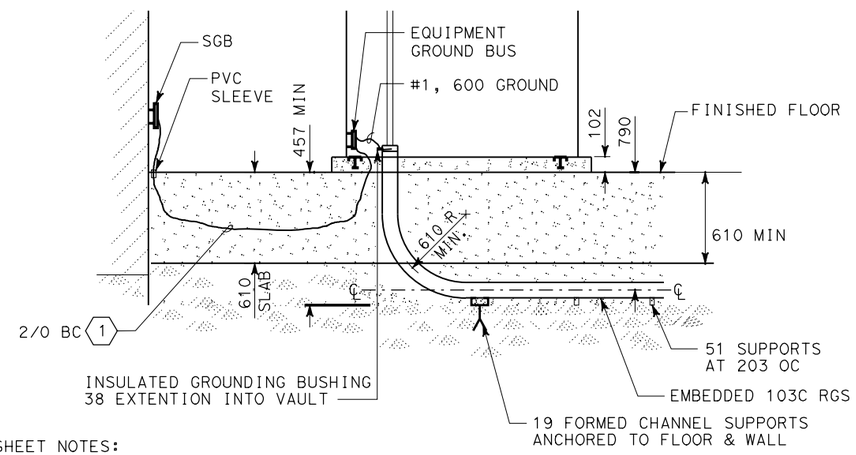

SHEET NOTES:

1. GROUND CONDUCTOR TO BE INSTALLED & SUPPORTED TO OUTSIDE OF RGS WITH MINIMUM 76 mm CONCRETE COVER TO SIDE OR BOTTOM OF TRENCH.

MV DUCT TERMINATION AT ATS-NORTH EQUIPMENT CHAMBER

(C) 1:20

DIST	COUNTY	ROUTE	KILOMETER POST TOTAL PROJECT	SHEET No	TOTAL SHEETS
04	SM	1			

Min Maung 9/30/05
REGISTERED ELECTRICAL ENGINEER

PLANS APPROVAL DATE

REGISTERED PROFESSIONAL ENGINEER MIN MAUNG No. E012210 Exp. 09/30/06 ELECT STATE OF CALIFORNIA

The State of California or its officers or agents shall not be responsible for the accuracy or completeness of electronic copies of this plan sheet.

HNTB *Corporation*
200 E. SANDPOINTE AVENUE, SUITE 200
SANTA ANA, CALIFORNIA 92707

Caltrans now has a web site! To get to the web site, go to: http://www.dot.ca.gov

DATE	REVISED BY	DATE REVISED
9/30/05		

CALCULATED/DESIGNED BY: P. WHOBREY
CHECKED BY: M. MAUNG

DESIGN OVERSIGHT: BEHZAD GOLEMOHAMMADI

STATE OF CALIFORNIA - DEPARTMENT OF TRANSPORTATION
Caltrans
ELECTRICAL

PS&E SUBMITTAL (11/18/05)
NOT FOR CONSTRUCTION

ALL DIMENSIONS ARE IN MILLIMETERS UNLESS OTHERWISE SHOWN

MEDIUM VOLTAGE UTILITY DETAILS NO. 4

SCALE AS SHOWN

E8.4

LAST REVISION 00-00-00
DATE PLOTTED => 09-NOV-2005
TIME PLOTTED => 15:11

RELATIVE BORDER SCALE IS IN MILLIMETERS 0 20 40 60 80

USERNAME => lGraham
DGN FILE => 41123uza117.dgn

CU 04240

EA 1123U1

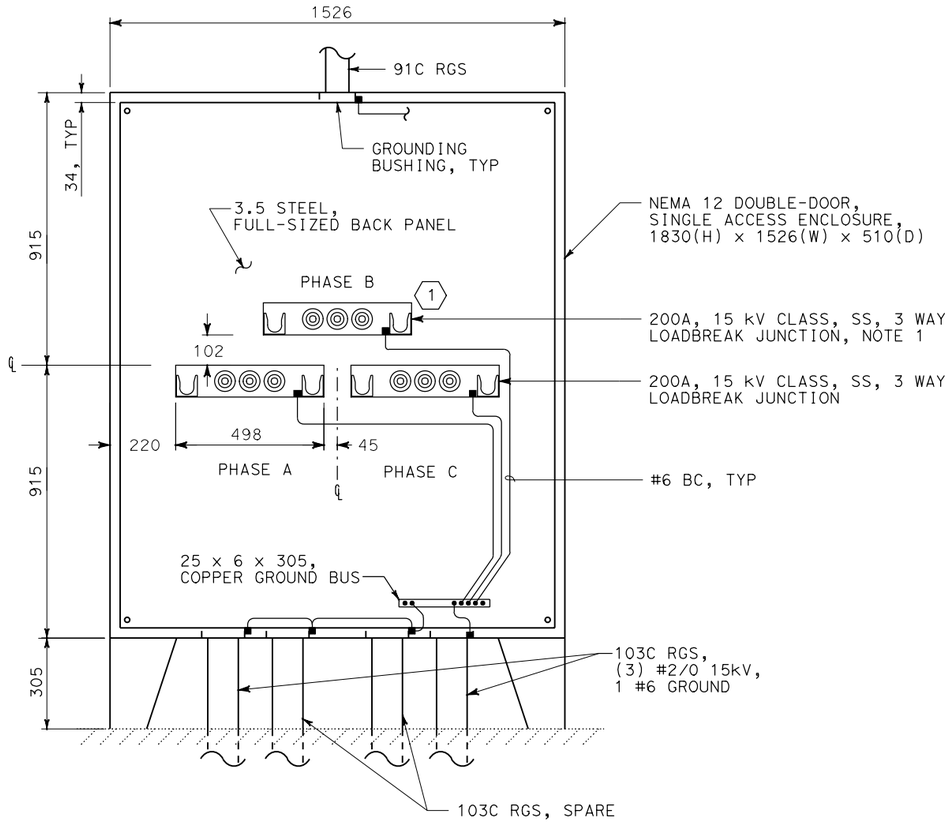

1 MV JUNCTION STAND, TYPICAL

1:10

SHEET NOTES:

1. "B" PHASE JUNCTION TO SET OUT 51 BEYOND "A" & "C" JUNCTIONS

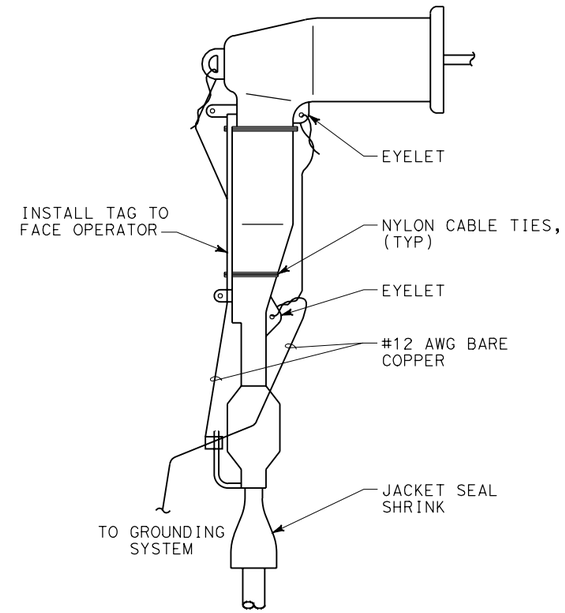

2 MV TERMINATION, TYPICAL

1:2

DIST	COUNTY	ROUTE	KILOMETER POST TOTAL PROJECT	SHEET No	TOTAL SHEETS
04	SM	1			

Min Maung 9/30/05
REGISTERED ELECTRICAL ENGINEER

PLANS APPROVAL DATE

REGISTERED PROFESSIONAL ENGINEER MIN MAUNG No. E012210 Exp. 09/30/06 ELECT STATE OF CALIFORNIA

The State of California or its officers or agents shall not be responsible for the accuracy or completeness of electronic copies of this plan sheet.

HNTB *Corporation*
200 E. SANDPOINTE AVENUE, SUITE 200
SANTA ANA, CALIFORNIA 92707

Caltrans now has a web site! To get to the web site, go to: http://www.dot.ca.gov

DATE	REVISED BY	DATE REVISED
9/30/05		

CALCULATED/DESIGNED BY: P. WHOBREY
CHECKED BY: M. MAUNG
DESIGN OVERSIGHT: BEHZAD GOLEMOHAMMADI

STATE OF CALIFORNIA - DEPARTMENT OF TRANSPORTATION
Caltrans ELECTRICAL

PS&E SUBMITTAL (11/18/05)
NOT FOR CONSTRUCTION

ALL DIMENSIONS ARE IN MILLIMETERS UNLESS OTHERWISE SHOWN

MEDIUM VOLTAGE UTILITY DETAILS NO. 5

SCALE AS SHOWN

E8.5

LAST REVISION 00-00-00
DATE PLOTTED => 09-NOV-2005
TIME PLOTTED => 15:11

RELATIVE BORDER SCALE IS IN MILLIMETERS 0 20 40 60 80

USERNAME => lGraham
DGN FILE => 41123uza118.dgn

CU 04240
EA 1123U1

DIST	COUNTY	ROUTE	KILOMETER POST TOTAL PROJECT	SHEET No	TOTAL SHEETS
04	SM	1			

Caltrans Metric

Min Maung 9/30/05
REGISTERED ELECTRICAL ENGINEER

PLANS APPROVAL DATE

REGISTERED PROFESSIONAL ENGINEER MIN MAUNG No. E012210 Exp. 09/30/06 ELECT STATE OF CALIFORNIA

The State of California or its officers or agents shall not be responsible for the accuracy or completeness of electronic copies of this plan sheet.

HNTB *Corporation*
200 E. SANDPOINTE AVENUE, SUITE 200
SANTA ANA, CALIFORNIA 92707

Caltrans now has a web site! To get to the web site, go to: http://www.dot.ca.gov

SHEET NOTES:

1. FOR LOCATION OF MECHANICAL PIPES, REFER TO MECHANICAL SHEET M7.11.

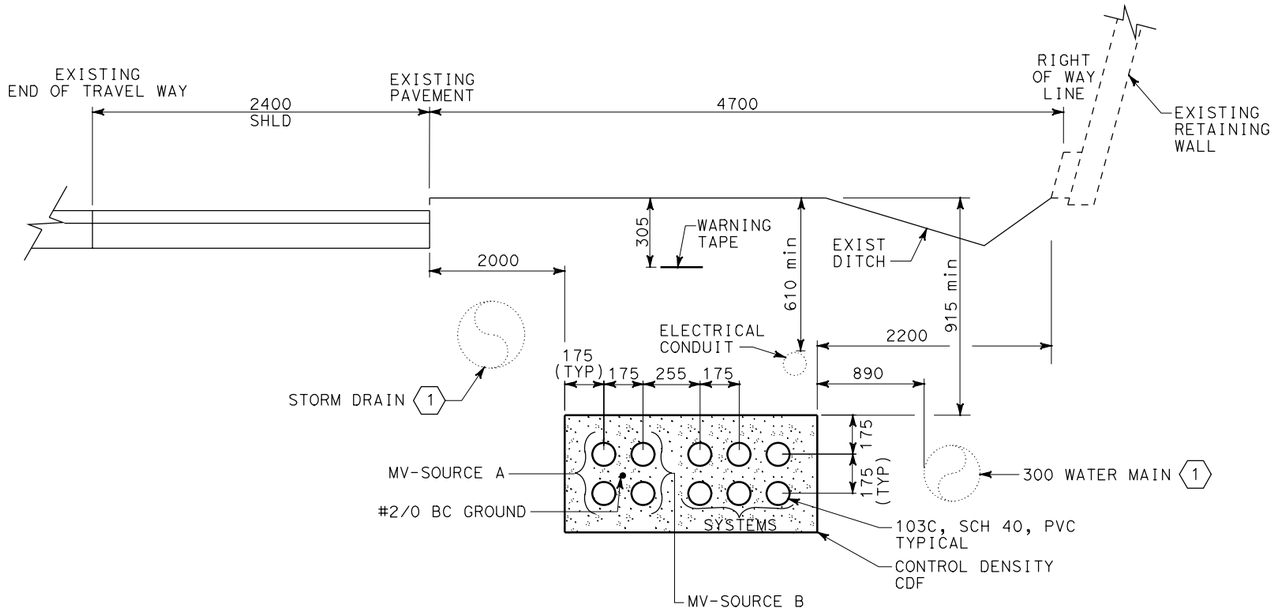

C TYPICAL SECTION - ROUTE 1

NO SCALE

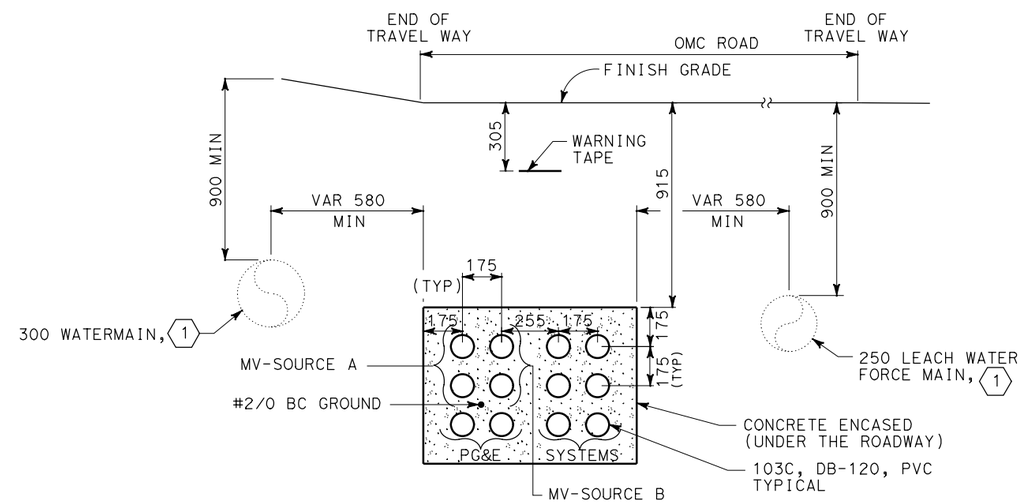

A TYPICAL SECTION - OMC ROAD

NO SCALE

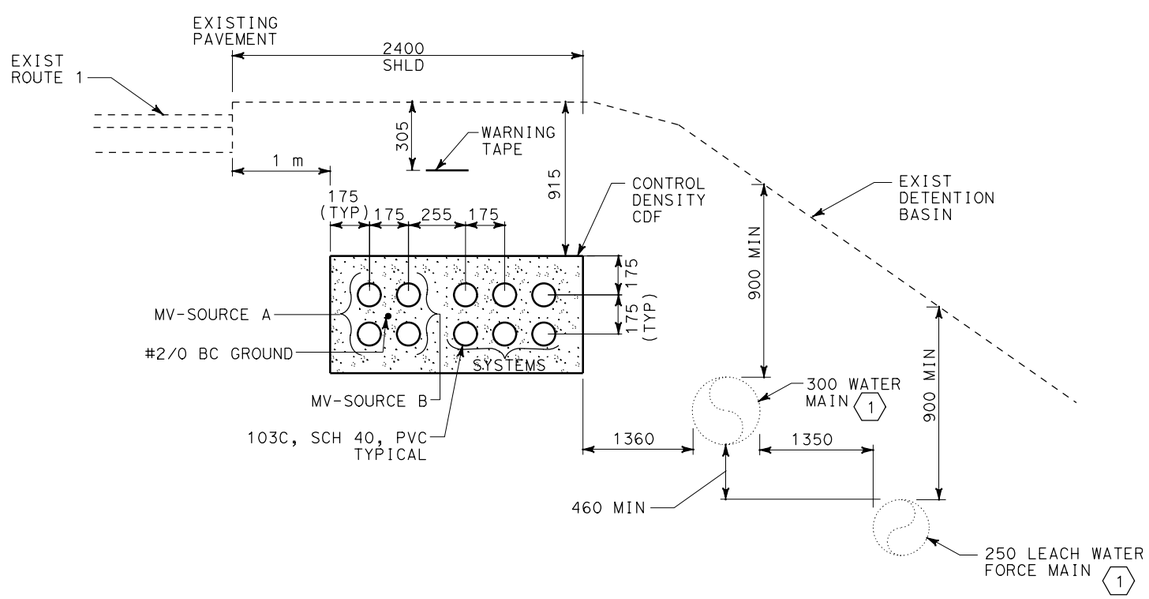

B TYPICAL SECTION - ROUTE 1

NO SCALE

PS&E SUBMITTAL (11/18/05)
NOT FOR CONSTRUCTION

ALL DIMENSIONS ARE IN MILLIMETERS UNLESS OTHERWISE SHOWN

MEDIUM VOLTAGE UTILITY DETAILS NO. 6

SCALE AS SHOWN

E8.6

DATE	REVISED BY	DATE REVISED
9/30/05		

CALCULATED/DESIGNED BY: P. WHOBREY
CHECKED BY: M. MAUNG
DESIGN OVERSIGHT: BEHZAD GOLEMOHAMMADI

STATE OF CALIFORNIA - DEPARTMENT OF TRANSPORTATION
Caltrans ELECTRICAL

LAST REVISION 00-00-00
DATE PLOTTED => 09-NOV-2005
TIME PLOTTED => 15:11

RELATIVE BORDER SCALE IS IN MILLIMETERS 0 20 40 60 80

USERNAME => lGraham
DGN FILE => 41123uza119.dgn

CU 04240

EA 1123U1

DIST	COUNTY	ROUTE	KILOMETER POST TOTAL PROJECT	SHEET No	TOTAL SHEETS
04	SM	1			

Min Maung 9/30/05
REGISTERED ELECTRICAL ENGINEER

PLANS APPROVAL DATE

REGISTERED PROFESSIONAL ENGINEER MIN MAUNG No. E012210 Exp. 09/30/06 ELECT STATE OF CALIFORNIA

The State of California or its officers or agents shall not be responsible for the accuracy or completeness of electronic copies of this plan sheet.

HNTB *Corporation*
200 E. SANDPOINTE AVENUE, SUITE 200
SANTA ANA, CALIFORNIA 92707

Caltrans now has a web site! To get to the web site, go to: http://www.dot.ca.gov

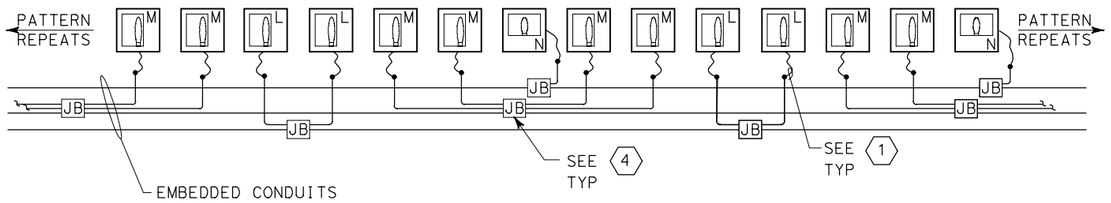

TYPICAL FIXTURE "TYPE GROUPING"/ J-BOX CONNECTION PATTERN FOR LIGHTING IN THRESHOLD ZONE

1

NO SCALE

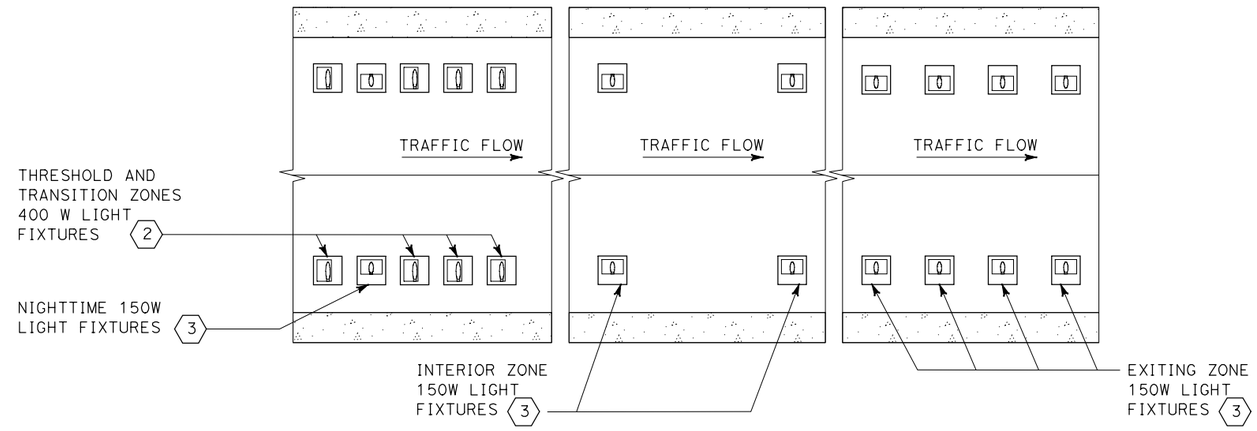

TUNNEL LIGHT FIXTURE MOUNTING ORIENTATION

3

NO SCALE

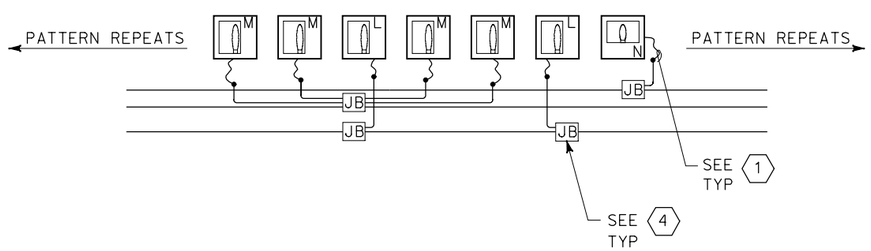

TYPICAL FIXTURE "TYPE GROUPING"/ J-BOX CONNECTION PATTERN FOR LIGHTING IN TRANSITION ZONE

2

NO SCALE

SHEET NOTES:

1. SEE FLEXIBLE METAL CONDUIT CONNECTION DETAILS ON SHEET E8.8.
2. THRESHOLD ZONE FIXTURES AND TRANSITION ZONE FIXTURES HAVE COUNTERBEAM LIGHT DISTRIBUTION TYPE.
3. NIGHTTIME, INTERIOR ZONE AND EXITING ZONE FIXTURES HAVE MC-IV DISTRIBUTION TYPE.
4. SEE DETAILS 1, 2 ON SHEET E8.11 FOR J-BOX CONNECTION DETAILS.
5. FIXTURE ORIENTATION AND BULB POSITION ARE SHOWN BASED ON GE PRODUCT. CONTRACTOR SHALL SUBMIT FINAL CONFIGURATION BASED ON THE PRODUCTS SELECTED.

PS&E SUBMITTAL (11/18/05)
NOT FOR CONSTRUCTION

ALL DIMENSIONS ARE IN MILLIMETERS UNLESS OTHERWISE SHOWN

LIGHTING DETAILS NO. 1

SCALE AS SHOWN

E8.7

DATE	REVISED BY	DATE REVISED
9/30/05		

CALCULATED/DESIGNED BY: A. GOROVAYA
CHECKED BY: M. MAUNG

DESIGN OVERSIGHT: BEHZAD GOLEMOHAMMADI

STATE OF CALIFORNIA - DEPARTMENT OF TRANSPORTATION
Caltrans
ELECTRICAL

LAST REVISION 00-00-00
DATE PLOTTED => 09-NOV-2005
TIME PLOTTED => 15:11

RELATIVE BORDER SCALE IS IN MILLIMETERS 0 20 40 60 80

USERNAME => lGraham
DGN FILE => 41123uza120.dgn

CU 04240
EA 1123U1

DIST	COUNTY	ROUTE	KILOMETER POST TOTAL PROJECT	SHEET No	TOTAL SHEETS
04	SM	1			

Min Maung 9/30/05
REGISTERED ELECTRICAL ENGINEER

PLANS APPROVAL DATE

REGISTERED PROFESSIONAL ENGINEER MIN MAUNG No. E012210 Exp. 09/30/06 ELECT STATE OF CALIFORNIA

The State of California or its officers or agents shall not be responsible for the accuracy or completeness of electronic copies of this plan sheet.

HNTB *Corporation*
200 E. SANDPOINTE AVENUE, SUITE 200
SANTA ANA, CALIFORNIA 92707

Caltrans now has a web site! To get to the web site, go to: http://www.dot.ca.gov

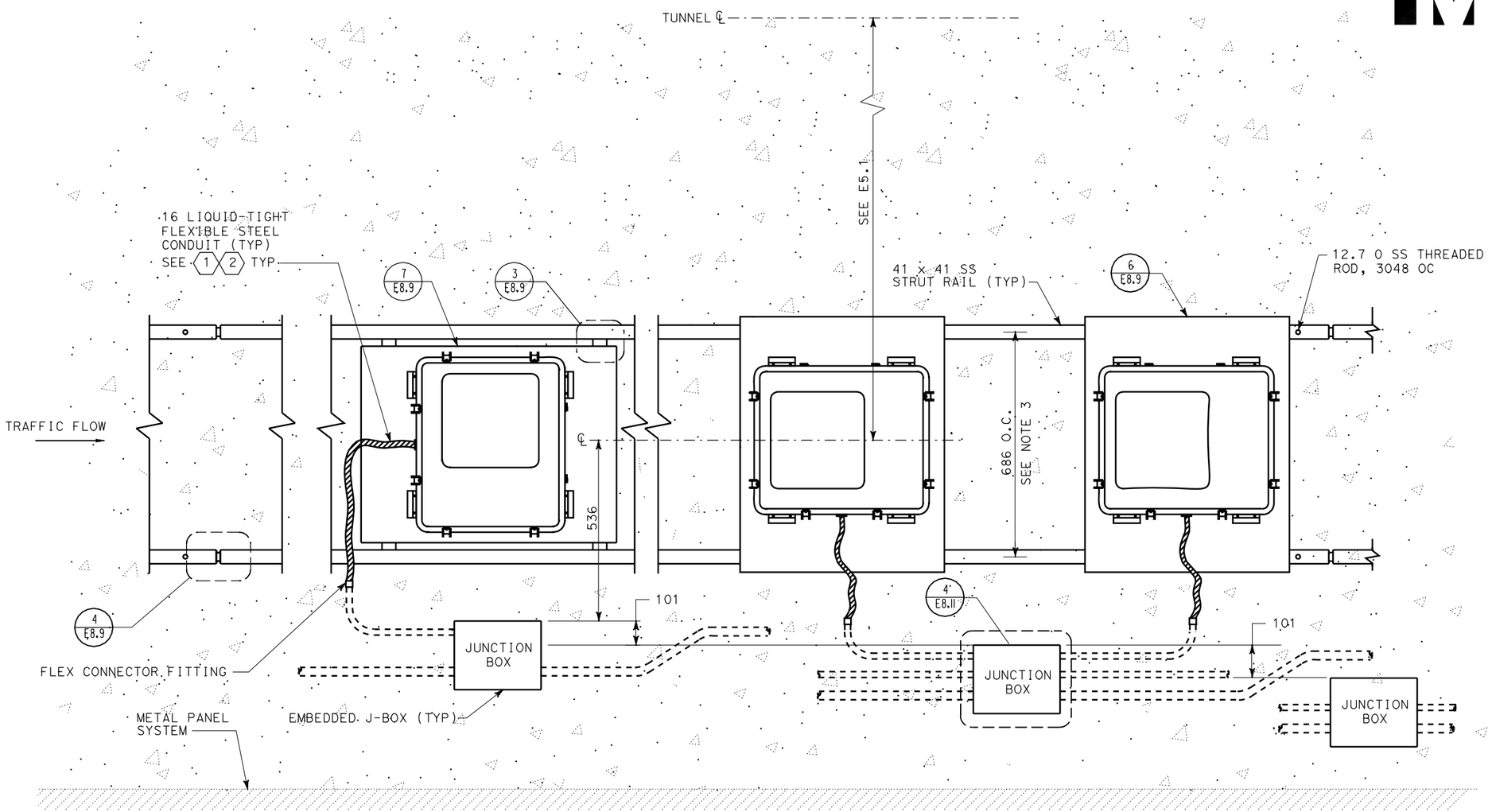

1 TYPICAL TUNNEL LUMINAIRE AND RACEWAY LAYOUT

SHEET NOTES:

1. LIQUID-TIGHT FLEXIBLE STEEL CONDUIT USED IN THE TUNNEL SHALL HAVE A JACKET MATERIAL WHICH HAS LIMITED SMOKE, LOW FLAME SPREAD, AND LOW TOXIC GAS EMISSIONS CHARACTERISTICS IN THE EVENT OF FIRE. SEE ELECTRICAL SPECIFICATIONS.
2. ½" C, 2#12, 1#12G

PS&E SUBMITTAL (11/18/05)
NOT FOR CONSTRUCTION

ALL DIMENSIONS ARE IN MILLIMETERS UNLESS OTHERWISE SHOWN

LIGHTING DETAILS NO. 2

NO SCALE

E8.8

CALCULATED/DESIGNED BY	A. GOROVAYA	REVISED BY	DATE
CHECKED BY	M. MAUNG	DATE REVISED	9/30/05
DESIGN OVERSIGHT	BEHZAD GOLEMOHAMMADI		

STATE OF CALIFORNIA - DEPARTMENT OF TRANSPORTATION
Caltrans
ELECTRICAL

LAST REVISION 00-00-00 | DATE PLOTTED => 09-NOV-2005 | TIME PLOTTED => 15:11

RELATIVE BORDER SCALE IS IN MILLIMETERS 0 20 40 60 80

USERNAME => lGraham
DGN FILE => 41123uza121.dgn

CU 04240 | EA 1123U1

DIST	COUNTY	ROUTE	KILOMETER POST TOTAL PROJECT	SHEET No	TOTAL SHEETS
04	SM	1			

Min Maung 9/30/05
REGISTERED ELECTRICAL ENGINEER

PLANS APPROVAL DATE

REGISTERED PROFESSIONAL ENGINEER MIN MAUNG No. E012210 Exp. 09/30/06 ELECT STATE OF CALIFORNIA

The State of California or its officers or agents shall not be responsible for the accuracy or completeness of electronic copies of this plan sheet.

HNTB *Corporation*
200 E. SANDPOINTE AVENUE, SUITE 200
SANTA ANA, CALIFORNIA 92707

Caltrans now has a web site! To get to the web site, go to: http://www.dot.ca.gov

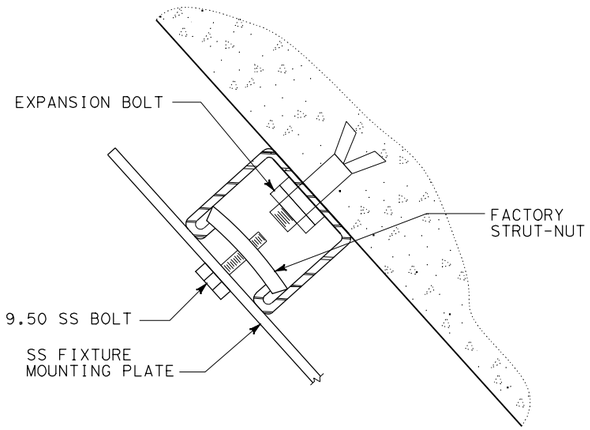

1 STRUT DETAIL
NO SCALE

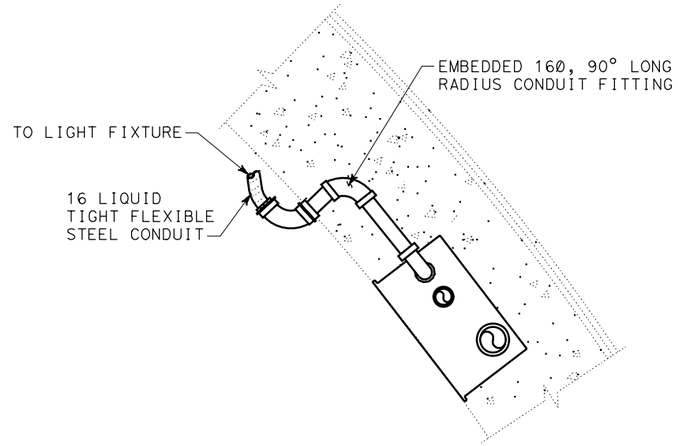

2 TYPICAL EMBEDDED LIGHTING J-BOX
NO SCALE

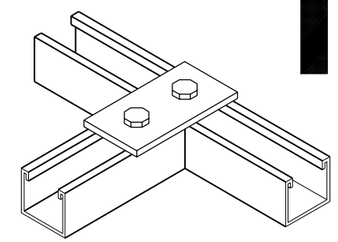

3 PLATE FITTING DETAIL
NO SCALE

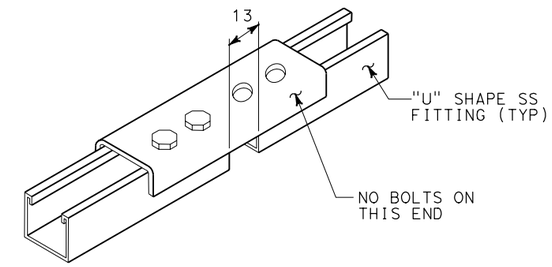

4 RAIL EXPANSION JOINT DETAIL
NO SCALE

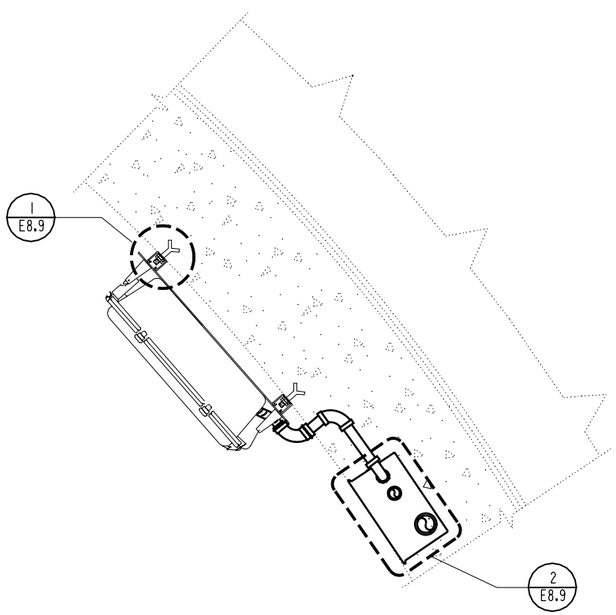

5 TUNNEL LIGHT FIXTURE
NO SCALE

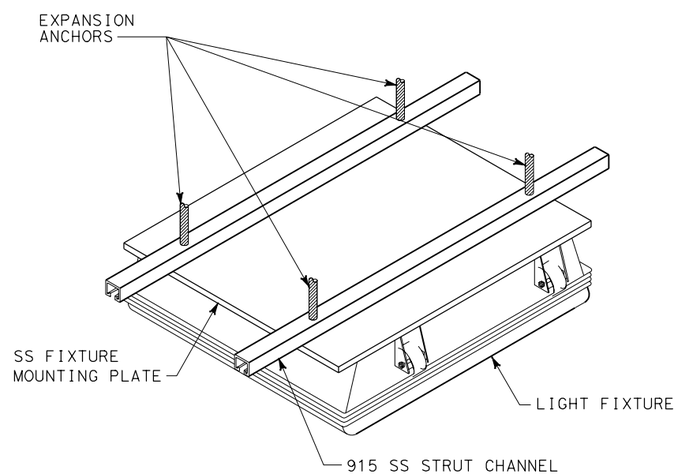

6 STRUT SUPPORT - ISOMETRIC
NO SCALE

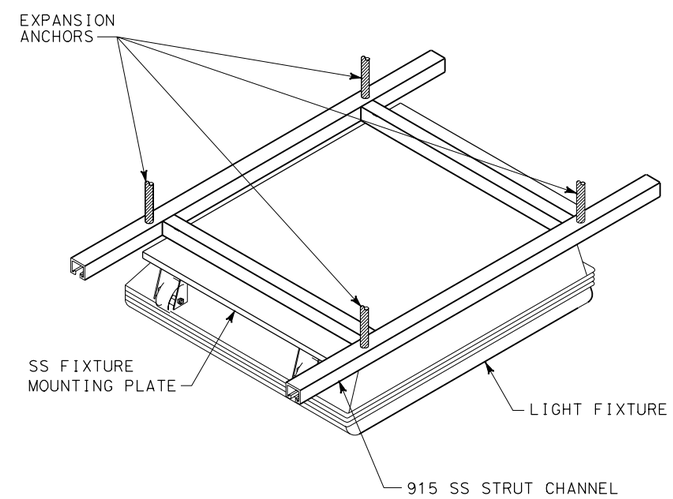

7 STRUT SUPPORT - ISOMETRIC
NO SCALE

ALL DIMENSIONS ARE IN MILLIMETERS UNLESS OTHERWISE SHOWN

LIGHTING DETAILS NO. 3

SCALE AS SHOWN

PS&E SUBMITTAL (11/18/05)
NOT FOR CONSTRUCTION

E8.9

	DATE	REVISED BY	DATE REVISED
CALCULATED/DESIGNED BY	A. GOROVAYA		
CHECKED BY	M. MAUNG		9/30/05

DESIGN OVERSIGHT: BEHZAD GOLEMOHAMMADI

STATE OF CALIFORNIA - DEPARTMENT OF TRANSPORTATION
Caltrans
ELECTRICAL

LAST REVISION 00-00-00
DATE PLOTTED => 09-NOV-2005
TIME PLOTTED => 15:11

RELATIVE BORDER SCALE IS IN MILLIMETERS 0 20 40 60 80

USERNAME => lGraham
DGN FILE => 41123uza122.dgn

CU 04240

EA 1123U1

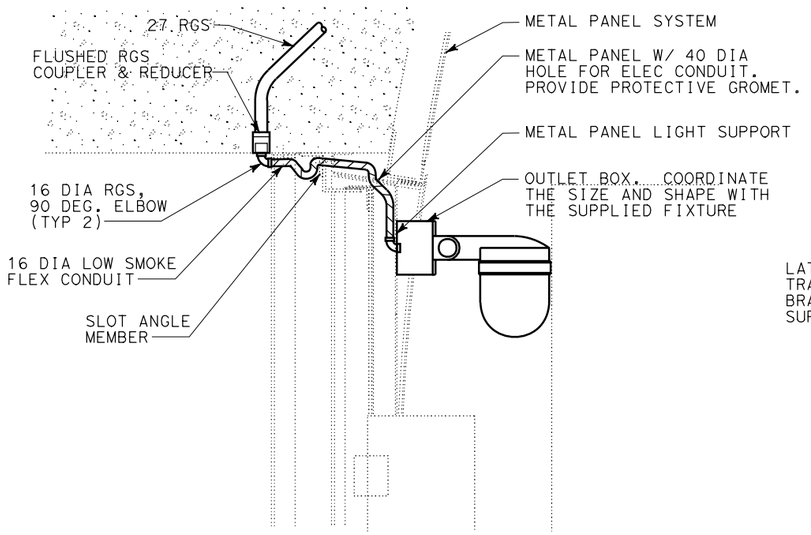

COORDINATE LOCATIONS WITH SYSTEMS FOR EMERGENCY TELEPHONES AND FIXTURE SUPPORT WITH ARCHITECTURAL. REFER TO SHEET A6.16.

1 F3 "BLUE LIGHT" MOUNTING

NO SCALE

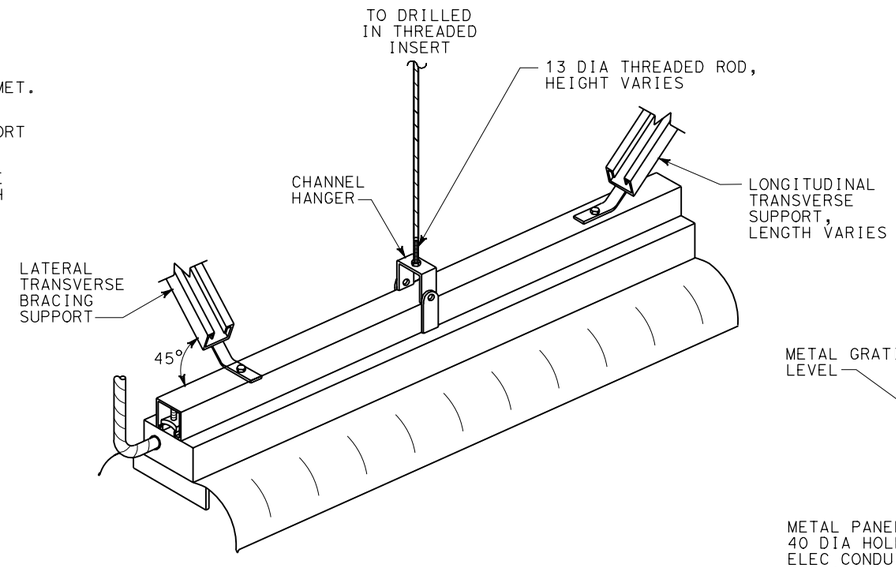

2 F2 INDUSTRIAL FLUORESCENT FIXTURE MOUNTING

NO SCALE

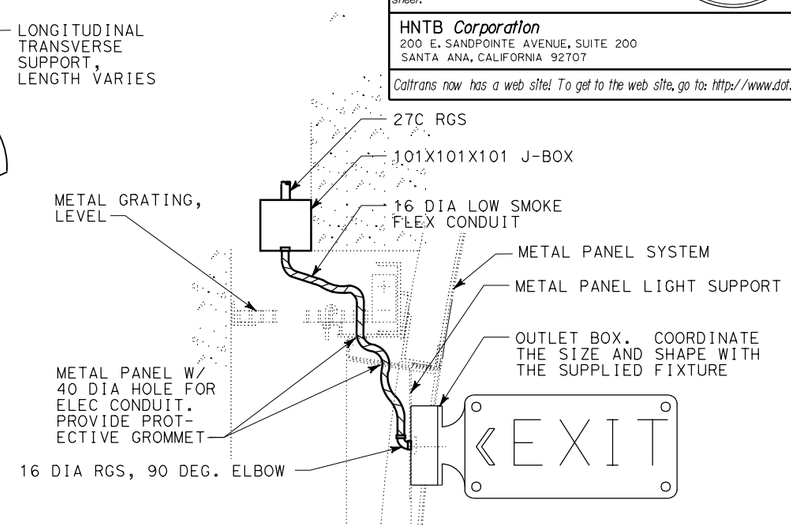

COORDINATE FIXTURE SUPPORT WITH ARCHITECTURAL. SEE GENERAL NOTE "B" ON SHEET E4.1.

3 E1 TUNNEL EXIT SIGN MOUNTING

NO SCALE

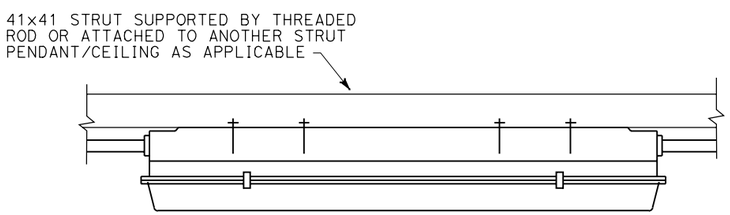

4 F1 INDUSTRIAL FLUORESCENT FIXTURE MOUNTING

NO SCALE

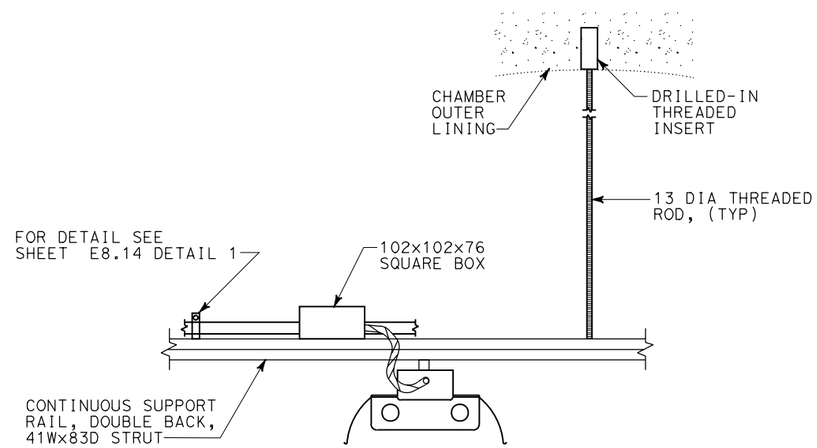

5 F2 TYPICAL STRUT SUPPORT LONGITUDINAL BRACE SECTION

NO SCALE

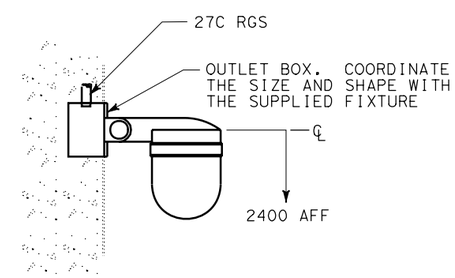

6 F4 VESTIBULE FIXTURE MOUNTING

NO SCALE

PS&E SUBMITTAL (11/18/05)
NOT FOR CONSTRUCTION

ALL DIMENSIONS ARE IN MILLIMETERS UNLESS OTHERWISE SHOWN

LIGHTING DETAILS NO. 4

SCALE AS SHOWN

E8.10

DIST	COUNTY	ROUTE	KILOMETER POST TOTAL PROJECT	SHEET No	TOTAL SHEETS
04	SM	1			

Caltrans Metric

Min Maung 9/30/05
REGISTERED ELECTRICAL ENGINEER

PLANS APPROVAL DATE

REGISTERED PROFESSIONAL ENGINEER MIN MAUNG No. E012210 Exp. 09/30/06 ELECT STATE OF CALIFORNIA

The State of California or its officers or agents shall not be responsible for the accuracy or completeness of electronic copies of this plan sheet.

HNTB *Corporation*
200 E. SANDPOINTE AVENUE, SUITE 200
SANTA ANA, CALIFORNIA 92707

Caltrans now has a web site! To get to the web site, go to: http://www.dot.ca.gov

CALCULATED/ DESIGNED BY	P. WHOBREY	DATE	9/30/05
CHECKED BY	M. MAUNG	REVISED BY	DATE REVISED
DESIGN OVERSIGHT	BEHZAD GOLEMOHAMMADI		

STATE OF CALIFORNIA - DEPARTMENT OF TRANSPORTATION
Caltrans
ELECTRICAL

RELATIVE BORDER SCALE IS IN MILLIMETERS 0 20 40 60 80

USERNAME => lGraham
DGN FILE => 41123uza123.dgn

CU 04240 | EA 1123U1

DATE PLOTTED => 09-NOV-2005
TIME PLOTTED => 15:11

LAST REVISION 00-00-00

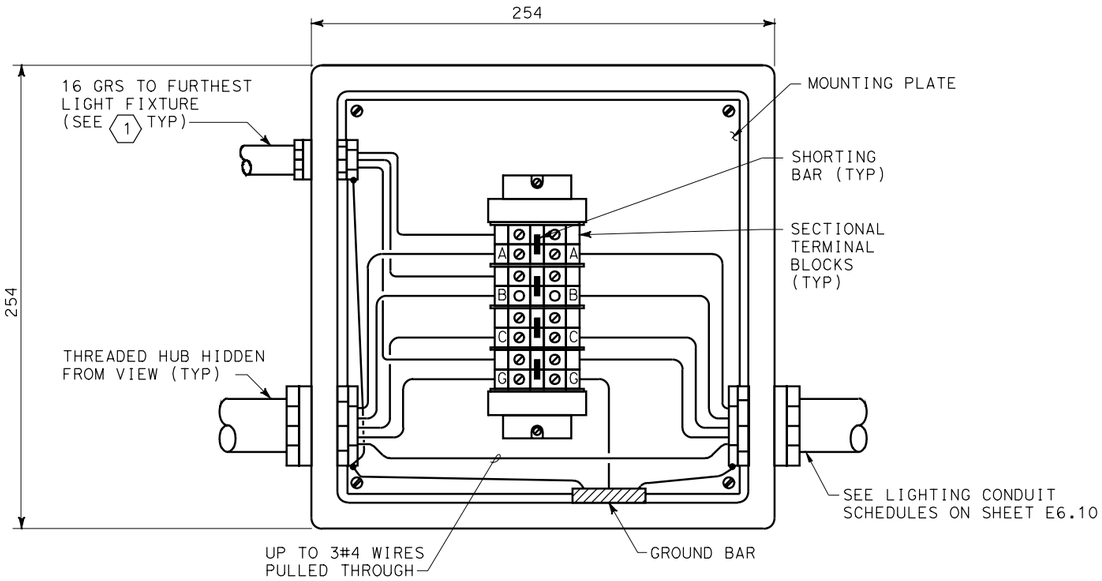

1 LIGHTING J-BOX TYPE "LB2"

NO SCALE

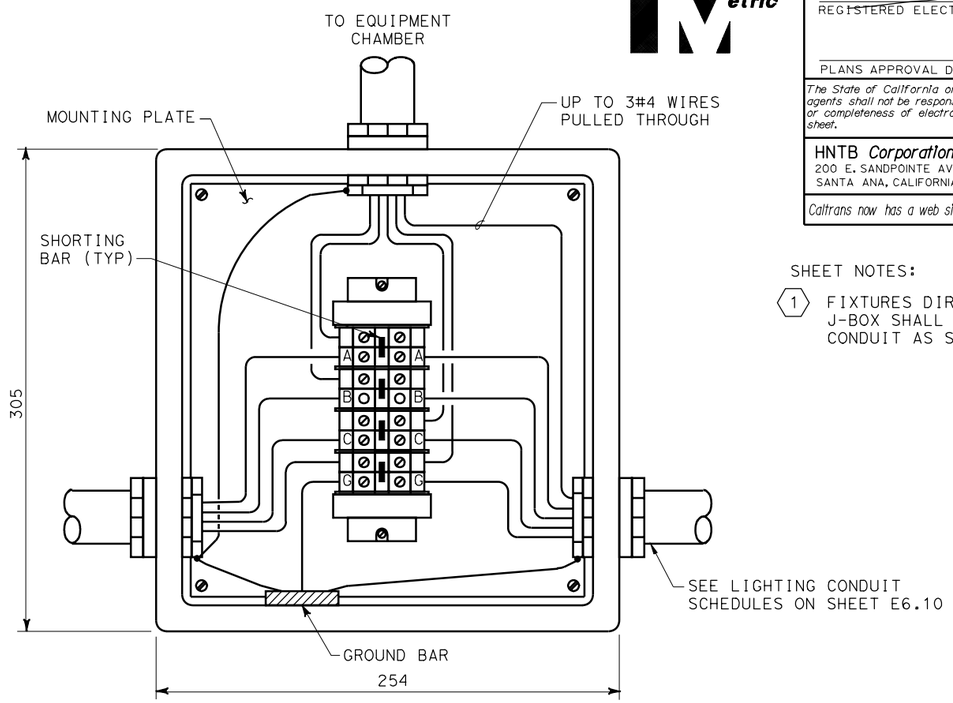

2 LIGHTING SUPPLY J-BOX TYPE "LB3"

NO SCALE

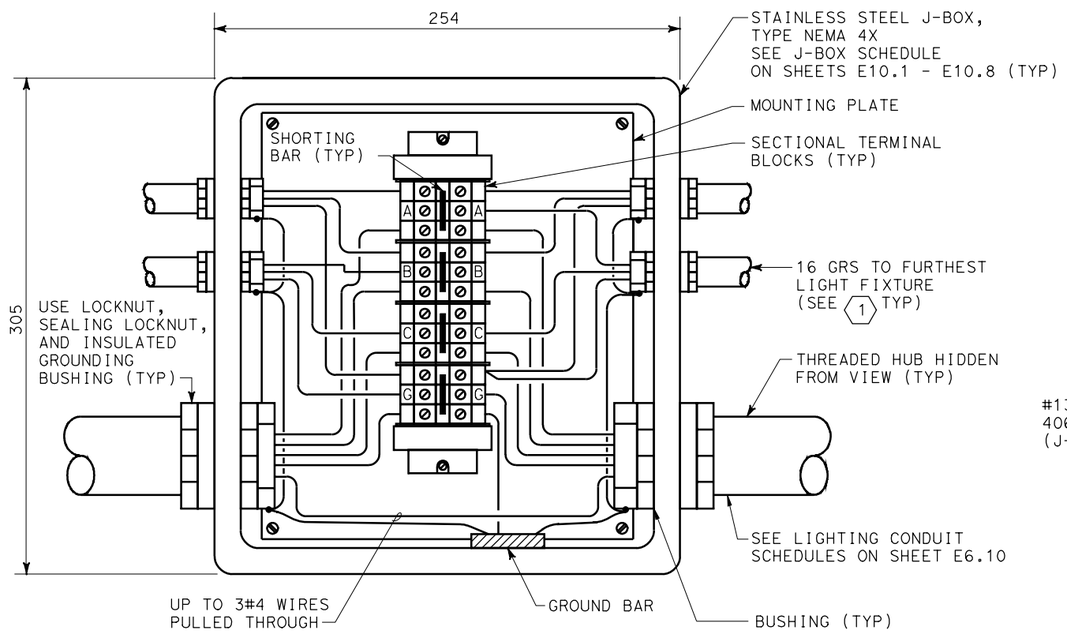

3 LIGHTING J-BOX TYPE "LB1"

NO SCALE

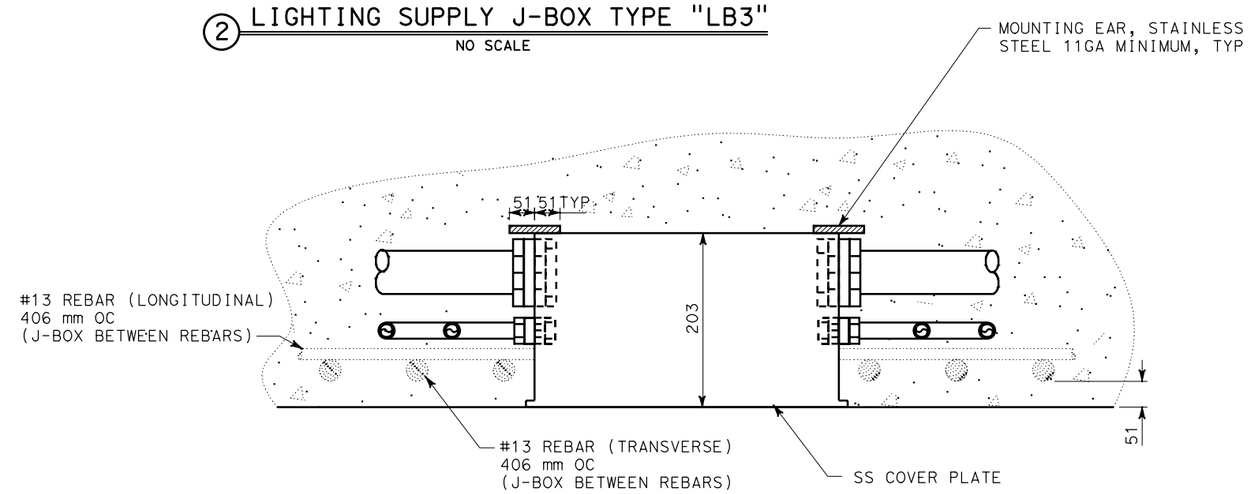

4 TYPICAL EMBEDDED LIGHTING J-BOX/REBAR

NO SCALE

DIST	COUNTY	ROUTE	KILOMETER POST TOTAL PROJECT	SHEET No	TOTAL SHEETS
04	SM	1			

Min Maung 9/30/05
REGISTERED ELECTRICAL ENGINEER

PLANS APPROVAL DATE

REGISTERED PROFESSIONAL ENGINEER MIN MAUNG No. E012210 Exp. 09/30/06 ELECT STATE OF CALIFORNIA

The State of California or its officers or agents shall not be responsible for the accuracy or completeness of electronic copies of this plan sheet.

HNTB *Corporation*
200 E. SANDPOINTE AVENUE, SUITE 200
SANTA ANA, CALIFORNIA 92707

Caltrans now has a web site! To get to the web site, go to: http://www.dot.ca.gov

SHEET NOTES:

1. FIXTURES DIRECTLY ADJACENT TO THE J-BOX SHALL BE WIRED WITH FLEXIBLE CONDUIT AS SHOWN ON SHEET E8.8.

ALL DIMENSIONS ARE IN MILLIMETERS UNLESS OTHERWISE SHOWN

J-BOX DETAILS NO. 1

SCALE AS SHOWN

E8.11

PS&E SUBMITTAL (11/18/05)
NOT FOR CONSTRUCTION

DATE	REVISED BY	DATE REVISED
9/30/05		

CALCULATED/DESIGNED BY: A. GOROVAYA
CHECKED BY: M. MAUNG
DESIGN OVERSIGHT: BEHZAD GOLEMOHAMMADI

STATE OF CALIFORNIA - DEPARTMENT OF TRANSPORTATION
Caltrans
ELECTRICAL

LAST REVISION 00-00-00
DATE PLOTTED => 09-NOV-2005
TIME PLOTTED => 15:11

RELATIVE BORDER SCALE IS IN MILLIMETERS 0 20 40 60 80

USERNAME => lGraham
DGN FILE => 41123uza124.dgn

CU 04240

EA 1123U1

DIST	COUNTY	ROUTE	KILOMETER POST TOTAL PROJECT	SHEET No	TOTAL SHEETS
04	SM	1			

Min Maung 9/30/05
REGISTERED ELECTRICAL ENGINEER

PLANS APPROVAL DATE

REGISTERED PROFESSIONAL ENGINEER MIN MAUNG No. E012210 Exp. 09/30/06 ELECT STATE OF CALIFORNIA

The State of California or its officers or agents shall not be responsible for the accuracy or completeness of electronic copies of this plan sheet.

HNTB *Corporation*
200 E. SANDPOINTE AVENUE, SUITE 200
SANTA ANA, CALIFORNIA 92707

Caltrans now has a web site! To get to the web site, go to: http://www.dot.ca.gov

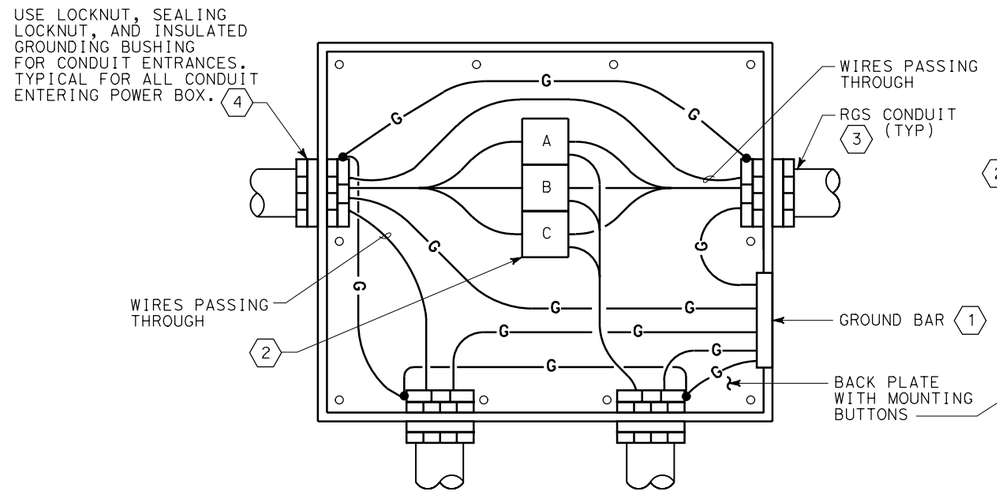

1 J-BOX TYPE "B1"
NO SCALE

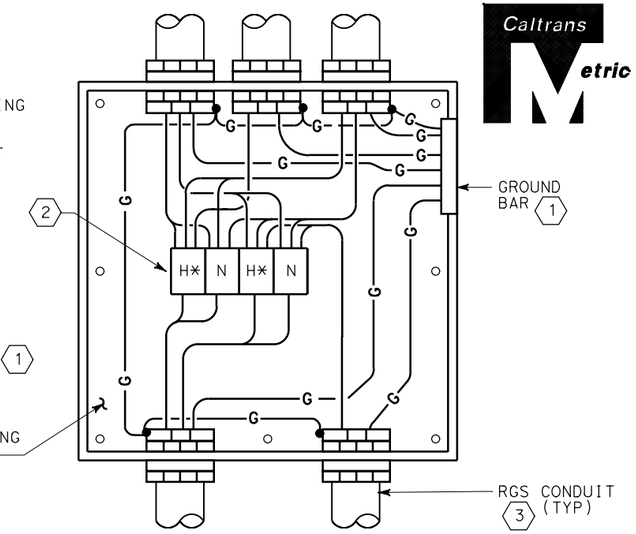

2 J-BOX TYPE "Cx" SERIES
NO SCALE

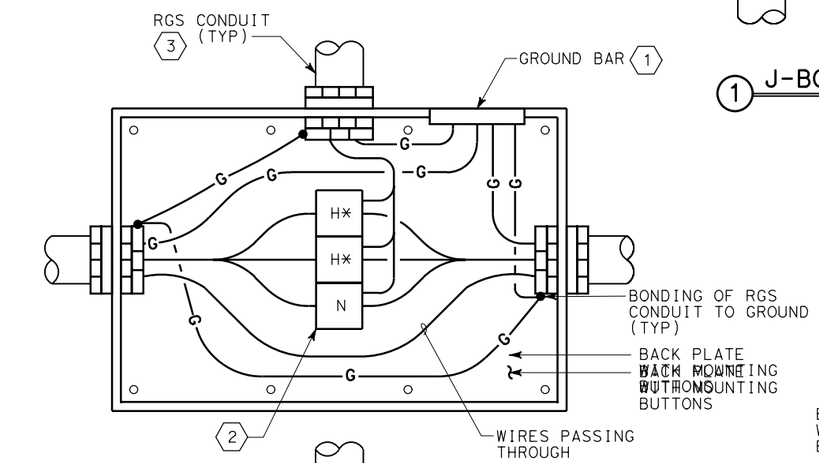

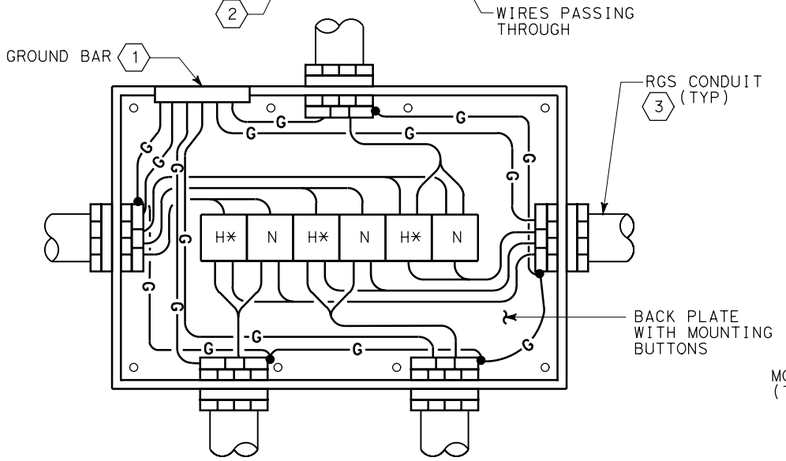

3 J-BOX TYPE "Dx" SERIES
NO SCALE

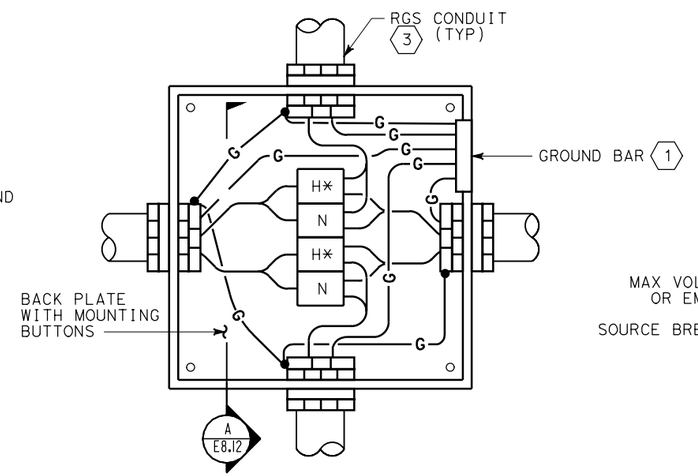

4 J-BOX TYPE "Ex" SERIES
NO SCALE

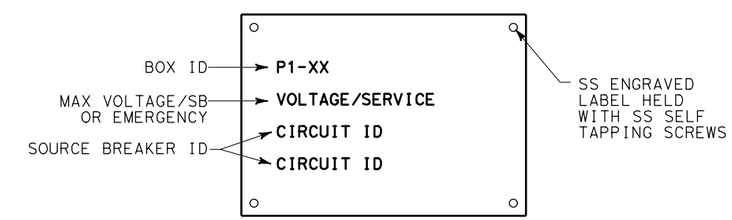

5 TYPICAL BOX LABEL
NO SCALE

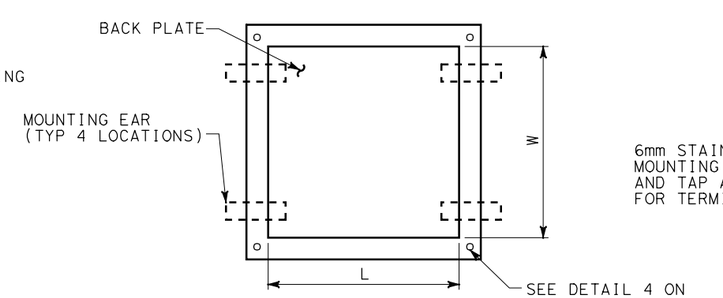

6 PLAN VIEW
NO SCALE

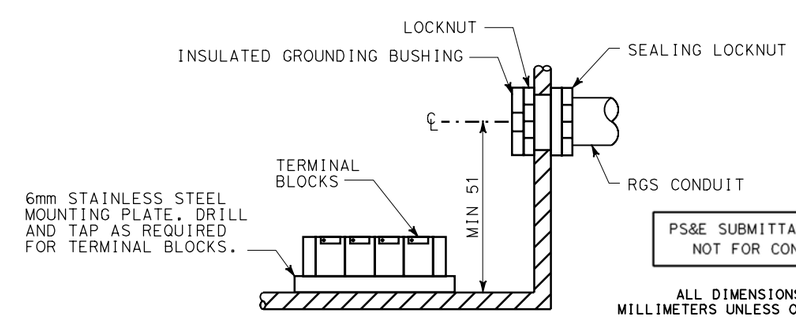

A SECTION
NO SCALE

SHEET NOTES:

1. FIELD VERIFY SUITABLE LOCATION OF GROUND BAR INSTALLED IN THE BOX. GROUND BAR SHALL HAVE MAXIMUM OF SIX TAPS.
2. POWER DISTRIBUTION BLOCKS, FERRAZ-SHAWNUT 6200 SERIES OR APPROVED EQUAL.
3. VERIFY THE ACTUAL COUNT OF CONDUIT ENTRANCE TO SPECIFIC POWER JUNCTION BOX NO. BY REFERRING TO POWER SCHEMATIC DIAGRAM.
4. PRE-PUNCHED CONDUIT OPENINGS TO BE PROVIDED AS REQUIRED PER SHEETS E4.1 TO E4.18.

* PROVIDE ACTUAL PHASE DESIGNATION AS APPLICABLE. (I.E. "A" OR "B")

PS&E SUBMITTAL (11/18/05)
NOT FOR CONSTRUCTION

ALL DIMENSIONS ARE IN MILLIMETERS UNLESS OTHERWISE SHOWN

J-BOX DETAILS NO. 2

SCALE AS SHOWN

E8.12

	DATE	REVISED BY	DATE REVISED
CALCULATED/DESIGNED BY	A. GOROVAYA		
CHECKED BY	M. MAUNG	9/30/05	

DESIGN OVERSIGHT: BEHZAD GOLEMOHAMMADI

STATE OF CALIFORNIA - DEPARTMENT OF TRANSPORTATION
Caltrans
ELECTRICAL

LAST REVISION 00-00-00
DATE PLOTTED => 09-NOV-2005
TIME PLOTTED => 15:11

RELATIVE BORDER SCALE IS IN MILLIMETERS 0 20 40 60 80

USERNAME => lGraham
DGN FILE => 41123uza125.dgn

CU 04240

EA 1123U1

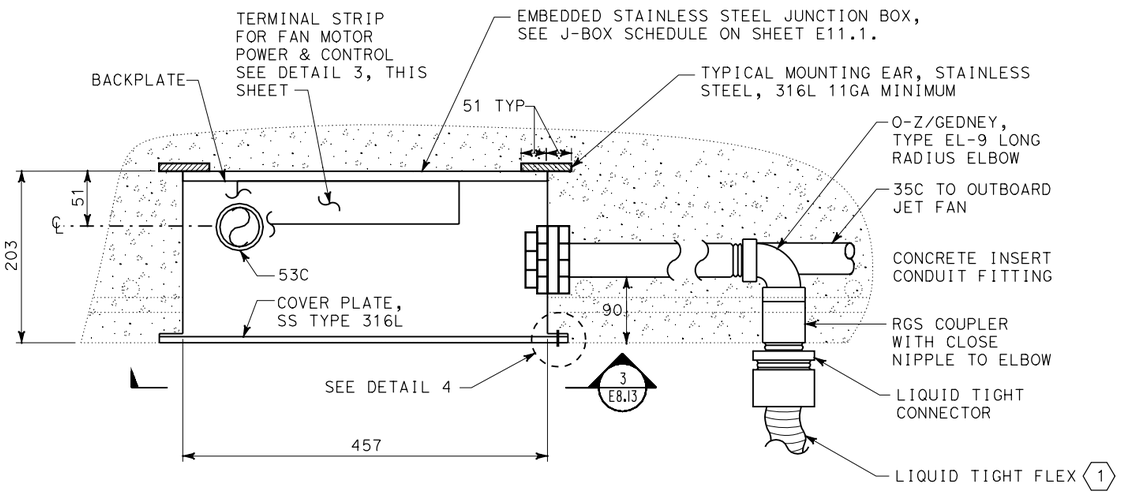

TYPICAL CEILING EMBEDDED JET FAN JUNCTION BOX

1 NO SCALE

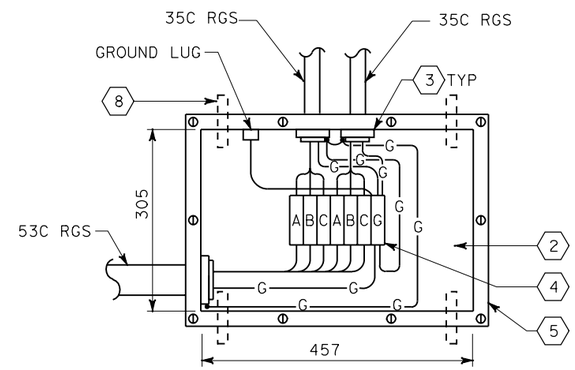

EMBEDDED JET FAN JUNCTION BOX - TYPE A1

3 NO SCALE

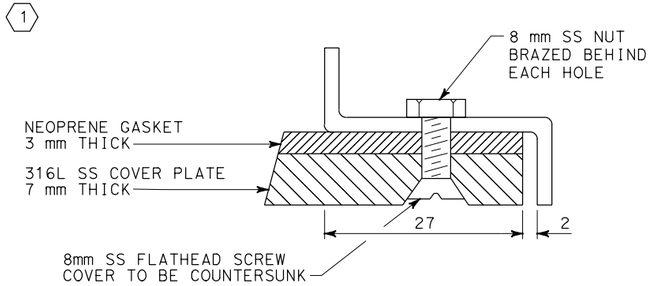

TYPICAL JUNCTION BOX COVER PLATE DETAIL

4 NO SCALE

SHEET NOTES:

1. SEE SPECIFICATIONS FOR HIGH TEMPERATURE/LOW SMOKE FLEXIBLE CONDUIT & CABLE FROM CEILING EMBEDMENT TO MOTOR TERMINAL BOX.
2. MOUNTING BACK-PLATE,
3. FACTORY DRILLED SLIP HOLE WITH THREADED CONDUIT HUB FITTING FOR CONDUIT ENTRANCES.
4. GOULD SHAWMUT, POWER DISTRIBUTION BLOCKS (6) 63150, (1) 63130.
5. O-Z/GEDNEY TYPE YR, CAST IRON BOX FOR FLUSH MOUNTING.
6. ROUTE WIRE FOR POWER CONNECTION THROUGH VMS SUPPORT.
7. FOR TYPICAL TUNNEL POWER RACEWAY LAYOUT, SEE SHEET E8.15.
8. MOUNTING EAR, 25.4 WIDE, TYPICAL ON 4 LOCATIONS.

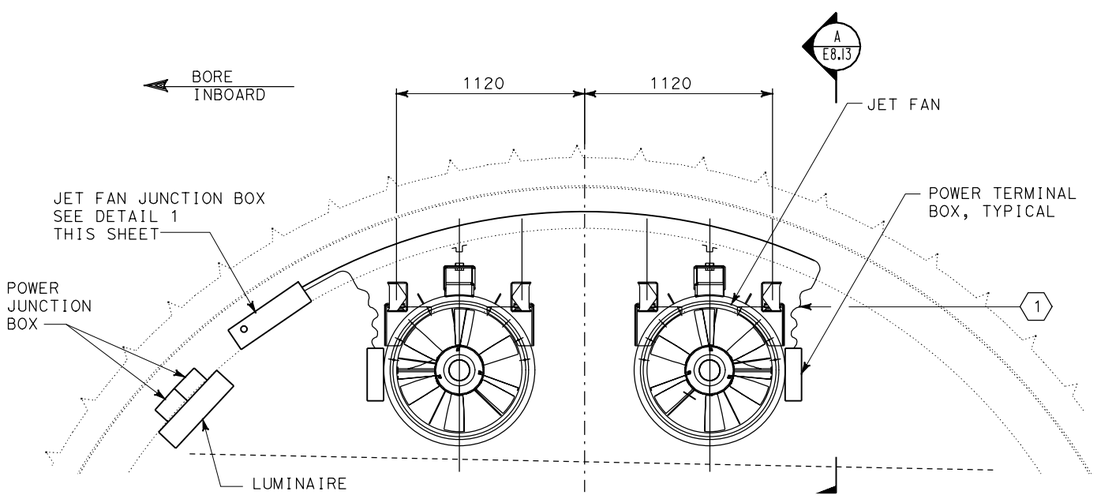

TYPICAL JET FAN POWER CONNECTION CROSS SECTION

2 NO SCALE

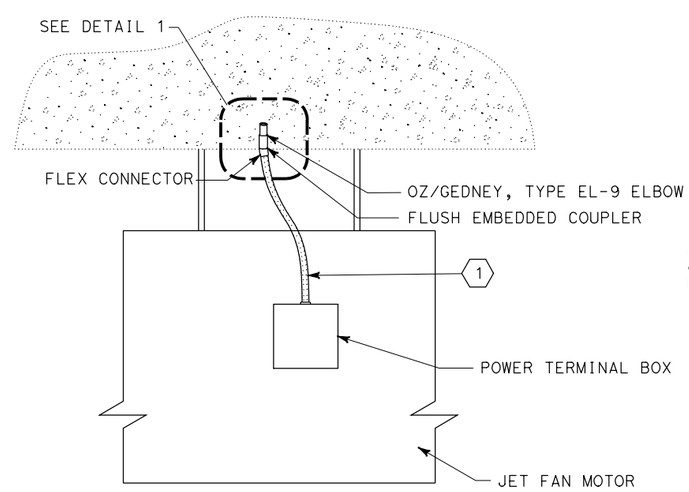

TYPICAL JET FAN POWER CONNECTION

A NO SCALE

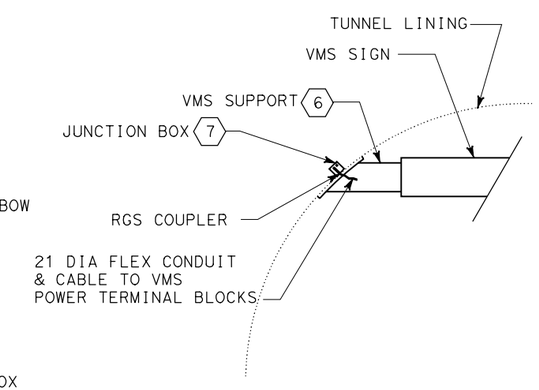

VMS POWER DETAIL

B NO SCALE

PS&E SUBMITTAL (11/18/05)
NOT FOR CONSTRUCTION

ALL DIMENSIONS ARE IN MILLIMETERS UNLESS OTHERWISE SHOWN

J-BOX DETAILS NO. 3

SCALE AS SHOWN

E8.13

DIST	COUNTY	ROUTE	KILOMETER POST TOTAL PROJECT	SHEET No	TOTAL SHEETS
04	SM	1			

Min Maung 9/30/05
REGISTERED ELECTRICAL ENGINEER

PLANS APPROVAL DATE

REGISTERED PROFESSIONAL ENGINEER MIN MAUNG No. E012210 Exp. 09/30/06 ELECT STATE OF CALIFORNIA

The State of California or its officers or agents shall not be responsible for the accuracy or completeness of electronic copies of this plan sheet.

HNTB *Corporation*
200 E. SANDPOINTE AVENUE, SUITE 200
SANTA ANA, CALIFORNIA 92707

Caltrans now has a web site! To get to the web site, go to: http://www.dot.ca.gov

DATE	REVISED BY	DATE REVISED
9/30/05		

CALCULATED/DESIGNED BY: A. GOROVAYA
CHECKED BY: M. MAUNG
DESIGN OVERSIGHT: BEHZAD GOLEMOHAMMADI

STATE OF CALIFORNIA - DEPARTMENT OF TRANSPORTATION
Caltrans
ELECTRICAL

LAST REVISION 00-00-00
DATE PLOTTED => 09-NOV-2005
TIME PLOTTED => 15:11

RELATIVE BORDER SCALE IS IN MILLIMETERS 0 20 40 60 80

USERNAME => lGraham
DGN FILE => 41123uza126.dgn

CU 04240
EA 1123U1

DIST	COUNTY	ROUTE	KILOMETER POST TOTAL PROJECT	SHEET No	TOTAL SHEETS
04	SM	1			

Min Maung 9/30/05
REGISTERED ELECTRICAL ENGINEER

PLANS APPROVAL DATE

REGISTERED PROFESSIONAL ENGINEER MIN MAUNG No. E012210 Exp. 09/30/06 ELECT STATE OF CALIFORNIA

The State of California or its officers or agents shall not be responsible for the accuracy or completeness of electronic copies of this plan sheet.

HNTB *Corporation*
200 E. SANDPOINTE AVENUE, SUITE 200
SANTA ANA, CALIFORNIA 92707

Caltrans now has a web site! To get to the web site, go to: http://www.dot.ca.gov

Caltrans Metric

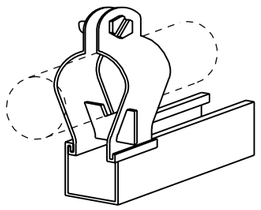

1 **CONDUIT CLAMP DETAIL**
NO SCALE

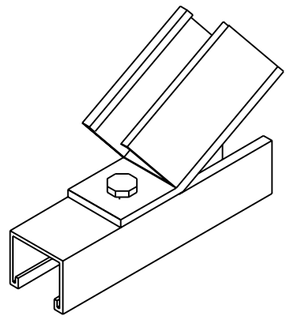

2 **BRACE SUPPORT ANGLE FITTING DETAIL**
NO SCALE

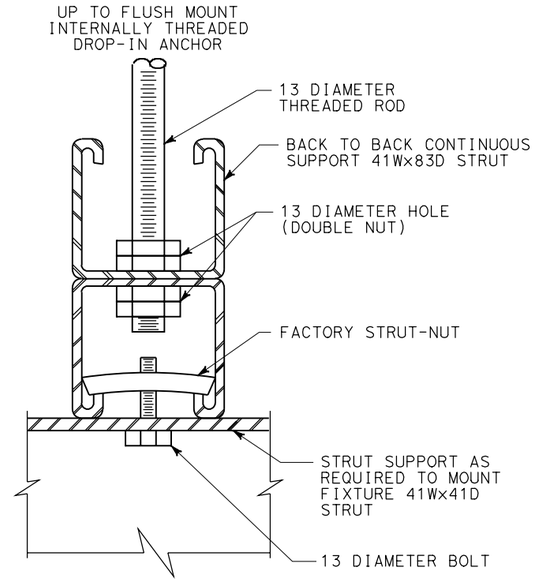

3 **STRUT DETAIL**
NO SCALE

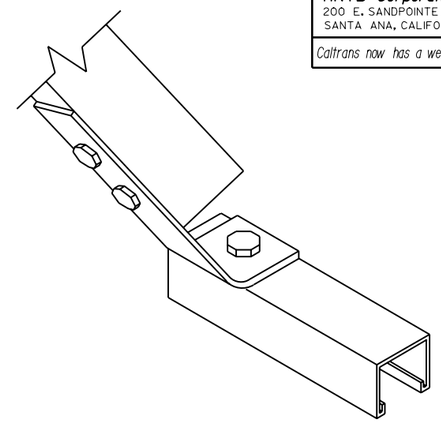

4 **BRACE SUPPORT ANGLE FITTING DETAIL**
NO SCALE

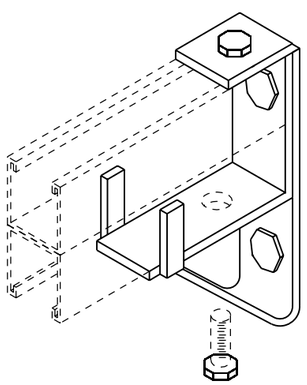

5 **CHAMBER BRACKET DETAIL**
NO SCALE

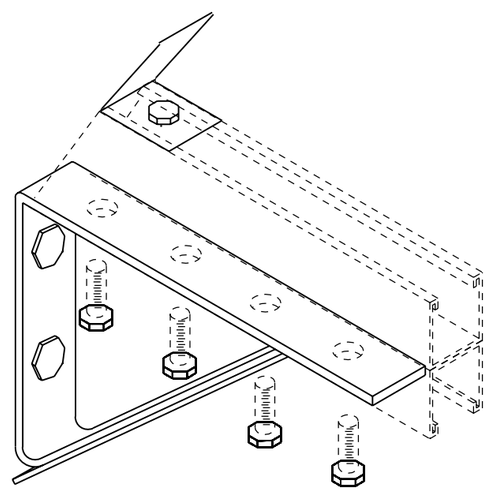

6 **CHAMBER BRACKET DETAIL**
NO SCALE

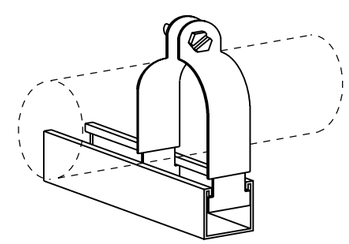

7 **CONDUIT CLAMP DETAIL**
NO SCALE

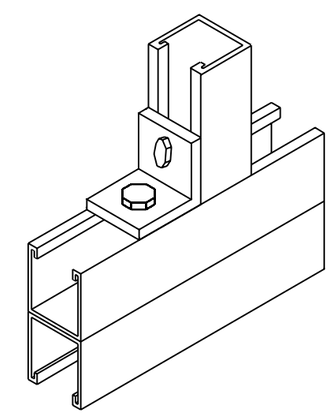

8 **FORMED STRUT ANGLE FITTING DETAIL**
NO SCALE

ALL DIMENSIONS ARE IN MILLIMETERS UNLESS OTHERWISE SHOWN

STRUT SUPPORT SYSTEM DETAILS
SCALE AS SHOWN

E8.14

PS&E SUBMITTAL (11/18/05)
NOT FOR CONSTRUCTION

CALCULATED/DESIGNED BY	A. GOROVAYA	DATE	REVISED BY
CHECKED BY	M. MAUNG	9/30/05	DATE REVISED

DESIGN OVERSIGHT
BEHZAD GOLEMOHAMMADI

STATE OF CALIFORNIA - DEPARTMENT OF TRANSPORTATION
Caltrans
ELECTRICAL

LAST REVISION 00-00-00
DATE PLOTTED => 09-NOV-2005
TIME PLOTTED => 15:12

RELATIVE BORDER SCALE IS IN MILLIMETERS 0 20 40 60 80

USERNAME => lGraham
DGN FILE => 41123uza127.dgn

CU 04240

EA 1123U1

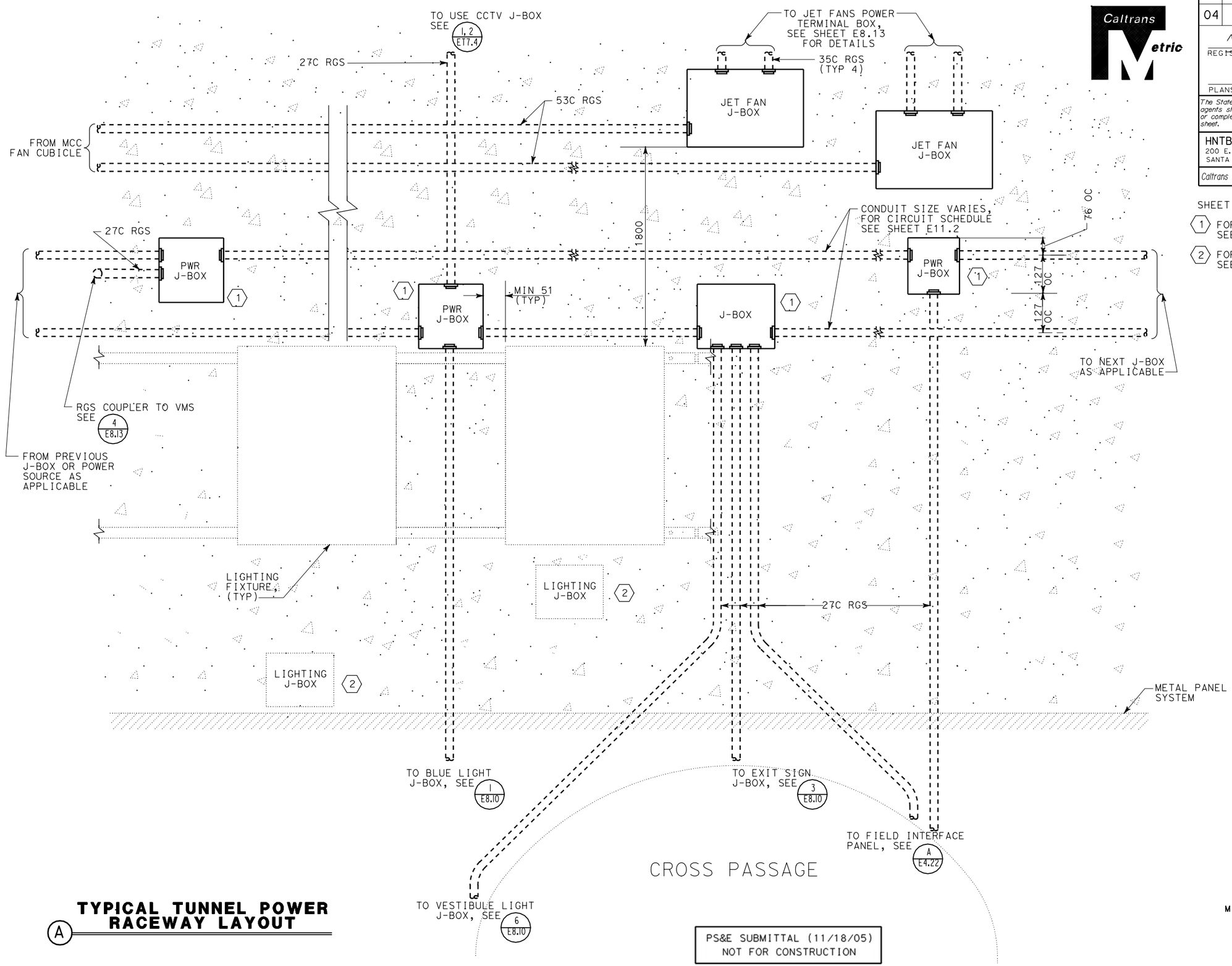

A TYPICAL TUNNEL POWER RACEWAY LAYOUT

PS&E SUBMITTAL (11/18/05)
NOT FOR CONSTRUCTION

Caltrans Metric

DIST	COUNTY	ROUTE	KILOMETER POST TOTAL PROJECT	SHEET No	TOTAL SHEETS
04	SM	1			

Min Maung 9/30/05
REGISTERED ELECTRICAL ENGINEER

PLANS APPROVAL DATE

REGISTERED PROFESSIONAL ENGINEER MIN MAUNG No. E012210 Exp. 09/30/06 ELECT STATE OF CALIFORNIA

The State of California or its officers or agents shall not be responsible for the accuracy or completeness of electronic copies of this plan sheet.

HNTB *Corporation*
200 E. SANDPOINTE AVENUE, SUITE 200
SANTA ANA, CALIFORNIA 92707

Caltrans now has a web site! To get to the web site, go to: http://www.dot.ca.gov

SHEET NOTES:

1. FOR POWER JUNCTION BOX SIZE SEE SHEET E11.1.
2. FOR LIGHTING JBOX LAYOUT, SEE SHEET E8.8.

ALL DIMENSIONS ARE IN MILLIMETERS UNLESS OTHERWISE SHOWN

POWER DETAILS

NO SCALE

E8.15

	DATE	REVISED BY	DATE REVISED
CALCULATED/DESIGNED BY	A. GOROVAYA		
CHECKED BY	M. MAUNG		
DESIGN OVERSIGHT	BEHZAD GOLEMOHAMMADI		

STATE OF CALIFORNIA - DEPARTMENT OF TRANSPORTATION
Caltrans
ELECTRICAL

LAST REVISION 00-00-00
DATE PLOTTED => 09-NOV-2005
TIME PLOTTED => 15:12

RELATIVE BORDER SCALE IS IN MILLIMETERS 0 20 40 60 80

USERNAME => lGraham
DGN FILE => 41123uza128.dgn

CU 04240

EA 1123U1

DIST	COUNTY	ROUTE	KILOMETER POST TOTAL PROJECT	SHEET No	TOTAL SHEETS
04	SM	1			

Min Maung 9/30/05
REGISTERED ELECTRICAL ENGINEER

PLANS APPROVAL DATE

REGISTERED PROFESSIONAL ENGINEER MIN MAUNG No. E012210 Exp. 09/30/06 ELECT STATE OF CALIFORNIA

The State of California or its officers or agents shall not be responsible for the accuracy or completeness of electronic copies of this plan sheet.

HNTB *Corporation*
200 E. SANDPOINTE AVENUE, SUITE 200
SANTA ANA, CALIFORNIA 92707

Caltrans now has a web site! To get to the web site, go to: http://www.dot.ca.gov

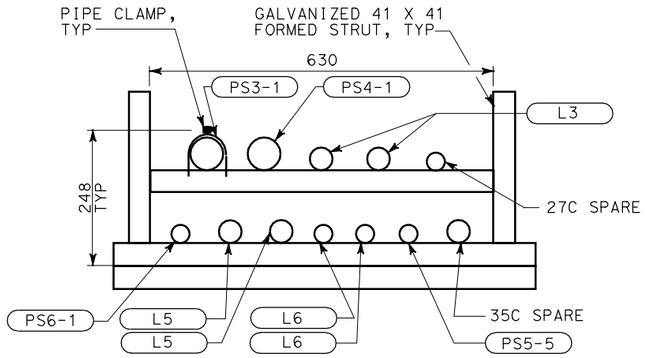

SOUTH CHAMBER OVERHEAD ENTRY TO NB ROADWAY
(A) NO SCALE

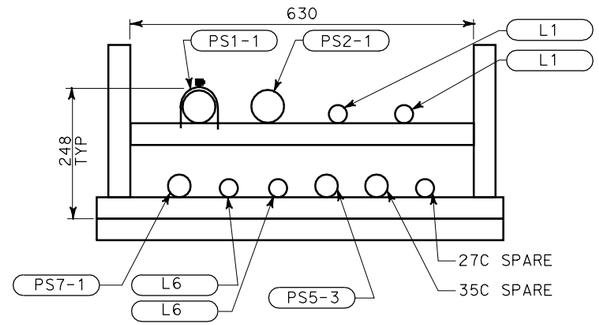

SOUTH CHAMBER OVERHEAD ENTRY TO SB ROADWAY
(B) NO SCALE

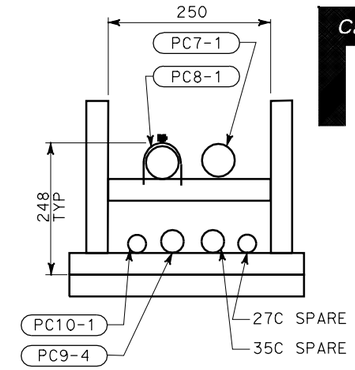

CENTER CHAMBER OVERHEAD ENTRY TO NB ROADWAY AT CPEV
(C) NO SCALE

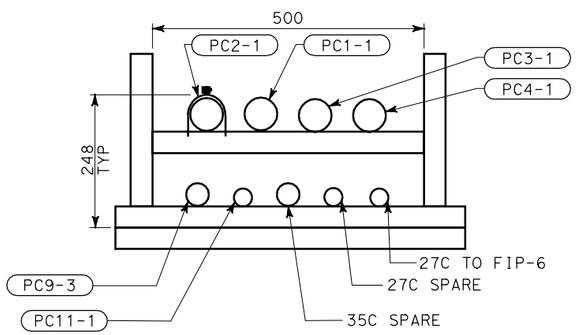

CENTER CHAMBER OVERHEAD ENTRY TO SB ROADWAY
(D) NO SCALE

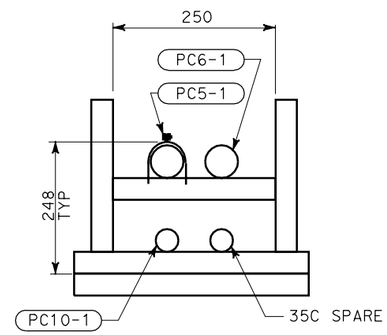

CENTER CHAMBER OVERHEAD ENTRY TO NB ROADWAY AT EMERGENCY ACCESS
(E) NO SCALE

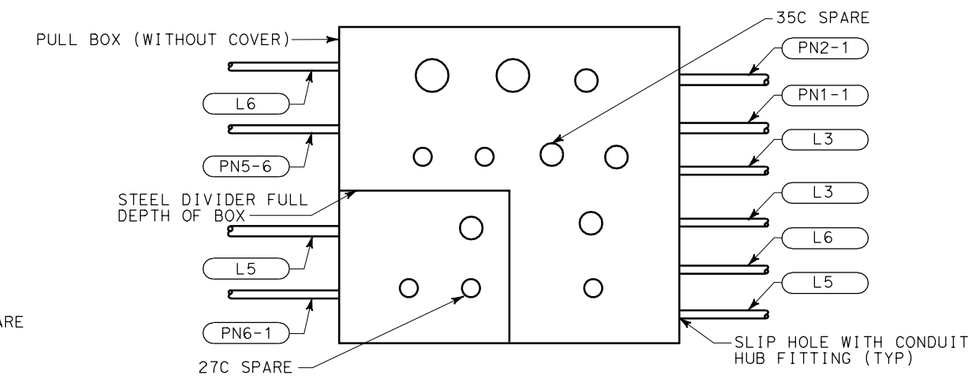

NORTH CHAMBER OVERHEAD ENTRY TO SB ROADWAY
(F) NO SCALE

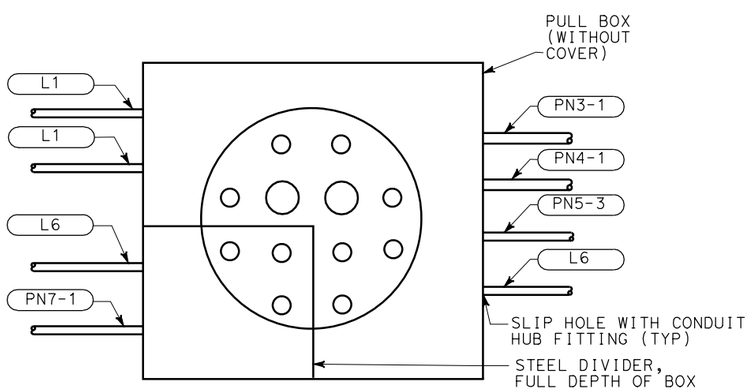

NORTH CHAMBER OVERHEAD ENTRY TO NB ROADWAY
(G) NO SCALE

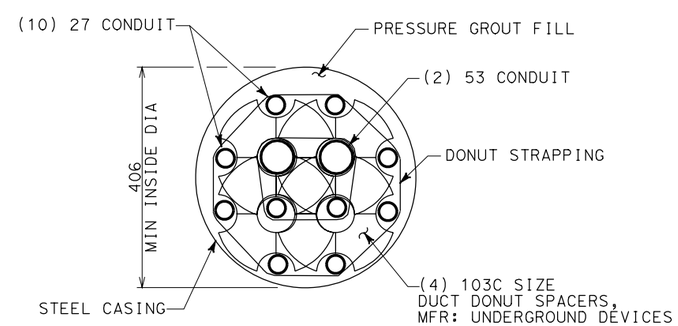

NORTH CHAMBER BORE CONSTRUCTION DETAIL TO NB ROADWAY
(H) NO SCALE

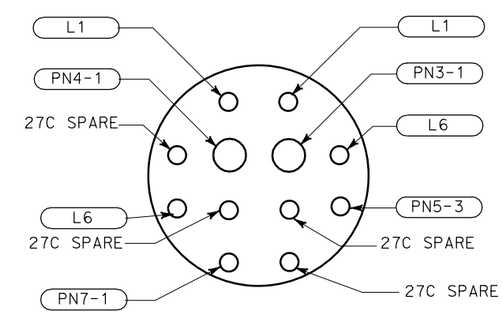

NORTH CHAMBER BORE CIRCUIT DESIGNATIONS TO NB ROADWAY
(I) NO SCALE

ALL DIMENSIONS ARE IN MILLIMETERS UNLESS OTHERWISE SHOWN

PS&E SUBMITTAL (11/18/05)
NOT FOR CONSTRUCTION

CHAMBER POWER DETAILS
SCALE AS SHOWN

E8.16

REVISED BY	DATE REVISED
A. GOROVAYA	9/30/05

CALCULATED/DESIGNED BY	CHECKED BY
M. MAUNG	BEHZAD GOLEMOHAMMADI

DESIGN OVERSIGHT

STATE OF CALIFORNIA - DEPARTMENT OF TRANSPORTATION
Caltrans
ELECTRICAL

LAST REVISION 00-00-00 | DATE PLOTTED => 09-NOV-2005 | TIME PLOTTED => 15:12

RELATIVE BORDER SCALE IS IN MILLIMETERS 0 20 40 60 80

USERNAME => lGraham
DGN FILE => 41123uza129.dgn

CU 04240 | EA 1123U1

DIST	COUNTY	ROUTE	KILOMETER POST TOTAL PROJECT	SHEET No	TOTAL SHEETS
04	SM	1			

Min Maung 9/30/05
REGISTERED ELECTRICAL ENGINEER

PLANS APPROVAL DATE

REGISTERED PROFESSIONAL ENGINEER MIN MAUNG No. E012210 Exp. 09/30/06 ELECT STATE OF CALIFORNIA

The State of California or its officers or agents shall not be responsible for the accuracy or completeness of electronic copies of this plan sheet.

HNTB *Corporation*
200 E. SANDPOINTE AVENUE, SUITE 200
SANTA ANA, CALIFORNIA 92707

Caltrans now has a web site! To get to the web site, go to: http://www.dot.ca.gov

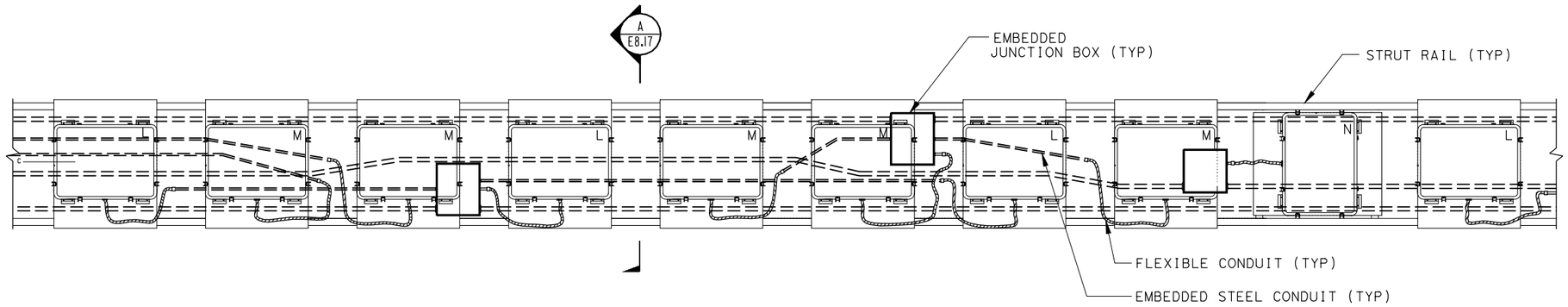

TYPICAL TUNNEL LUMINAIRE AND RACEWAY LAYOUT IN SCALLOP AREA

NO SCALE

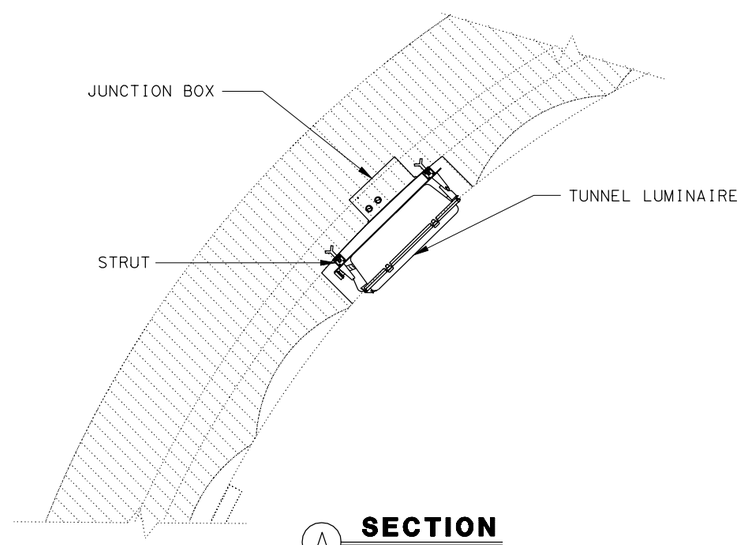

(A) SECTION

NO SCALE

PS&E SUBMITTAL (11/18/05)
NOT FOR CONSTRUCTION

ALL DIMENSIONS ARE IN MILLIMETERS UNLESS OTHERWISE SHOWN

SCALLOP AREA LIGHTING DETAILS

SCALE AS SHOWN

E8.17

	REVISED BY	DATE	DATE REVISED
CALCULATED/DESIGNED BY	A. GOROVAYA		
CHECKED BY	M. MAUNG	9/30/05	

DESIGN OVERSIGHT
BEHZAD GOLEMOHAMMADI

STATE OF CALIFORNIA - DEPARTMENT OF TRANSPORTATION
Caltrans
ELECTRICAL

LAST REVISION 00-00-00
DATE PLOTTED => 09-NOV-2005
TIME PLOTTED => 15:12

RELATIVE BORDER SCALE IS IN MILLIMETERS 0 20 40 60 80

USERNAME => lGraham
DGN FILE => 41123uza130.dgn

CU 04240

EA 1123U1

DIST	COUNTY	ROUTE	KILOMETER POST TOTAL PROJECT	SHEET No	TOTAL SHEETS
04	SM	1			

Min Maung 9/30/05
REGISTERED ELECTRICAL ENGINEER

PLANS APPROVAL DATE

REGISTERED PROFESSIONAL ENGINEER
MIN MAUNG
No. E012210
Exp. 09/30/06
ELECT
STATE OF CALIFORNIA

The State of California or its officers or agents shall not be responsible for the accuracy or completeness of electronic copies of this plan sheet.

HNTB *Corporation*
200 E. SANDPOINTE AVENUE, SUITE 200
SANTA ANA, CALIFORNIA 92707

Caltrans now has a web site! To get to the web site, go to: http://www.dot.ca.gov

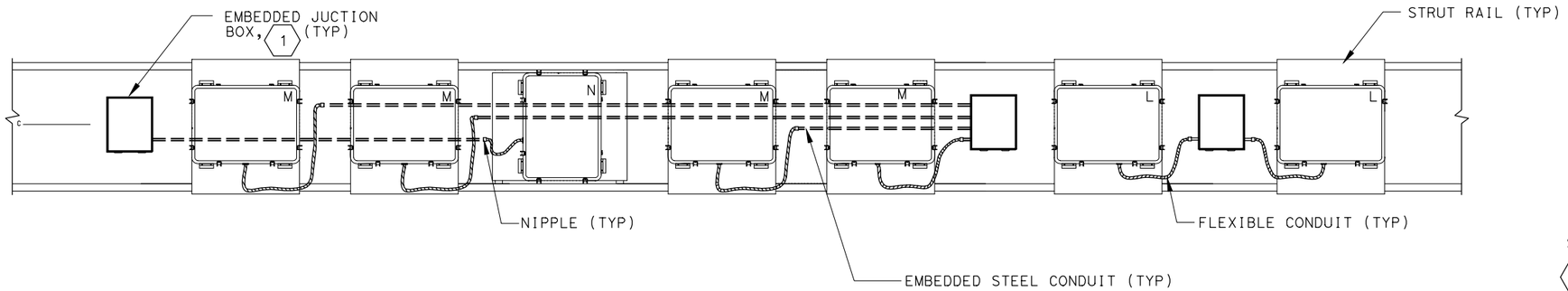

SHEET NOTES:

1. SEE SHEETS E10.1 TO E10.4 FOR JUCTION BOX STATION COORDINATES.

TYPICAL TUNNEL LUMINAIRE AND RACEWAY LAYOUT IN TEXTURE AREA

PS&E SUBMITTAL (11/18/05)
NOT FOR CONSTRUCTION

ALL DIMENSIONS ARE IN MILLIMETERS UNLESS OTHERWISE SHOWN

TEXTURED AREA LIGHTING DETAILS

NO SCALE

E8.18

DATE	REVISED BY	DATE REVISED

CALCULATED/DESIGNED BY: A. GOROVAYA
CHECKED BY: M. MAUNG
DESIGN OVERSIGHT: BEHZAD GOLEMOHAMMADI

STATE OF CALIFORNIA - DEPARTMENT OF TRANSPORTATION
Caltrans
ELECTRICAL

LAST REVISION 00-00-00
DATE PLOTTED => 09-NOV-2005
TIME PLOTTED => 15:12

RELATIVE BORDER SCALE IS IN MILLIMETERS 0 20 40 60 80

USERNAME => lGraham
DGN FILE => 41123uza131.dgn

CU 04240

EA 1123U1

DIST	COUNTY	ROUTE	KILOMETER POST TOTAL PROJECT	SHEET No	TOTAL SHEETS
04	SM	1			

Min Maung 9/30/05
REGISTERED ELECTRICAL ENGINEER

PLANS APPROVAL DATE

REGISTERED PROFESSIONAL ENGINEER
MIN MAUNG
No. E012210
Exp. 09/30/06
ELECT
STATE OF CALIFORNIA

The State of California or its officers or agents shall not be responsible for the accuracy or completeness of electronic copies of this plan sheet.

HNTB *Corporation*
200 E. SANDPOINTE AVENUE, SUITE 200
SANTA ANA, CALIFORNIA 92707

Caltrans now has a web site! To get to the web site, go to: http://www.dot.ca.gov

LIGHTING FIXTURE SCHEDULE

DESIGN	DESCRIPTION	LAMPS - QUANTITY & TYPE FLUORESCENT	HID	MOUNTING CEILING	WALL	RECESSED	PENDANT/STRUT MOUNTED	VOLTAGE	VOLT AMPERES	REMARKS
E1	EXIT SIGN, DOUBLE FACE, END MOUNT	LED			X			120	6 VA	END MOUNT, GREEN COLOR, 2300 ABOVE FINISHED SIDEWALK (IN TUNNEL). SEE DETAIL 3 SHEET E8.10.
E2	EXIT SIGN, SINGLE FACE, END MOUNT	LED			X			120	6 VA	GREEN COLOR. DIFFUSE LED LAMPS (IN EMERGENCY CROSS PASSAGE).
E3	EXIT SIGN, DOUBLE FACE, CEILING MOUNT	LED		X				120	6 VA	GREEN COLOR. DIFFUSE LED LAMPS. MOUNTED ON STRUT.
E4	EXIT SIGN, SINGLE FACE, BACK MOUNT	LED			X			120	6 VA	GREEN COLOR. DIFFUSE LED LAMPS. BACK MOUNTED ON THE WALL.
F1	1220 INDUSTRIAL FLUORESCENT WITH PRISMATIC ACRYLIC LENS	2-32W					X	120	65 VA	STRUT MOUNTED FIXTURE. SEE DETAIL 4 SHEET E8.10.
F2	1220 INDUSTRIAL FLUORESCENT 15% UPLIGHT, ELECTRONIC BALLAST	2-32W					X	120	65 VA	PENDANT MOUNT. SEE DETAIL 2 & 5 SHEET E8.10.
F3	VAPORTIGHT, COMPACT FLUORESCENT "BLUE LIGHT" TUNNEL FIXTURE	1-9W			X			120	15 VA	BLUE POLYCARBONATE GLOBE. UL LISTED FOR WET LOCATION. SEE DETAIL 1 SHEET E8.10.
F4	VAPORTIGHT, COMPACT FLUORESCENT FIXTURE IN VESTIBULE	1-9W			X			120	15 VA	OPAL POLYCARBONATE GLOBE, WALL MOUNTED FIXTURE, UL LISTED FOR WET LOCATION, SEE DETAIL 6 SHEET E8.10
H1a	TUNNEL LIGHT		400W HPS		X			480	528 VA	STRUT MOUNT, LEFT SIDE ELECTRICAL FEEDING, DISTRIBUTION TYPE - COUNTERBEAM, UL WET LABEL.
H1b	TUNNEL LIGHT		400W HPS		X			480	528 VA	STRUT MOUNT, RIGHT SIDE ELECTRICAL FEEDING, DISTRIBUTION TYPE - COUNTERBEAM, UL WET LABEL.
H2	TUNNEL LIGHT		150W HPS		X			480	240 VA	STRUT MOUNT, DISTRIBUTION TYPE - IV. U.L. WET LABEL.

PROVIDE LAMPS PER MANUFACTURER'S RECOMMENDATIONS.

PS&E SUBMITTAL (11/18/05)
NOT FOR CONSTRUCTION

ALL DIMENSIONS ARE IN MILLIMETERS UNLESS OTHERWISE SHOWN

LIGHTING SCHEDULE

E9.1

	DATE	REVISED BY	DATE REVISED
CALCULATED/DESIGNED BY	A. GOROVAYA		
CHECKED BY	M. MAUNG		9/30/05

DESIGN OVERSIGHT
BEHZAD GOLEMOHAMMADI

STATE OF CALIFORNIA - DEPARTMENT OF TRANSPORTATION
Caltrans
ELECTRICAL

LAST REVISION 00-00-00
DATE PLOTTED => 09-NOV-2005
TIME PLOTTED => 15:12

RELATIVE BORDER SCALE IS IN MILLIMETERS 0 20 40 60 80

USERNAME => lGraham
DGN FILE => 41123uza132.dgn

CU 04240

EA 1123U1

DAYTIME LIGHT FIXTURES
ROW 1

FIXTURE NO.	CIRCUIT NO.	PHASE	FROM JB NO.	ROADWAY STATION	FIXTURE TYPE	FUNCTION GROUP
1-001	NOT USED	.	.	.	.	.
1-002	MSLS-2A	BC	JB 1-003	118+39.40	H1a	M
1-003	MSLS-3E	AB	JB 1-001	118+40.30	H1a	L
1-004	MSLS-2A	CA	JB 1-003	118+42.10	H1a	M
1-005	MSLS-2A	AB	JB 1-003	118+43.00	H1a	M
1-006	MSLS-3E	BC	JB 1-004	118+44.50	H1a	L
1-007	MSLS-3E	CA	JB 1-004	118+45.95	H1a	L
1-008	MSLS-2A	BC	JB 1-006	118+48.05	H1a	M
1-009	MSLS-2A	CA	JB 1-006	118+48.90	H1a	M
1-010	MSLS-2A	AB	JB 1-006	118+50.70	H1a	M
1-011	MSLS-2A	BC	JB 1-006	118+51.60	H1a	M
1-012	MSLS-3E	AB	JB 1-007	118+52.90	H1a	L
1-013	MSLS-3E	BC	JB 1-007	118+54.10	H1a	L
1-014	MSLS-2A	CA	JB 1-009	118+55.60	H1a	M
1-015	MSLS-2A	AB	JB 1-009	118+56.50	H1a	M
1-016	MSLS-2A	BC	JB 1-009	118+58.30	H1a	M
1-017	MSLS-2A	CA	JB 1-009	118+59.20	H1a	M
1-018	MSLS-3E	CA	JB 1-010	118+60.70	H1a	L
1-019	MSLS-3E	AB	JB 1-010	118+62.20	H1a	L
1-020	MSLS-2A	AB	JB 1-012	118+63.70	H1a	M
1-021	MSLS-2A	BC	JB 1-012	118+64.60	H1a	M
1-022	MSLS-2A	CA	JB 1-012	118+66.40	H1a	M
1-023	MSLS-2A	AB	JB 1-012	118+67.30	H1a	M
1-024	MSLS-3E	BC	JB 1-013	118+68.80	H1a	L
1-025	MSLS-3E	CA	JB 1-013	118+70.30	H1a	L
1-026	MSLS-2A	BC	JB 1-015	118+71.80	H1a	M
1-027	MSLS-2A	CA	JB 1-015	118+72.70	H1a	M
1-028	MSLS-2A	AB	JB 1-015	118+74.50	H1a	M
1-029	MSLS-2A	BC	JB 1-015	118+75.40	H1a	M
1-030	MSLS-3E	AB	JB 1-016	118+76.90	H1a	L
1-031	MSLS-3E	BC	JB 1-016	118+78.40	H1a	L
1-032	MSLS-2A	CA	JB 1-018	118+79.90	H1a	M
1-033	MSLS-2A	AB	JB 1-018	118+80.80	H1a	M
1-034	MSLS-2A	BC	JB 1-018	118+82.60	H1a	M
1-035	MSLS-2A	CA	JB 1-018	118+83.50	H1a	M
1-036	MSLS-3E	CA	JB 1-019	118+85.00	H1a	L
1-037	MSLS-3E	AB	JB 1-019	118+86.50	H1a	L
1-038	MSLS-2A	AB	JB 1-021	118+88.00	H1a	M
1-039	MSLS-2A	BC	JB 1-021	118+88.90	H1a	M
1-040	MSLS-2A	CA	JB 1-021	118+90.70	H1a	M
1-041	MSLS-2A	AB	JB 1-021	118+91.60	H1a	M
1-042	MSLS-3E	BC	JB 1-022	118+93.10	H1a	L
1-043	MSLS-3E	CA	JB 1-022	118+94.60	H1a	L
1-044	MSLS-2A	BC	JB 1-024	118+96.10	H1a	M
1-045	MSLS-2A	CA	JB 1-024	118+97.00	H1a	M
1-046	MSLS-2A	AB	JB 1-024	118+98.80	H1a	M
1-047	MSLS-2A	BC	JB 1-024	118+99.70	H1a	M
1-048	MSLS-3E	AB	JB 1-025	119+01.20	H1a	L
1-049	MSLS-3E	BC	JB 1-025	119+02.70	H1a	L
1-050	MSLS-2A	CA	JB 1-027	119+04.20	H1a	M
1-051	MSLS-2A	AB	JB 1-027	119+05.10	H1a	M
1-052	MSLS-2A	BC	JB 1-027	119+06.90	H1a	M
1-053	MSLS-2A	CA	JB 1-027	119+07.80	H1a	M
1-054	MSLS-3E	CA	JB 1-028	119+09.30	H1a	L
1-055	MSLS-3E	AB	JB 1-028	119+10.80	H1a	L
1-056	MSLS-2A	AB	JB 1-030	119+12.30	H1a	M
1-057	MSLS-2A	BC	JB 1-030	119+13.20	H1a	M
1-058	MSLS-2A	CA	JB 1-030	119+15.00	H1a	M
1-059	MSLS-2A	AB	JB 1-030	119+15.90	H1a	M

DAYTIME LIGHT FIXTURES
ROW 1 (CONT)

FIXTURE NO.	CIRCUIT NO.	PHASE	FROM JB NO.	ROADWAY STATION	FIXTURE TYPE	FUNCTION GROUP
1-060	MSLS-3E	BC	JB 1-031	119+17.40	H1a	L
1-061	MSLS-3E	CA	JB 1-031	119+18.90	H1a	L
1-062	MSLS-2A	BC	JB 1-033	119+20.40	H1a	M
1-063	MSLS-2A	CA	JB 1-033	119+21.30	H1a	M
1-064	MSLS-2A	AB	JB 1-033	119+23.10	H1a	M
1-065	MSLS-2A	BC	JB 1-033	119+24.00	H1a	M
1-066	MSLS-3E	AB	JB 1-034	119+25.50	H1a	L
1-067	MSLS-3E	BC	JB 1-034	119+27.00	H1a	L
1-068	MSLS-2A	CA	JB 1-036	119+28.50	H1a	M
1-069	MSLS-2A	AB	JB 1-036	119+29.40	H1a	M
1-070	MSLS-2A	BC	JB 1-036	119+31.20	H1a	M
1-071	MSLS-2A	CA	JB 1-036	119+32.10	H1a	M
1-072	MSLS-3E	CA	JB 1-037	119+33.60	H1a	L
1-073	MSLS-3E	AB	JB 1-037	119+35.10	H1a	L
1-074	MSLS-2A	AB	JB 1-039	119+36.60	H1a	M
1-075	MSLS-2A	BC	JB 1-039	119+37.50	H1a	M
1-076	MSLS-2A	CA	JB 1-039	119+39.30	H1a	M
1-077	MSLS-2A	AB	JB 1-039	119+40.20	H1a	M
1-078	MSLS-3E	BC	JB 1-040	119+41.70	H1a	L
1-079	MSLS-3E	CA	JB 1-040	119+43.20	H1a	L
1-080	MSLS-2E	BC	JB 1-042	119+44.70	H1a	M
1-081	MSLS-2E	CA	JB 1-042	119+45.60	H1a	M
1-082	MSLS-2E	AB	JB 1-042	119+47.40	H1a	M
1-083	MSLS-2E	BC	JB 1-042	119+48.30	H1a	M
1-084	MSLS-3E	AB	JB 1-043	119+49.80	H1a	L
1-085	MSLS-3E	BC	JB 1-043	119+51.30	H1a	L
1-086	MSLS-2E	CA	JB 1-045	119+52.80	H1a	M
1-087	MSLS-2E	AB	JB 1-045	119+53.70	H1a	M
1-088	MSLS-2E	BC	JB 1-045	119+55.50	H1a	M
1-089	MSLS-2E	CA	JB 1-045	119+56.40	H1a	M
1-090	MSLS-3E	CA	JB 1-046	119+57.90	H1a	L
1-091	MSLS-3E	AB	JB 1-046	119+59.40	H1a	L
1-092	MSLS-2E	AB	JB 1-048	119+60.90	H1a	M
1-093	MSLS-2E	BC	JB 1-048	119+61.80	H1a	M
1-094	MSLS-2E	CA	JB 1-048	119+63.60	H1a	M
1-095	MSLS-2E	AB	JB 1-048	119+64.70	H1a	M
1-096	MSLS-3E	BC	JB 1-050	119+66.00	H1a	L
1-097	MSLS-2E	BC	JB 1-049	119+67.40	H1a	M
1-098	MSLS-2E	CA	JB 1-049	119+68.80	H1a	M
1-099	MSLS-3E	CA	JB 1-050	119+70.20	H1a	L
1-100	MSLS-2E	AB	JB 1-052	119+71.80	H1a	M
1-101	MSLS-2E	BC	JB 1-052	119+73.20	H1a	M
1-102	MSLS-3E	AB	JB 1-053	119+74.60	H1a	L
1-103	MSLS-2E	CA	JB 1-052	119+76.00	H1a	M
1-104	MSLS-2E	AB	JB 1-052	119+77.40	H1a	M
1-105	MSLS-3E	BC	JB 1-053	119+78.70	H1a	L
1-106	MSLS-2E	BC	JB 1-055	119+80.30	H1a	M
1-107	MSLS-2E	CA	JB 1-055	119+81.70	H1a	M
1-108	MSLS-3E	CA	JB 1-056	119+83.10	H1a	L
1-109	MSLS-2E	AB	JB 1-055	119+84.50	H1a	M
1-110	MSLS-2E	BC	JB 1-055	119+85.90	H1a	M
1-111	MSLS-3E	AB	JB 1-056	119+87.20	H1a	L
1-112	MSLS-2E	CA	JB 1-058	119+88.80	H1a	M
1-113	MSLS-2E	AB	JB 1-058	119+90.20	H1a	M
1-114	MSLS-3E	BC	JB 1-059	119+91.60	H1a	L
1-115	MSLS-2E	BC	JB 1-058	119+93.00	H1a	M
1-116	MSLS-2E	CA	JB 1-058	119+94.40	H1a	M
1-117	MSLS-3E	CA	JB 1-059	119+95.70	H1a	L
1-118	MSLS-2E	AB	JB 1-061	119+97.30	H1a	M

Caltrans Metric

DIST	COUNTY	ROUTE	KILOMETER POST TOTAL PROJECT	SHEET No	TOTAL SHEETS
04	SM	1			

Min Maung 9/30/05
REGISTERED ELECTRICAL ENGINEER

PLANS APPROVAL DATE

REGISTERED PROFESSIONAL ENGINEER MIN MAUNG No. E012210 Exp. 09/30/06 ELECT STATE OF CALIFORNIA

The State of California or its officers or agents shall not be responsible for the accuracy or completeness of electronic copies of this plan sheet.

HNTB *Corporation*
200 E. SANDPOINTE AVENUE, SUITE 200
SANTA ANA, CALIFORNIA 92707

Caltrans now has a web site! To get to the web site, go to: http://www.dot.ca.gov

ALL DIMENSIONS ARE IN MILLIMETERS UNLESS OTHERWISE SHOWN

TUNNEL LIGHTING FIXTURE SCHEDULE NO. 1

E9.2

PS&E SUBMITTAL (11/18/05)
NOT FOR CONSTRUCTION

REVISED BY	DATE	DATE REVISED
A. GOROVAYA	9/30/05	
CALCULATED/DESIGNED BY	CHECKED BY	
M. MAUNG		

DESIGN OVERSIGHT
BEHZAD GOLEMOHAMMADI

STATE OF CALIFORNIA - DEPARTMENT OF TRANSPORTATION
Caltrans
ELECTRICAL

LAST REVISION 00-00-00
DATE PLOTTED => 09-NOV-2005
TIME PLOTTED => 15:12

RELATIVE BORDER SCALE IS IN MILLIMETERS 0 20 40 60 80

USERNAME => lGraham
DGN FILE => 41123uza133.dgn

CU 04240

EA 1123U1

DAYTIME LIGHT FIXTURES ROW 1 (CONT)

FIXTURE NO.	CIRCUIT NO.	PHASE	FROM JB NO.	ROADWAY STATION	FIXTURE TYPE	FUNCTION GROUP
1-119	MSLS-2E	BC	JB 1-061	119+98.70	H1a	M
1-120	MSLS-3E	AB	JB 1-062	120+00.10	H1a	L
1-121	MSLS-2E	CA	JB 1-061	120+01.50	H1a	M
1-122	MSLS-2E	AB	JB 1-061	120+02.90	H1a	M
1-123	MSLS-3E	BC	JB 1-062	120+04.20	H1a	L
1-124	MSLS-2E	BC	JB 1-064	120+05.80	H1a	M
1-125	MSLS-2E	CA	JB 1-064	120+07.20	H1a	M
1-126	MSLS-3E	CA	JB 1-065	120+08.60	H1a	L
1-127	MSLS-2E	AB	JB 1-064	120+10.00	H1a	M
1-128	MSLS-2E	BC	JB 1-064	120+11.40	H1a	M
1-129	MSLS-3E	AB	JB 1-065	120+12.70	H1a	L
1-130	MSLS-2E	CA	JB 1-067	120+14.60	H1a	M
1-131	MSLS-2E	AB	JB 1-067	120+16.50	H1a	M
1-132	MSLS-3E	BC	JB 1-068	120+18.40	H1a	L
1-133	MSLS-2E	BC	JB 1-070	120+20.30	H1a	M
1-134	MSLS-2E	CA	JB 1-070	120+22.60	H1a	M
1-135	MSLS-3E	CA	JB 1-071	120+24.50	H1a	L
1-136	MSLS-2E	AB	JB 1-072	120+26.40	H1a	M
1-137	MSLS-2E	BC	JB 1-072	120+28.30	H1a	M
1-138	MSLS-3E	AB	JB 1-074	120+30.90	H1a	L
1-139	MSLS-2E	CA	JB 1-075	120+32.80	H1a	M
1-140	MSLS-2E	AB	JB 1-075	120+34.70	H1a	M
1-141	MSLS-3E	BC	JB 1-076	120+36.60	H1a	L
1-142	MSLS-2E	BC	JB 1-078	120+39.20	H1a	M
1-143	MSLS-2E	CA	JB 1-078	120+41.10	H1a	M
1-144	MSLS-3E	CA	JB 1-079	120+43.00	H1a	L
1-145	MSLS-2E	AB	JB 1-080	120+44.90	H1a	M
1-146	MSLS-2E	BC	JB 1-080	120+47.50	H1a	M
1-147	MSLS-3E	AB	JB 1-082	120+49.40	H1a	L
1-148	MSLS-2E	CA	JB 1-083	120+51.30	H1a	M
1-149	MSLS-2E	AB	JB 1-083	120+53.20	H1a	M
1-150	MSLS-3E	BC	JB 1-085	120+55.80	H1a	L
1-151	MSLS-2E	BC	JB 1-086	120+57.70	H1a	M
1-152	MSLS-2E	CA	JB 1-086	120+59.60	H1a	M
1-153	MSLS-3E	CA	JB 1-087	120+61.50	H1a	L
1-154	MSLS-2E	AB	JB 1-089	120+64.10	H1a	M
1-155	MSLS-2E	BC	JB 1-089	120+66.40	H1a	M
1-156	MSLS-3E	AB	JB 1-090	120+68.80	H1a	L
1-157	MSLS-2E	CA	JB 1-091	120+71.20	H1a	M
1-158	MSLS-3E	BC	JB 1-093	120+74.95	H1a	L
1-159	MSLS-2E	AB	JB 1-094	120+78.70	H1a	M
1-160	MSLS-3E	CA	JB 1-096	120+82.45	H1a	L
1-161	MSLS-2E	BC	JB 1-097	120+86.20	H1a	M
1-162	MSLS-3E	AB	JB 1-099	120+89.95	H1a	L
1-163	MSLS-2E	CA	JB 1-100	120+93.70	H1a	M
1-164	MSLS-4E	AB	JB 1-101	120+97.50	H2	24 HR
1-165	MSLS-2E	AB	JB 1-102	121+01.75	H2	M
1-166	MSLS-4E	BC	JB 1-103	121+06.00	H2	24 HR
1-167	MSLS-2E	BC	JB 1-104	121+10.25	H2	M
1-168	MSLS-4E	CA	JB 1-105	121+14.50	H2	24 HR
1-169	MSLS-2E	CA	JB 1-106	121+18.75	H2	M
1-170	MSLS-4E	AB	JB 1-107	121+23.00	H2	24 HR
1-171	MSLS-2E	AB	JB 1-108	121+27.25	H2	M
1-172	MSLS-4E	BC	JB 1-109	121+31.50	H2	24 HR
1-173	MSLS-4E	CA	JB 1-110	121+40.00	H2	24 HR
1-174	MSLS-4E	AB	JB 1-111	121+48.50	H2	24 HR
1-175	MSLS-4E	BC	JB 1-112	121+57.00	H2	24 HR
1-176	MSLS-4E	CA	JB 1-113	121+65.50	H2	24 HR
1-177	MSLS-4E	AB	JB 1-114	121+74.00	H2	24 HR

DAYTIME LIGHT FIXTURES ROW 1 (CONT)

FIXTURE NO.	CIRCUIT NO.	PHASE	FROM JB NO.	ROADWAY STATION	FIXTURE TYPE	FUNCTION GROUP
1-178	MSLS-4E	BC	JB 1-115	121+82.50	H2	24 HR
1-179	MSLS-4E	CA	JB 1-116	121+91.00	H2	24 HR
1-180	MSLS-4E	AB	JB 1-117	121+99.50	H2	24 HR
1-181	MSLS-4E	BC	JB 1-118	122+08.00	H2	24 HR
1-182	MSLS-4E	CA	JB 1-119	122+16.50	H2	24 HR
1-183	MSLS-4E	AB	JB 1-120	122+25.00	H2	24 HR
1-184	MSLS-4E	BC	JB 1-121	122+33.50	H2	24 HR
1-185	MSLS-4E	CA	JB 1-122	122+42.00	H2	24 HR
1-186	MSLS-4E	AB	JB 1-123	122+50.50	H2	24 HR
1-187	MSLS-4E	BC	JB 1-124	122+59.00	H2	24 HR
1-188	MSLS-4E	CA	JB 1-125	122+67.50	H2	24 HR
1-189	MSLS-4E	AB	JB 1-126	122+76.00	H2	24 HR
1-190	MSLS-4E	BC	JB 1-127	122+84.50	H2	24 HR
1-191	MSLS-4E	CA	JB 1-128	122+93.00	H2	24 HR
1-192	MSLS-4E	AB	JB 1-129	123+01.50	H2	24 HR
1-193	MSLS-4E	BC	JB 1-130	123+10.00	H2	24 HR
1-194	MSLS-4E	CA	JB 1-131	123+18.50	H2	24 HR
1-195	MSLS-4E	AB	JB 1-132	123+27.00	H2	24 HR
1-196	MSLS-4E	BC	JB 1-133	123+35.50	H2	24 HR
1-197	MSLS-4E	CA	JB 1-134	123+44.00	H2	24 HR
1-198	MSLS-4E	AB	JB 1-135	123+52.50	H2	24 HR
1-199	MSLS-4E	BC	JB 1-136	123+61.00	H2	24 HR
1-200	MSLS-4E	CA	JB 1-137	123+69.50	H2	24 HR
1-201	MSLS-4E	AB	JB 1-138	123+78.00	H2	24 HR
1-202	MSLS-4E	BC	JB 1-139	123+86.50	H2	24 HR
1-203	MSLS-4E	CA	JB 1-140	123+95.00	H2	24 HR
1-204	MSLS-4E	AB	JB 1-141	124+03.50	H2	24 HR
1-205	MSLS-4E	BC	JB 1-142	124+12.00	H2	24 HR
1-206	MSLS-4E	CA	JB 1-143	124+20.50	H2	24 HR
1-207	MSLS-4E	AB	JB 1-144	124+29.00	H2	24 HR
1-208	MSLS-4E	BC	JB 1-145	124+37.50	H2	24 HR
1-209	MSLS-4E	CA	JB 1-146	124+46.00	H2	24 HR
1-210	MSLS-4E	AB	JB 1-147	124+54.50	H2	24 HR
1-211	MSLS-4E	BC	JB 1-148	124+63.00	H2	24 HR
1-212	MSLS-4E	CA	JB 1-149	124+71.50	H2	24 HR
1-213	MSLS-4E	AB	JB 1-150	124+80.00	H2	24 HR
1-214	MSLS-4E	BC	JB 1-151	124+88.50	H2	24 HR
1-215	MSLS-4E	CA	JB 1-152	124+97.00	H2	24 HR
1-216	MSLS-4E	AB	JB 1-153	125+05.50	H2	24 HR
1-217	MSLS-4E	BC	JB 1-154	125+14.00	H2	24 HR
1-218	MSLS-4E	CA	JB 1-155	125+22.50	H2	24 HR
1-219	MNLS-4J	AB	JB 1-156	125+31.00	H2	24 HR
1-220	MNLS-4J	BC	JB 1-157	125+39.50	H2	24 HR
1-221	MNLS-4J	CA	JB 1-158	125+48.00	H2	24 HR
1-222	MNLS-4J	AB	JB 1-159	125+56.50	H2	24 HR
1-223	MNLS-4J	BC	JB 1-160	125+65.00	H2	24 HR
1-224	MNLS-4J	CA	JB 1-161	125+73.50	H2	24 HR
1-225	MNLS-4J	AB	JB 1-162	125+82.00	H2	24 HR
1-226	MNLS-4J	BC	JB 1-163	125+90.50	H2	24 HR
1-227	MNLS-4J	CA	JB 1-164	125+99.00	H2	24 HR
1-228	MNLS-4J	AB	JB 1-165	126+07.50	H2	24 HR
1-229	MNLS-4J	BC	JB 1-166	126+16.00	H2	24 HR
1-230	MNLS-4J	CA	JB 1-167	126+24.50	H2	24 HR
1-231	MNLS-4J	AB	JB 1-168	126+33.00	H2	24 HR
1-232	MNLS-4J	BC	JB 1-169	126+41.50	H2	24 HR
1-233	MNLS-4J	CA	JB 1-170	126+50.00	H2	24 HR
1-234	MNLS-4J	AB	JB 1-171	126+58.50	H2	24 HR
1-235	MNLS-4J	BC	JB 1-172	126+67.00	H2	24 HR
1-236	MNLS-4J	CA	JB 1-173	126+75.50	H2	24 HR

Caltrans Metric

DIST	COUNTY	ROUTE	KILOMETER POST TOTAL PROJECT	SHEET No	TOTAL SHEETS
04	SM	1			

Min Maung 9/30/05
REGISTERED ELECTRICAL ENGINEER

PLANS APPROVAL DATE

REGISTERED PROFESSIONAL ENGINEER MIN MAUNG No. E012210 Exp. 09/30/06 ELECT STATE OF CALIFORNIA

The State of California or its officers or agents shall not be responsible for the accuracy or completeness of electronic copies of this plan sheet.

HNTB *Corporation*
200 E. SANDPOINTE AVENUE, SUITE 200
SANTA ANA, CALIFORNIA 92707

Caltrans now has a web site! To get to the web site, go to: http://www.dot.ca.gov

ALL DIMENSIONS ARE IN MILLIMETERS UNLESS OTHERWISE SHOWN

TUNNEL LIGHTING FIXTURE SCHEDULE NO.2

E9.3

PS&E SUBMITTAL (11/18/05)
NOT FOR CONSTRUCTION

		DATE	REVISED BY	DATE REVISED
CALCULATED/DESIGNED BY	A. GOROVAYA	9/30/05	M. MAUNG	
CHECKED BY				
DESIGN OVERSIGHT	BEHZAD GOLEMOHAMMADI			

STATE OF CALIFORNIA - DEPARTMENT OF TRANSPORTATION
Caltrans
ELECTRICAL

LAST REVISION 00-00-00
DATE PLOTTED => 09-NOV-2005
TIME PLOTTED => 15:12

RELATIVE BORDER SCALE IS IN MILLIMETERS 0 20 40 60 80

USERNAME => lGraham
DGN FILE => 41123uza134.dgn

CU 04240

EA 1123U1

DAYTIME LIGHT FIXTURES
ROW 1 (CONT)

FIXTURE NO.	CIRCUIT NO.	PHASE	FROM JB NO.	ROADWAY STATION	FIXTURE TYPE	FUNCTION GROUP
1-237	MNLS-4J	AB	JB 1-174	126+84.00	H2	24 HR
1-238	MNLS-4J	BC	JB 1-175	126+92.50	H2	24 HR
1-239	MNLS-4J	CA	JB 1-176	127+01.00	H2	24 HR
1-240	MNLS-4J	AB	JB 1-177	127+09.50	H2	24 HR
1-241	MNLS-4J	BC	JB 1-178	127+18.00	H2	24 HR
1-242	MNLS-4J	CA	JB 1-179	127+26.50	H2	24 HR
1-243	MNLS-4J	AB	JB 1-180	127+35.00	H2	24 HR
1-244	MNLS-4J	BC	JB 1-181	127+43.50	H2	24 HR
1-245	MNLS-4J	CA	JB 1-182	127+52.00	H2	24 HR
1-246	MNLS-4J	AB	JB 1-183	127+60.50	H2	24 HR
1-247	MNLS-4J	BC	JB 1-184	127+69.00	H2	24 HR
1-248	MNLS-4J	CA	JB 1-185	127+77.50	H2	24 HR
1-249	MNLS-4J	AB	JB 1-186	127+86.00	H2	24 HR
1-250	MNLS-4J	BC	JB 1-187	127+94.50	H2	24 HR
1-251	MNLS-4J	CA	JB 1-188	128+03.00	H2	24 HR
1-252	MNLS-4J	AB	JB 1-189	128+11.50	H2	24 HR
1-253	MNLS-4J	BC	JB 1-190	128+20.00	H2	24 HR
1-254	MNLS-4J	CA	JB 1-191	128+28.50	H2	24 HR
1-255	MNLS-4J	AB	JB 1-192	128+37.00	H2	24 HR
1-256	MNLS-4J	BC	JB 1-193	128+45.50	H2	24 HR
1-257	MNLS-4J	CA	JB 1-194	128+54.00	H2	24 HR
1-258	MNLS-4J	AB	JB 1-195	128+62.50	H2	24 HR
1-259	MNLS-4J	BC	JB 1-196	128+71.00	H2	24 HR
1-260	MNLS-4J	CA	JB 1-197	128+79.50	H2	24 HR
1-261	MNLS-4J	AB	JB 1-198	128+88.00	H2	24 HR
1-262	MNLS-4J	BC	JB 1-199	128+96.50	H2	24 HR
1-263	MNLS-4J	CA	JB 1-200	129+05.00	H2	24 HR
1-264	MNLS-4J	AB	JB 1-201	129+13.50	H2	24 HR
1-265	MNLS-4J	BC	JB 1-202	129+22.00	H2	24 HR
1-266	MNLS-4J	CA	JB 1-203	129+30.50	H2	24 HR
1-267	MNLS-4J	AB	JB 1-204	129+39.00	H2	24 HR
1-268	MNLS-4J	BC	JB 1-205	129+47.50	H2	24 HR
1-269	MNLS-4J	CA	JB 1-206	129+56.00	H2	24 HR
1-270	MNLS-4J	AB	JB 1-207	129+64.50	H2	24 HR
1-271	MNLS-4J	BC	JB 1-208	129+73.00	H2	24 HR
1-272	MNLS-4J	CA	JB 1-209	129+81.50	H2	24 HR
1-273	MNLS-4J	AB	JB 1-210	129+90.00	H2	24 HR
1-274	MNLS-4J	BC	JB 1-211	129+98.50	H2	24 HR
1-275	MNLS-4J	CA	JB 1-212	130+07.00	H2	24 HR
1-276	MNLS-4J	AB	JB 1-213	130+15.50	H2	24 HR
1-277	MNLS-4J	BC	JB 1-214	130+24.00	H2	24 HR
1-278	MNLS-4J	CA	JB 1-215	130+32.50	H2	24 HR
1-279	MNLS-4J	AB	JB 1-216	130+41.00	H2	24 HR
1-280	MNLS-4J	BC	JB 1-217	130+49.50	H2	24 HR
1-281	MNLS-4J	CA	JB 1-218	130+58.00	H2	24 HR
1-282	MNLS-4J	AB	JB 1-219	130+66.50	H2	24 HR
1-283	MNLS-2E	AB	JB 1-220	130+70.75	H2	M
1-284	MNLS-4J	BC	JB 1-221	130+75.00	H2	24 HR
1-285	MNLS-2E	BC	JB 1-222	130+79.25	H2	M
1-286	MNLS-4J	CA	JB 1-223	130+83.50	H2	24 HR
1-287	MNLS-2E	CA	JB 1-224	130+87.40	H2	M
1-288	MNLS-4J	AB	JB 1-225	130+91.30	H2	24 HR
1-289	MNLS-2E	AB	JB 1-226	130+95.20	H2	M
1-290	MNLS-4J	BC	JB 1-227	130+99.10	H2	24 HR
1-291	MNLS-2E	BC	JB 1-228	131+03.00	H2	M
1-292	MNLS-4J	CA	JB 1-229	131+06.90	H2	24 HR
1-293	MNLS-2E	CA	JB 1-230	131+10.80	H2	M
1-294	MNLS-4J	AB	JB 1-231	131+15.60	H2	24 HR
1-295	MNLS-2E	AB	JB 1-232	131+18.90	H2	M

DAYTIME LIGHT FIXTURES
ROW 1 (CONT)

FIXTURE NO.	CIRCUIT NO.	PHASE	FROM JB NO.	ROADWAY STATION	FIXTURE TYPE	FUNCTION GROUP
1-296	MNLS-4J	BC	JB 1-233	131+22.20	H2	24 HR
1-297	MNLS-2E	BC	JB 1-234	131+25.50	H2	M
1-298	MNLS-4J	CA	JB 1-235	131+28.80	H2	24 HR
1-299	MNLS-2E	CA	JB 1-236	131+32.10	H2	M
1-300	MNLS-4J	AB	JB 1-237	131+35.40	H2	24 HR
1-301	MNLS-2E	AB	JB 1-238	131+38.70	H2	M

DAYTIME LIGHT FIXTURES
ROW 2

FIXTURE NO.	CIRCUIT NO.	PHASE	FROM JB NO.	ROADWAY STATION	FIXTURE TYPE	FUNCTION GROUP
2-001	NOT USED					
2-002	MSLS-2J	BC	JB 2-003	118+39.40	H1b	M
2-003	MSLS-3J	AB	JB 2-001	118+40.30	H1b	L
2-004	MSLS-2J	CA	JB 2-003	118+42.10	H1b	M
2-005	MSLS-2J	AB	JB 2-003	118+43.00	H1b	M
2-006	MSLS-3J	BC	JB 2-004	118+44.50	H1b	L
2-007	MSLS-3J	CA	JB 2-004	118+45.95	H1b	L
2-008	MSLS-2J	BC	JB 2-006	118+48.05	H1b	M
2-009	MSLS-2J	CA	JB 2-006	118+48.90	H1b	M
2-010	MSLS-2J	AB	JB 2-006	118+50.70	H1b	M
2-011	MSLS-2J	BC	JB 2-006	118+51.60	H1b	M
2-012	MSLS-3J	AB	JB 2-007	118+52.90	H1b	L
2-013	MSLS-3J	BC	JB 2-007	118+54.10	H1b	L
2-014	MSLS-2J	CA	JB 2-009	118+55.60	H1b	M
2-015	MSLS-2J	AB	JB 2-009	118+56.50	H1b	M
2-016	MSLS-2J	BC	JB 2-009	118+58.30	H1b	M
2-017	MSLS-2J	CA	JB 2-009	118+59.20	H1b	M
2-018	MSLS-3J	CA	JB 2-010	118+60.70	H1b	L
2-019	MSLS-3J	AB	JB 2-010	118+62.20	H1b	L
2-020	MSLS-2J	AB	JB 2-012	118+63.70	H1b	M
2-021	MSLS-2J	BC	JB 2-012	118+64.60	H1b	M
2-022	MSLS-2J	CA	JB 2-012	118+66.40	H1b	M
2-023	MSLS-2J	AB	JB 2-012	118+67.30	H1b	M
2-024	MSLS-3J	BC	JB 2-013	118+68.80	H1b	L
2-025	MSLS-3J	CA	JB 2-013	118+70.30	H1b	L
2-026	MSLS-2J	BC	JB 2-015	118+71.80	H1b	M
2-027	MSLS-2J	CA	JB 2-015	118+72.70	H1b	M
2-028	MSLS-2J	AB	JB 2-015	118+74.50	H1b	M
2-029	MSLS-2J	BC	JB 2-015	118+75.40	H1b	M
2-030	MSLS-3J	AB	JB 2-016	118+76.90	H1b	L
2-031	MSLS-3J	BC	JB 2-016	118+78.40	H1b	L
2-032	MSLS-2J	CA	JB 2-018	118+79.90	H1b	M
2-033	MSLS-2J	AB	JB 2-018	118+80.80	H1b	M
2-034	MSLS-2J	BC	JB 2-018	118+82.60	H1b	M
2-035	MSLS-2J	CA	JB 2-018	118+83.50	H1b	M
2-036	MSLS-3J	CA	JB 2-019	118+85.00	H1b	L
2-037	MSLS-3J	AB	JB 2-019	118+86.50	H1b	L
2-038	MSLS-2J	AB	JB 2-021	118+88.00	H1b	M
2-039	MSLS-2J	BC	JB 2-021	118+88.90	H1b	M
2-040	MSLS-2J	CA	JB 2-021	118+90.70	H1b	M
2-041	MSLS-2J	AB	JB 2-021	118+91.60	H1b	M
2-042	MSLS-3J	BC	JB 2-022	118+93.10	H1b	L
2-043	MSLS-3J	CA	JB 2-022	118+94.60	H1b	L
2-044	MSLS-2J	BC	JB 2-024	118+96.10	H1b	M
2-045	MSLS-2J	CA	JB 2-024	118+97.00	H1b	M

Caltrans Metric

DIST	COUNTY	ROUTE	KILOMETER POST TOTAL PROJECT	SHEET No	TOTAL SHEETS
04	SM	1			

Min Maung 9/30/05
REGISTERED ELECTRICAL ENGINEER

PLANS APPROVAL DATE

REGISTERED PROFESSIONAL ENGINEER MIN MAUNG No. E012210 Exp. 09/30/06 ELECT STATE OF CALIFORNIA

The State of California or its officers or agents shall not be responsible for the accuracy or completeness of electronic copies of this plan sheet.

HNTB *Corporation*
200 E. SANDPOINTE AVENUE, SUITE 200
SANTA ANA, CALIFORNIA 92707

Caltrans now has a web site! To get to the web site, go to: http://www.dot.ca.gov

DATE	REVISED BY	DATE REVISED
9/30/05	M. MAUNG	

CALCULATED/DESIGNED BY: A. GOROVAYA
CHECKED BY: M. MAUNG

DESIGN OVERSIGHT: BEHZAD GOLEMOHAMMADI

STATE OF CALIFORNIA - DEPARTMENT OF TRANSPORTATION
Caltrans
ELECTRICAL

PS&E SUBMITTAL (11/18/05)
NOT FOR CONSTRUCTION

ALL DIMENSIONS ARE IN MILLIMETERS UNLESS OTHERWISE SHOWN

TUNNEL LIGHTING FIXTURE SCHEDULE NO. 3

E9.4

LAST REVISION 00-00-00
DATE PLOTTED => 09-NOV-2005
TIME PLOTTED => 15:12

RELATIVE BORDER SCALE IS IN MILLIMETERS 0 20 40 60 80

USERNAME => lGraham
DGN FILE => 41123uza135.dgn

CU 04240

EA 1123U1

DAYTIME LIGHT FIXTURES ROW 2 (CONT)

FIXTURE NO.	CIRCUIT NO.	PHASE	FROM JB NO.	ROADWAY STATION	FIXTURE TYPE	FUNCTION GROUP
2-046	MSLS-2J	AB	JB 2-024	118+98.80	H1b	M
2-047	MSLS-2J	BC	JB 2-024	118+99.70	H1b	M
2-048	MSLS-3J	AB	JB 2-025	119+01.20	H1b	L
2-049	MSLS-3J	BC	JB 2-025	119+02.70	H1b	L
2-050	MSLS-2J	CA	JB 2-027	119+04.20	H1b	M
2-051	MSLS-2J	AB	JB 2-027	119+05.10	H1b	M
2-052	MSLS-2J	BC	JB 2-027	119+06.90	H1b	M
2-053	MSLS-2J	CA	JB 2-027	119+07.80	H1b	M
2-054	MSLS-3J	CA	JB 2-028	119+09.30	H1b	L
2-055	MSLS-3J	AB	JB 2-028	119+10.80	H1b	L
2-056	MSLS-2J	AB	JB 2-030	119+12.30	H1b	M
2-057	MSLS-2J	BC	JB 2-030	119+13.20	H1b	M
2-058	MSLS-2J	CA	JB 2-030	119+15.00	H1b	M
2-059	MSLS-2J	AB	JB 2-030	119+15.90	H1b	M
2-060	MSLS-3J	BC	JB 2-031	119+17.40	H1b	L
2-061	MSLS-3J	CA	JB 2-031	119+18.90	H1b	L
2-062	MSLS-2J	BC	JB 2-033	119+20.40	H1b	M
2-063	MSLS-2J	CA	JB 2-033	119+21.30	H1b	M
2-064	MSLS-2J	AB	JB 2-033	119+23.10	H1b	M
2-065	MSLS-2J	BC	JB 2-033	119+24.00	H1b	M
2-066	MSLS-3J	AB	JB 2-034	119+25.50	H1b	L
2-067	MSLS-3J	BC	JB 2-034	119+27.00	H1b	L
2-068	MSLS-2J	CA	JB 2-036	119+28.50	H1b	M
2-069	MSLS-2J	AB	JB 2-036	119+29.40	H1b	M
2-070	MSLS-2J	BC	JB 2-036	119+31.20	H1b	M
2-071	MSLS-2J	CA	JB 2-036	119+32.10	H1b	M
2-072	MSLS-3J	CA	JB 2-037	119+33.60	H1b	L
2-073	MSLS-3J	AB	JB 2-037	119+35.10	H1b	L
2-074	MSLS-2J	AB	JB 2-039	119+36.60	H1b	M
2-075	MSLS-2J	BC	JB 2-039	119+37.50	H1b	M
2-076	MSLS-2J	CA	JB 2-039	119+39.30	H1b	M
2-077	MSLS-2J	AB	JB 2-039	119+40.20	H1b	M
2-078	MSLS-3J	BC	JB 2-040	119+41.70	H1b	L
2-079	MSLS-3J	CA	JB 2-040	119+43.20	H1b	L
2-080	MSLS-3A	BC	JB 2-042	119+44.70	H1b	M
2-081	MSLS-3A	CA	JB 2-042	119+45.60	H1b	M
2-082	MSLS-3A	AB	JB 2-042	119+47.40	H1b	M
2-083	MSLS-3A	BC	JB 2-042	119+48.30	H1b	M
2-084	MSLS-3J	AB	JB 2-043	119+49.80	H1b	L
2-085	MSLS-3J	BC	JB 2-043	119+51.30	H1b	L
2-086	MSLS-3A	CA	JB 2-045	119+52.80	H1b	M
2-087	MSLS-3A	AB	JB 2-045	119+53.70	H1b	M
2-088	MSLS-3A	BC	JB 2-045	119+55.50	H1b	M
2-089	MSLS-3A	CA	JB 2-045	119+56.40	H1b	M
2-090	MSLS-3J	CA	JB 2-046	119+57.90	H1b	L
2-091	MSLS-3J	AB	JB 2-046	119+59.40	H1b	L
2-092	MSLS-3A	AB	JB 2-048	119+60.90	H1b	M
2-093	MSLS-3A	BC	JB 2-048	119+61.80	H1b	M
2-094	MSLS-3A	CA	JB 2-048	119+63.60	H1b	M
2-095	MSLS-3A	AB	JB 2-048	119+64.70	H1b	M
2-096	MSLS-3J	BC	JB 2-050	119+66.00	H1b	L
2-097	MSLS-3A	BC	JB 2-049	119+67.40	H1b	M
2-098	MSLS-3A	CA	JB 2-049	119+68.80	H1b	M
2-099	MSLS-3J	CA	JB 2-050	119+70.20	H1b	L
2-100	MSLS-3A	AB	JB 2-052	119+71.80	H1b	M
2-101	MSLS-3A	BC	JB 2-052	119+73.20	H1b	M
2-102	MSLS-3J	AB	JB 2-053	119+74.60	H1b	L
2-103	MSLS-3A	CA	JB 2-052	119+76.00	H1b	M
2-104	MSLS-3A	AB	JB 2-052	119+77.40	H1b	M

DAYTIME LIGHT FIXTURES ROW 2 (CONT)

FIXTURE NO.	CIRCUIT NO.	PHASE	FROM JB NO.	ROADWAY STATION	FIXTURE TYPE	FUNCTION GROUP
2-105	MSLS-3J	BC	JB 2-053	119+78.70	H1b	L
2-106	MSLS-3A	BC	JB 2-055	119+80.30	H1b	M
2-107	MSLS-3A	CA	JB 2-055	119+81.70	H1b	M
2-108	MSLS-3J	CA	JB 2-056	119+83.10	H1b	L
2-109	MSLS-3A	AB	JB 2-055	119+84.50	H1b	M
2-110	MSLS-3A	BC	JB 2-055	119+85.90	H1b	M
2-111	MSLS-3J	AB	JB 2-056	119+87.20	H1b	L
2-112	MSLS-3A	CA	JB 2-058	119+88.80	H1b	M
2-113	MSLS-3A	AB	JB 2-058	119+90.20	H1b	M
2-114	MSLS-3J	BC	JB 2-059	119+91.60	H1b	L
2-115	MSLS-3A	BC	JB 2-058	119+93.00	H1b	M
2-116	MSLS-3A	CA	JB 2-058	119+94.40	H1b	M
2-117	MSLS-3J	CA	JB 2-059	119+95.70	H1b	L
2-118	MSLS-3A	AB	JB 2-061	119+97.30	H1b	M
2-119	MSLS-3A	BC	JB 2-061	119+98.70	H1b	M
2-120	MSLS-3J	AB	JB 2-062	120+00.10	H1b	L
2-121	MSLS-3A	CA	JB 2-061	120+01.50	H1b	M
2-122	MSLS-3A	AB	JB 2-061	120+02.90	H1b	M
2-123	MSLS-3J	BC	JB 2-062	120+04.20	H1b	L
2-124	MSLS-3A	BC	JB 2-064	120+05.80	H1b	M
2-125	MSLS-3A	CA	JB 2-064	120+07.20	H1b	M
2-126	MSLS-3J	CA	JB 2-065	120+08.60	H1b	L
2-127	MSLS-3A	AB	JB 2-064	120+10.00	H1b	M
2-128	MSLS-3A	BC	JB 2-064	120+11.40	H1b	M
2-129	MSLS-3J	AB	JB 2-065	120+12.70	H1b	L
2-130	MSLS-3A	CA	JB 2-067	120+14.60	H1b	M
2-131	MSLS-3A	AB	JB 2-067	120+16.50	H1b	M
2-132	MSLS-3J	BC	JB 2-068	120+18.40	H1b	L
2-133	MSLS-3A	BC	JB 2-070	120+20.30	H1b	M
2-134	MSLS-3A	CA	JB 2-070	120+22.60	H1b	M
2-135	MSLS-3J	CA	JB 2-071	120+24.50	H1b	L
2-136	MSLS-3A	AB	JB 2-072	120+26.40	H1b	M
2-137	MSLS-3A	BC	JB 2-072	120+28.30	H1b	M
2-138	MSLS-3J	AB	JB 2-074	120+30.90	H1b	L
2-139	MSLS-3A	CA	JB 2-075	120+32.80	H1b	M
2-140	MSLS-3A	AB	JB 2-075	120+34.70	H1b	M
2-141	MSLS-3J	BC	JB 2-076	120+36.60	H1b	L
2-142	MSLS-3A	BC	JB 2-078	120+39.20	H1b	M
2-143	MSLS-3A	CA	JB 2-078	120+41.10	H1b	M
2-144	MSLS-3J	CA	JB 2-079	120+43.00	H1b	L
2-145	MSLS-3A	AB	JB 2-080	120+44.90	H1b	M
2-146	MSLS-3A	BC	JB 2-080	120+47.50	H1b	M
2-147	MSLS-3J	AB	JB 2-082	120+49.40	H1b	L
2-148	MSLS-3A	CA	JB 2-083	120+51.30	H1b	M
2-149	MSLS-3A	AB	JB 2-083	120+53.20	H1b	M
2-150	MSLS-3J	BC	JB 2-085	120+55.80	H1b	L
2-151	MSLS-3A	BC	JB 2-086	120+57.70	H1b	M
2-152	MSLS-3A	CA	JB 2-086	120+59.60	H1b	M
2-153	MSLS-3J	CA	JB 2-087	120+61.50	H1b	L
2-154	MSLS-3A	AB	JB 2-089	120+64.10	H1b	M
2-155	MSLS-3A	BC	JB 2-089	120+66.40	H1b	M
2-156	MSLS-3J	AB	JB 2-090	120+68.80	H1b	L
2-157	MSLS-3A	CA	JB 2-091	120+71.20	H1b	M
2-158	MSLS-3J	BC	JB 2-093	120+74.95	H1b	L
2-159	MSLS-3A	AB	JB 2-094	120+78.70	H1b	M
2-160	MSLS-3J	CA	JB 2-096	120+82.45	H1b	L
2-161	MSLS-3A	BC	JB 2-097	120+86.20	H1b	M
2-162	MSLS-3J	AB	JB 2-099	120+89.95	H1b	L
2-163	MSLS-3A	CA	JB 2-100	120+93.70	H1b	M

Caltrans Metric

DIST	COUNTY	ROUTE	KILOMETER POST TOTAL PROJECT	SHEET No	TOTAL SHEETS
04	SM	1			

Min Maung 9/30/05
REGISTERED ELECTRICAL ENGINEER

PLANS APPROVAL DATE

REGISTERED PROFESSIONAL ENGINEER MIN MAUNG No. E012210 Exp. 09/30/06 ELECT STATE OF CALIFORNIA

The State of California or its officers or agents shall not be responsible for the accuracy or completeness of electronic copies of this plan sheet.

HNTB *Corporation*
200 E. SANDPOINTE AVENUE, SUITE 200
SANTA ANA, CALIFORNIA 92707

Caltrans now has a web site! To get to the web site, go to: http://www.dot.ca.gov

REVISED BY	DATE	DATE REVISED

CALCULATED/DESIGNED BY: A. GOROVAYA
CHECKED BY: M. MAUNG
DESIGN OVERSIGHT: BEHZAD GOLEMOHAMMADI

STATE OF CALIFORNIA - DEPARTMENT OF TRANSPORTATION
Caltrans
ELECTRICAL

ALL DIMENSIONS ARE IN MILLIMETERS UNLESS OTHERWISE SHOWN

TUNNEL LIGHTING FIXTURE SCHEDULE NO. 4

E9.5

PS&E SUBMITTAL (11/18/05)
NOT FOR CONSTRUCTION

LAST REVISION 00-00-00
DATE PLOTTED => 09-NOV-2005
TIME PLOTTED => 15:12

RELATIVE BORDER SCALE IS IN MILLIMETERS 0 20 40 60 80

USERNAME => lGraham
DGN FILE => 41123uza136.dgn

CU 04240

EA 1123U1

DAYTIME LIGHT FIXTURES
ROW 2 (CONT)

FIXTURE NO.	CIRCUIT NO.	PHASE	FROM JB NO.	ROADWAY STATION	FIXTURE TYPE	FUNCTION GROUP
2-164	MSLE-2E	AB	JB 2-101	120+97.50	H2	24 HR
2-165	MSLS-3A	AB	JB 2-102	121+01.75	H2	M
2-166	MSLE-2E	BC	JB 2-103	121+06.00	H2	24 HR
2-167	MSLS-3A	BC	JB 2-104	121+10.25	H2	M
2-168	MSLE-2E	CA	JB 2-105	121+14.50	H2	24 HR
2-169	MSLS-3A	CA	JB 2-106	121+18.75	H2	M
2-170	MSLE-2E	AB	JB 2-107	121+23.00	H2	24 HR
2-171	MSLS-3A	AB	JB 2-108	121+27.25	H2	M
2-172	MSLE-2E	BC	JB 2-109	121+31.50	H2	24 HR
2-173	MSLE-2E	CA	JB 2-110	121+40.00	H2	24 HR
2-174	MSLE-2E	AB	JB 2-111	121+48.50	H2	24 HR
2-175	MSLE-2E	BC	JB 2-112	121+57.00	H2	24 HR
2-176	MSLE-2E	CA	JB 2-113	121+65.50	H2	24 HR
2-177	MSLE-2E	AB	JB 2-114	121+74.00	H2	24 HR
2-178	MSLE-2E	BC	JB 2-115	121+82.50	H2	24 HR
2-179	MSLE-2E	CA	JB 2-116	121+91.00	H2	24 HR
2-180	MSLE-2E	AB	JB 2-117	121+99.50	H2	24 HR
2-181	MSLE-2E	BC	JB 2-118	122+08.00	H2	24 HR
2-182	MSLE-2E	CA	JB 2-119	122+16.50	H2	24 HR
2-183	MSLE-2E	AB	JB 2-120	122+25.00	H2	24 HR
2-184	MSLE-2E	BC	JB 2-121	122+33.50	H2	24 HR
2-185	MSLE-2E	CA	JB 2-122	122+42.00	H2	24 HR
2-186	MSLE-2E	AB	JB 2-123	122+50.50	H2	24 HR
2-187	MSLE-2E	BC	JB 2-124	122+59.00	H2	24 HR
2-188	MSLE-2E	CA	JB 2-125	122+67.50	H2	24 HR
2-189	MSLE-2E	AB	JB 2-126	122+76.00	H2	24 HR
2-190	MSLE-2E	BC	JB 2-127	122+84.50	H2	24 HR
2-191	MSLE-2E	CA	JB 2-128	122+93.00	H2	24 HR
2-192	MSLE-2E	AB	JB 2-129	123+01.50	H2	24 HR
2-193	MSLE-2E	BC	JB 2-130	123+10.00	H2	24 HR
2-194	MSLE-2E	CA	JB 2-131	123+18.50	H2	24 HR
2-195	MSLE-2E	AB	JB 2-132	123+27.00	H2	24 HR
2-196	MSLE-2E	BC	JB 2-133	123+35.50	H2	24 HR
2-197	MSLE-2E	CA	JB 2-134	123+44.00	H2	24 HR
2-198	MSLE-2E	AB	JB 2-135	123+52.50	H2	24 HR
2-199	MSLE-2E	BC	JB 2-136	123+61.00	H2	24 HR
2-200	MSLE-2E	CA	JB 2-137	123+69.50	H2	24 HR
2-201	MSLE-2E	AB	JB 2-138	123+78.00	H2	24 HR
2-202	MSLE-2E	BC	JB 2-139	123+86.50	H2	24 HR
2-203	MSLE-2E	CA	JB 2-140	123+95.00	H2	24 HR
2-204	MSLE-2E	AB	JB 2-141	124+03.50	H2	24 HR
2-205	MSLE-2E	BC	JB 2-142	124+12.00	H2	24 HR
2-206	MSLE-2E	CA	JB 2-143	124+20.50	H2	24 HR
2-207	MSLE-2E	AB	JB 2-144	124+29.00	H2	24 HR
2-208	MSLE-2E	BC	JB 2-145	124+37.50	H2	24 HR
2-209	MSLE-2E	CA	JB 2-146	124+46.00	H2	24 HR
2-210	MSLE-2E	AB	JB 2-147	124+54.50	H2	24 HR
2-211	MSLE-2E	BC	JB 2-148	124+63.00	H2	24 HR
2-212	MSLE-2E	CA	JB 2-149	124+71.50	H2	24 HR
2-213	MSLE-2E	AB	JB 2-150	124+80.00	H2	24 HR
2-214	MSLE-2E	BC	JB 2-151	124+88.50	H2	24 HR
2-215	MSLE-2E	CA	JB 2-152	124+97.00	H2	24 HR
2-216	MSLE-2E	AB	JB 2-153	125+05.50	H2	24 HR
2-217	MSLE-2E	BC	JB 2-154	125+14.00	H2	24 HR
2-218	MSLE-2E	CA	JB 2-155	125+22.50	H2	24 HR
2-219	MNLE-2J	AB	JB 2-156	125+31.00	H2	24 HR
2-220	MNLE-2J	BC	JB 2-157	125+39.50	H2	24 HR
2-221	MNLE-2J	CA	JB 2-158	125+48.00	H2	24 HR
2-222	MNLE-2J	AB	JB 2-159	125+56.50	H2	24 HR

DAYTIME LIGHT FIXTURES
ROW 2 (CONT)

FIXTURE NO.	CIRCUIT NO.	PHASE	FROM JB NO.	ROADWAY STATION	FIXTURE TYPE	FUNCTION GROUP
2-223	MNLE-2J	BC	JB 2-160	125+65.00	H2	24 HR
2-224	MNLE-2J	CA	JB 2-161	125+73.50	H2	24 HR
2-225	MNLE-2J	AB	JB 2-162	125+82.00	H2	24 HR
2-226	MNLE-2J	BC	JB 2-163	125+90.50	H2	24 HR
2-227	MNLE-2J	CA	JB 2-164	125+99.00	H2	24 HR
2-228	MNLE-2J	AB	JB 2-165	126+07.50	H2	24 HR
2-229	MNLE-2J	BC	JB 2-166	126+16.00	H2	24 HR
2-230	MNLE-2J	CA	JB 2-167	126+24.50	H2	24 HR
2-231	MNLE-2J	AB	JB 2-168	126+33.00	H2	24 HR
2-232	MNLE-2J	BC	JB 2-169	126+41.50	H2	24 HR
2-233	MNLE-2J	CA	JB 2-170	126+50.00	H2	24 HR
2-234	MNLE-2J	AB	JB 2-171	126+58.50	H2	24 HR
2-235	MNLE-2J	BC	JB 2-172	126+67.00	H2	24 HR
2-236	MNLE-2J	CA	JB 2-173	126+75.50	H2	24 HR
2-237	MNLE-2J	AB	JB 2-174	126+84.00	H2	24 HR
2-238	MNLE-2J	BC	JB 2-175	126+92.50	H2	24 HR
2-239	MNLE-2J	CA	JB 2-176	127+01.00	H2	24 HR
2-240	MNLE-2J	AB	JB 2-177	127+09.50	H2	24 HR
2-241	MNLE-2J	BC	JB 2-178	127+18.00	H2	24 HR
2-242	MNLE-2J	CA	JB 2-179	127+26.50	H2	24 HR
2-243	MNLE-2J	AB	JB 2-180	127+35.00	H2	24 HR
2-244	MNLE-2J	BC	JB 2-181	127+43.50	H2	24 HR
2-245	MNLE-2J	CA	JB 2-182	127+52.00	H2	24 HR
2-246	MNLE-2J	AB	JB 2-183	127+60.50	H2	24 HR
2-247	MNLE-2J	BC	JB 2-184	127+69.00	H2	24 HR
2-248	MNLE-2J	CA	JB 2-185	127+77.50	H2	24 HR
2-249	MNLE-2J	AB	JB 2-186	127+86.00	H2	24 HR
2-250	MNLE-2J	BC	JB 2-187	127+94.50	H2	24 HR
2-251	MNLE-2J	CA	JB 2-188	128+03.00	H2	24 HR
2-252	MNLE-2J	AB	JB 2-189	128+11.50	H2	24 HR
2-253	MNLE-2J	BC	JB 2-190	128+20.00	H2	24 HR
2-254	MNLE-2J	CA	JB 2-191	128+28.50	H2	24 HR
2-255	MNLE-2J	AB	JB 2-192	128+37.00	H2	24 HR
2-256	MNLE-2J	BC	JB 2-193	128+45.50	H2	24 HR
2-257	MNLE-2J	CA	JB 2-194	128+54.00	H2	24 HR
2-258	MNLE-2J	AB	JB 2-195	128+62.50	H2	24 HR
2-259	MNLE-2J	BC	JB 2-196	128+71.00	H2	24 HR
2-260	MNLE-2J	CA	JB 2-197	128+79.50	H2	24 HR
2-261	MNLE-2J	AB	JB 2-198	128+88.00	H2	24 HR
2-262	MNLE-2J	BC	JB 2-199	128+96.50	H2	24 HR
2-263	MNLE-2J	CA	JB 2-200	129+05.00	H2	24 HR
2-264	MNLE-2J	AB	JB 2-201	129+13.50	H2	24 HR
2-265	MNLE-2J	BC	JB 2-202	129+22.00	H2	24 HR
2-266	MNLE-2J	CA	JB 2-203	129+30.50	H2	24 HR
2-267	MNLE-2J	AB	JB 2-204	129+39.00	H2	24 HR
2-268	MNLE-2J	BC	JB 2-205	129+47.50	H2	24 HR
2-269	MNLE-2J	CA	JB 2-206	129+56.00	H2	24 HR
2-270	MNLE-2J	AB	JB 2-207	129+64.50	H2	24 HR
2-271	MNLE-2J	BC	JB 2-208	129+73.00	H2	24 HR
2-272	MNLE-2J	CA	JB 2-209	129+81.50	H2	24 HR
2-273	MNLE-2J	AB	JB 2-210	129+90.00	H2	24 HR
2-274	MNLE-2J	BC	JB 2-211	129+98.50	H2	24 HR
2-275	MNLE-2J	CA	JB 2-212	130+07.00	H2	24 HR
2-276	MNLE-2J	AB	JB 2-213	130+15.50	H2	24 HR
2-277	MNLE-2J	BC	JB 2-214	130+24.00	H2	24 HR
2-278	MNLE-2J	CA	JB 2-215	130+32.50	H2	24 HR
2-279	MNLE-2J	AB	JB 2-216	130+41.00	H2	24 HR
2-280	MNLE-2J	BC	JB 2-217	130+49.50	H2	24 HR
2-281	MNLE-2J	CA	JB 2-218	130+58.00	H2	24 HR

Caltrans Metric

DIST	COUNTY	ROUTE	KILOMETER POST TOTAL PROJECT	SHEET No	TOTAL SHEETS
04	SM	1			

Min Maung 9/30/05
REGISTERED ELECTRICAL ENGINEER

PLANS APPROVAL DATE

REGISTERED PROFESSIONAL ENGINEER MIN MAUNG No. E012210 Exp. 09/30/06 ELECT STATE OF CALIFORNIA

The State of California or its officers or agents shall not be responsible for the accuracy or completeness of electronic copies of this plan sheet.

HNTB *Corporation*
200 E. SANDPOINTE AVENUE, SUITE 200
SANTA ANA, CALIFORNIA 92707

Caltrans now has a web site! To get to the web site, go to: http://www.dot.ca.gov

ALL DIMENSIONS ARE IN MILLIMETERS UNLESS OTHERWISE SHOWN

TUNNEL LIGHTING FIXTURE SCHEDULE NO. 5

E9.6

PS&E SUBMITTAL (11/18/05)
NOT FOR CONSTRUCTION

REVISED BY	DATE	DATE REVISED
A. GOROVAYA	9/30/05	
M. MAUNG		

CALCULATED/DESIGNED BY: A. GOROVAYA
CHECKED BY: M. MAUNG

DESIGN OVERSIGHT: BEHZAD GOLEMOHAMMADI

STATE OF CALIFORNIA - DEPARTMENT OF TRANSPORTATION
Caltrans
ELECTRICAL

LAST REVISION 00-00-00 | DATE PLOTTED => 09-NOV-2005 | TIME PLOTTED => 15:12

RELATIVE BORDER SCALE IS IN MILLIMETERS 0 20 40 60 80

USERNAME => lGraham
DGN FILE => 41123uza137.dgn

CU 04240

EA 1123U1

DAYTIME LIGHT FIXTURES ROW 2 (CONT)

FIXTURE NO.	CIRCUIT NO.	PHASE	FROM JB NO.	ROADWAY STATION	FIXTURE TYPE	FUNCTION GROUP
2-282	MNLE-2J	AB	JB 2-219	130+66.50	H2	24 HR
2-283	MNLS-3A	AB	JB 2-220	130+70.75	H2	M
2-284	MNLE-2J	BC	JB 2-221	130+75.00	H2	24 HR
2-285	MNLS-3A	BC	JB 2-222	130+79.25	H2	M
2-286	MNLE-2J	CA	JB 2-223	130+83.50	H2	24 HR
2-287	MNLS-3A	CA	JB 2-224	130+87.40	H2	M
2-288	MNLE-2J	AB	JB 2-225	130+91.30	H2	24 HR
2-289	MNLS-3A	AB	JB 2-226	130+95.20	H2	M
2-290	MNLE-2J	BC	JB 2-227	130+99.10	H2	24 HR
2-291	MNLS-3A	BC	JB 2-228	131+03.00	H2	M
2-292	MNLE-2J	CA	JB 2-229	131+06.90	H2	24 HR
2-293	MNLS-3A	CA	JB 2-230	131+10.80	H2	M
2-294	MNLE-2J	AB	JB 2-231	131+15.60	H2	24 HR
2-295	MNLS-3A	AB	JB 2-232	131+18.90	H2	M
2-296	MNLE-2J	BC	JB 2-233	131+22.20	H2	24 HR
2-297	MNLS-3A	BC	JB 2-234	131+25.50	H2	M

DAYTIME LIGHT FIXTURES ROW 3

FIXTURE NO.	CIRCUIT NO.	PHASE	FROM JB NO.	ROADWAY STATION	FIXTURE TYPE	FUNCTION GROUP
3-001	NOT USED					
3-002	NOT USED					
3-003	MNLS-2A	AB	JB 3-001	131+24.05	H1b	M
3-004	MNLS-2A	BC	JB 3-001	131+23.15	H1b	M
3-005	MNLS-2A	CA	JB 3-001	131+22.25	H1b	M
3-006	MNLS-3E	AB	JB 3-002	131+21.35	H1b	L
3-007	MNLS-2A	AB	JB 3-004	131+19.55	H1b	M
3-008	MNLS-3E	BC	JB 3-005	131+18.65	H1b	L
3-009	MNLS-2A	BC	JB 3-004	131+17.75	H1b	M
3-010	MNLS-2A	CA	JB 3-004	131+16.85	H1b	M
3-011	MNLS-3E	CA	JB 3-005	131+15.95	H1b	L
3-012	MNLS-2A	AB	JB 3-007	131+15.05	H1b	M
3-013	MNLS-2A	BC	JB 3-007	131+14.15	H1b	M
3-014	MNLS-3E	AB	JB 3-005	131+13.25	H1b	L
3-015	MNLS-2A	CA	JB 3-007	131+11.45	H1b	M
3-016	MNLS-2A	AB	JB 3-007	131+10.55	H1b	M
3-017	MNLS-3E	BC	JB 3-008	131+09.05	H1b	L
3-018	MNLS-3E	CA	JB 3-008	131+07.55	H1b	L
3-019	MNLS-2A	BC	JB 3-010	131+06.05	H1b	M
3-020	MNLS-2A	CA	JB 3-010	131+05.15	H1b	M
3-021	MNLS-2A	AB	JB 3-010	131+03.35	H1b	M
3-022	MNLS-2A	BC	JB 3-010	131+02.45	H1b	M
3-023	MNLS-3E	AB	JB 3-011	131+00.95	H1b	L
3-024	MNLS-3E	BC	JB 3-011	130+99.45	H1b	L
3-025	MNLS-2A	CA	JB 3-013	130+97.95	H1b	M
3-026	MNLS-2A	AB	JB 3-013	130+97.05	H1b	M
3-027	MNLS-2A	BC	JB 3-013	130+95.25	H1b	M
3-028	MNLS-2A	CA	JB 3-013	130+94.35	H1b	M
3-029	MNLS-3E	CA	JB 3-014	130+92.85	H1b	L
3-030	MNLS-3E	AB	JB 3-014	130+91.35	H1b	L
3-031	MNLS-2A	AB	JB 3-016	130+89.85	H1b	M
3-032	MNLS-2A	BC	JB 3-016	130+88.95	H1b	M
3-033	MNLS-2A	CA	JB 3-016	130+87.15	H1b	M

DAYTIME LIGHT FIXTURES ROW 3 (CONT)

FIXTURE NO.	CIRCUIT NO.	PHASE	FROM JB NO.	ROADWAY STATION	FIXTURE TYPE	FUNCTION GROUP
3-034	MNLS-2A	AB	JB 3-016	130+86.25	H1b	M
3-035	MNLS-3E	BC	JB 3-017	130+84.75	H1b	L
3-036	MNLS-3E	CA	JB 3-017	130+83.25	H1b	L
3-037	MNLS-2A	BC	JB 3-019	130+81.85	H1b	M
3-038	MNLS-2A	CA	JB 3-019	130+80.85	H1b	M
3-039	MNLS-2A	AB	JB 3-019	130+79.05	H1b	M
3-040	MNLS-2A	BC	JB 3-019	130+78.15	H1b	M
3-041	MNLS-3E	AB	JB 3-020	130+76.65	H1b	L
3-042	MNLS-3E	BC	JB 3-020	130+75.15	H1b	L
3-043	MNLS-2A	CA	JB 3-022	130+73.65	H1b	M
3-044	MNLS-2A	AB	JB 3-022	130+72.75	H1b	M
3-045	MNLS-2A	BC	JB 3-022	130+70.95	H1b	M
3-046	MNLS-2A	CA	JB 3-022	130+70.05	H1b	M
3-047	MNLS-3E	CA	JB 3-023	130+68.55	H1b	L
3-048	MNLS-3E	AB	JB 3-023	130+67.05	H1b	L
3-049	MNLS-2A	AB	JB 3-025	130+65.55	H1b	M
3-050	MNLS-2A	BC	JB 3-025	130+64.65	H1b	M
3-051	MNLS-2A	CA	JB 3-025	130+62.85	H1b	M
3-052	MNLS-2A	AB	JB 3-025	130+61.95	H1b	M
3-053	MNLS-3E	BC	JB 3-026	130+60.45	H1b	L
3-054	MNLS-3E	CA	JB 3-026	130+58.95	H1b	L
3-055	MNLS-2A	BC	JB 3-028	130+57.45	H1b	M
3-056	MNLS-2A	CA	JB 3-028	130+56.55	H1b	M
3-057	MNLS-2A	AB	JB 3-028	130+54.75	H1b	M
3-058	MNLS-2A	BC	JB 3-028	130+53.85	H1b	M
3-059	MNLS-3E	AB	JB 3-029	130+52.35	H1b	L
3-060	MNLS-3E	BC	JB 3-029	130+50.85	H1b	L
3-061	MNLS-2A	CA	JB 3-031	130+49.35	H1b	M
3-062	MNLS-2A	AB	JB 3-031	130+48.45	H1b	M
3-063	MNLS-2A	BC	JB 3-031	130+46.65	H1b	M
3-064	MNLS-2A	CA	JB 3-031	130+45.75	H1b	M
3-065	MNLS-3E	CA	JB 3-032	130+44.25	H1b	L
3-066	MNLS-3E	AB	JB 3-032	130+42.75	H1b	L
3-067	MNLS-2A	AB	JB 3-034	130+41.25	H1b	M
3-068	MNLS-2A	BC	JB 3-034	130+40.35	H1b	M
3-069	MNLS-2A	CA	JB 3-034	130+38.55	H1b	M
3-070	MNLS-2A	AB	JB 3-034	130+37.65	H1b	M
3-071	MNLS-3E	BC	JB 3-035	130+36.15	H1b	L
3-072	MNLS-3E	CA	JB 3-035	130+34.65	H1b	L
3-073	MNLS-2A	BC	JB 3-037	130+33.15	H1b	M
3-074	MNLS-2A	CA	JB 3-037	130+32.25	H1b	M
3-075	MNLS-2A	AB	JB 3-037	130+30.45	H1b	M
3-076	MNLS-2A	BC	JB 3-037	130+29.55	H1b	M
3-077	MNLS-3E	AB	JB 3-038	130+28.05	H1b	L
3-078	MNLS-3E	BC	JB 3-038	130+26.55	H1b	L
3-079	MNLS-2A	CA	JB 3-040	130+25.05	H1b	M
3-080	MNLS-2A	AB	JB 3-040	130+24.15	H1b	M
3-081	MNLS-2A	BC	JB 3-040	130+22.35	H1b	M
3-082	MNLS-2A	CA	JB 3-040	130+21.45	H1b	M
3-083	MNLS-3E	CA	JB 3-041	130+19.95	H1b	L
3-084	MNLS-3E	AB	JB 3-041	130+18.45	H1b	L
3-085	MNLS-2A	AB	JB 3-043	130+16.95	H1b	M
3-086	MNLS-2A	BC	JB 3-043	130+16.05	H1b	M
3-087	MNLS-2A	CA	JB 3-043	130+14.25	H1b	M
3-088	MNLS-2A	AB	JB 3-043	130+13.35	H1b	M
3-089	MNLS-3E	BC	JB 3-044	130+11.85	H1b	L
3-090	MNLS-3E	CA	JB 3-044	130+10.35	H1b	L
3-091	MNLS-2E	BC	JB 3-046	130+08.85	H1b	M
3-092	MNLS-2E	CA	JB 3-046	130+07.95	H1b	M

PS&E SUBMITTAL (11/18/05)
NOT FOR CONSTRUCTION

ALL DIMENSIONS ARE IN MILLIMETERS UNLESS OTHERWISE SHOWN

TUNNEL LIGHTING FIXTURE SCHEDULE NO. 6

E9.7

DIST	COUNTY	ROUTE	KILOMETER POST TOTAL PROJECT	SHEET No	TOTAL SHEETS
04	SM	1			

Min Maung 9/30/05
REGISTERED ELECTRICAL ENGINEER

PLANS APPROVAL DATE

REGISTERED PROFESSIONAL ENGINEER MIN MAUNG No. E012210 Exp. 09/30/06 ELECT STATE OF CALIFORNIA

The State of California or its officers or agents shall not be responsible for the accuracy or completeness of electronic copies of this plan sheet.

HNTB *Corporation*
200 E. SANDPOINTE AVENUE, SUITE 200
SANTA ANA, CALIFORNIA 92707

Caltrans now has a web site! To get to the web site, go to: http://www.dot.ca.gov

STATE OF CALIFORNIA - DEPARTMENT OF TRANSPORTATION
Caltrans
ELECTRICAL

DESIGN OVERSIGHT: BEHZAD GOLEMOHAMMADI
CALCULATED/DESIGNED BY: A. GOROVAYA
CHECKED BY: M. MAUNG
REVISED BY: DATE REVISED
DATE: 9/30/05

LAST REVISION 00-00-00
DATE PLOTTED => 09-NOV-2005
TIME PLOTTED => 15:12

RELATIVE BORDER SCALE IS IN MILLIMETERS 0 20 40 60 80
USERNAME => lGraham
DGN FILE => 41123uza138.dgn
CU 04240
EA 1123U1

DAYTIME LIGHT FIXTURES
ROW 3 (CONT)

FIXTURE NO.	CIRCUIT NO.	PHASE	FROM JB NO.	ROADWAY STATION	FIXTURE TYPE	FUNCTION GROUP
3-093	MNLS-2E	AB	JB 3-046	130+06.15	H1b	M
3-094	MNLS-2E	BC	JB 3-046	130+05.25	H1b	M
3-095	MNLS-3E	AB	JB 3-047	130+03.75	H1b	L
3-096	MNLS-3E	BC	JB 3-047	130+02.25	H1b	L
3-097	MNLS-2E	CA	JB 3-049	130+00.75	H1b	M
3-098	MNLS-2E	AB	JB 3-049	129+99.85	H1b	M
3-099	MNLS-2E	BC	JB 3-049	129+98.05	H1b	M
3-100	MNLS-2E	CA	JB 3-049	129+97.15	H1b	M
3-101	MNLS-3E	CA	JB 3-050	129+95.65	H1b	L
3-102	MNLS-3E	AB	JB 3-050	129+94.15	H1b	L
3-103	MNLS-2E	AB	JB 3-052	129+92.65	H1b	M
3-104	MNLS-2E	BC	JB 3-052	129+91.75	H1b	M
3-105	MNLS-2E	CA	JB 3-052	129+89.95	H1b	M
3-106	MNLS-2E	AB	JB 3-052	129+88.85	H1b	M
3-107	MNLS-3E	BC	JB 3-053	129+87.55	H1b	L
3-108	MNLS-2E	BC	JB 3-054	129+86.15	H1b	M
3-109	MNLS-2E	CA	JB 3-054	129+84.75	H1b	M
3-110	MNLS-3E	CA	JB 3-053	129+83.35	H1b	L
3-111	MNLS-2E	AB	JB 3-056	129+81.75	H1b	M
3-112	MNLS-2E	BC	JB 3-056	129+80.35	H1b	M
3-113	MNLS-3E	AB	JB 3-057	129+78.95	H1b	L
3-114	MNLS-2E	CA	JB 3-056	129+77.55	H1b	M
3-115	MNLS-2E	AB	JB 3-056	129+76.15	H1b	M
3-116	MNLS-3E	BC	JB 3-057	129+74.85	H1b	L
3-117	MNLS-2E	BC	JB 3-059	129+73.25	H1b	M
3-118	MNLS-2E	CA	JB 3-059	129+71.85	H1b	M
3-119	MNLS-3E	CA	JB 3-060	129+70.45	H1b	L
3-120	MNLS-2E	AB	JB 3-059	129+69.05	H1b	M
3-121	MNLS-2E	BC	JB 3-059	129+67.65	H1b	M
3-122	MNLS-3E	AB	JB 3-060	129+66.35	H1b	L
3-123	MNLS-2E	CA	JB 3-062	129+64.75	H1b	M
3-124	MNLS-2E	AB	JB 3-062	129+63.35	H1b	M
3-125	MNLS-3E	BC	JB 3-063	129+61.95	H1b	L
3-126	MNLS-2E	BC	JB 3-062	129+60.55	H1b	M
3-127	MNLS-2E	CA	JB 3-062	129+59.15	H1b	M
3-128	MNLS-3E	CA	JB 3-063	129+57.85	H1b	L
3-129	MNLS-2E	AB	JB 3-065	129+56.25	H1b	M
3-130	MNLS-2E	BC	JB 3-065	129+54.85	H1b	M
3-131	MNLS-3E	AB	JB 3-066	129+53.45	H1b	L
3-132	MNLS-2E	CA	JB 3-065	129+52.05	H1b	M
3-133	MNLS-2E	AB	JB 3-065	129+50.65	H1b	M
3-134	MNLS-3E	BC	JB 3-066	129+49.35	H1b	L
3-135	MNLS-2E	BC	JB 3-068	129+47.75	H1b	M
3-136	MNLS-2E	CA	JB 3-068	129+46.35	H1b	M
3-137	MNLS-3E	CA	JB 3-069	129+44.95	H1b	L
3-138	MNLS-2E	AB	JB 3-068	129+43.55	H1b	M
3-139	MNLS-2E	BC	JB 3-068	129+42.15	H1b	M
3-140	MNLS-3E	AB	JB 3-069	129+40.85	H1b	L
3-141	MNLS-2E	CA	JB 3-071	129+38.95	H1b	M
3-142	MNLS-2E	AB	JB 3-071	129+37.05	H1b	M
3-143	MNLS-3E	BC	JB 3-072	129+35.15	H1b	L
3-144	MNLS-2E	BC	JB 3-074	129+33.25	H1b	M
3-145	MNLS-2E	CA	JB 3-074	129+30.95	H1b	M
3-146	MNLS-3E	CA	JB 3-075	129+29.05	H1b	L
3-147	MNLS-2E	AB	JB 3-076	129+27.15	H1b	M
3-148	MNLS-2E	BC	JB 3-076	129+25.25	H1b	M
3-149	MNLS-3E	AB	JB 3-078	129+22.65	H1b	L
3-150	MNLS-2E	CA	JB 3-079	129+20.75	H1b	M
3-151	MNLS-2E	AB	JB 3-079	129+18.85	H1b	M

DAYTIME LIGHT FIXTURES
ROW 3 (CONT)

FIXTURE NO.	CIRCUIT NO.	PHASE	FROM JB NO.	ROADWAY STATION	FIXTURE TYPE	FUNCTION GROUP
3-152	MNLS-3E	BC	JB 3-080	129+16.95	H1b	L
3-153	MNLS-2E	BC	JB 3-082	129+14.35	H1b	M
3-154	MNLS-2E	CA	JB 3-082	129+12.45	H1b	M
3-155	MNLS-3E	CA	JB 3-083	129+10.55	H1b	L
3-156	MNLS-2E	AB	JB 3-084	129+08.65	H1b	M
3-157	MNLS-2E	BC	JB 3-084	129+06.05	H1b	M
3-158	MNLS-3E	AB	JB 3-086	129+04.15	H1b	L
3-159	MNLS-2E	CA	JB 3-087	129+02.25	H1b	M
3-160	MNLS-2E	AB	JB 3-087	129+00.35	H1b	M
3-161	MNLS-3E	BC	JB 3-089	128+97.75	H1b	L
3-162	MNLS-2E	BC	JB 3-090	128+95.85	H1b	M
3-163	MNLS-2E	CA	JB 3-090	128+93.95	H1b	M
3-164	MNLS-3E	CA	JB 3-091	128+92.05	H1b	L
3-165	MNLS-2E	AB	JB 3-093	128+89.45	H1b	M
3-166	MNLS-2E	BC	JB 3-093	128+87.15	H1b	M
3-167	MNLS-3E	AB	JB 3-094	128+84.75	H1b	L
3-168	MNLS-2E	CA	JB 3-095	128+82.35	H1b	M
3-169	MNLS-3E	BC	JB 3-097	128+78.60	H1b	L
3-170	MNLS-2E	AB	JB 3-098	128+74.85	H1b	M
3-171	MNLS-3E	CA	JB 3-100	128+71.10	H1b	L
3-172	MNLS-2E	BC	JB 3-101	128+67.35	H1b	M
3-173	MNLS-3E	AB	JB 3-103	128+63.60	H1b	L
3-174	MNLS-2E	CA	JB 3-104	128+59.85	H1b	M
3-175	MNLE-2E	AB	JB 3-105	128+56.05	H2	24 HR
3-176	MNLS-2E	AB	JB 3-106	128+51.80	H2	M
3-177	MNLE-2E	BC	JB 3-107	128+47.55	H2	24 HR
3-178	MNLS-2E	BC	JB 3-108	128+43.30	H2	M
3-179	MNLE-2E	CA	JB 3-109	128+39.05	H2	24 HR
3-180	MNLS-2E	CA	JB 3-110	128+34.80	H2	M
3-181	MNLE-2E	AB	JB 3-111	128+30.55	H2	24 HR
3-182	MNLS-2E	AB	JB 3-112	128+26.30	H2	M
3-183	MNLE-2E	BC	JB 3-113	128+22.05	H2	24 HR
3-184	MNLE-2E	CA	JB 3-114	128+13.55	H2	24 HR
3-185	MNLE-2E	AB	JB 3-115	128+05.05	H2	24 HR
3-186	MNLE-2E	BC	JB 3-116	127+96.55	H2	24 HR
3-187	MNLE-2E	CA	JB 3-117	127+88.05	H2	24 HR
3-188	MNLE-2E	AB	JB 3-118	127+79.55	H2	24 HR
3-189	MNLE-2E	BC	JB 3-119	127+71.05	H2	24 HR
3-190	MNLE-2E	CA	JB 3-120	127+62.55	H2	24 HR
3-191	MNLE-2E	AB	JB 3-121	127+54.05	H2	24 HR
3-192	MNLE-2E	BC	JB 3-122	127+45.55	H2	24 HR
3-193	MNLE-2E	CA	JB 3-123	127+37.05	H2	24 HR
3-194	MNLE-2E	AB	JB 3-124	127+28.55	H2	24 HR
3-195	MNLE-2E	BC	JB 3-125	127+20.05	H2	24 HR
3-196	MNLE-2E	CA	JB 3-126	127+11.55	H2	24 HR
3-197	MNLE-2E	AB	JB 3-127	127+03.05	H2	24 HR
3-198	MNLE-2E	BC	JB 3-128	126+94.55	H2	24 HR
3-199	MNLE-2E	CA	JB 3-129	126+86.05	H2	24 HR
3-200	MNLE-2E	AB	JB 3-130	126+77.55	H2	24 HR
3-201	MNLE-2E	BC	JB 3-131	126+69.05	H2	24 HR
3-202	MNLE-2E	CA	JB 3-132	126+60.55	H2	24 HR
3-203	MNLE-2E	AB	JB 3-133	126+52.05	H2	24 HR
3-204	MNLE-2E	BC	JB 3-134	126+43.55	H2	24 HR
3-205	MNLE-2E	CA	JB 3-135	126+35.05	H2	24 HR
3-206	MNLE-2E	AB	JB 3-136	126+26.55	H2	24 HR
3-207	MNLE-2E	BC	JB 3-137	126+18.05	H2	24 HR
3-208	MNLE-2E	CA	JB 3-138	126+09.55	H2	24 HR
3-209	MNLE-2E	AB	JB 3-139	126+01.05	H2	24 HR
3-210	MNLE-2E	BC	JB 3-140	125+92.55	H2	24 HR

PS&E SUBMITTAL (11/18/05)
NOT FOR CONSTRUCTION

Caltrans Metric

DIST	COUNTY	ROUTE	KILOMETER POST TOTAL PROJECT	SHEET No	TOTAL SHEETS
04	SM	1			

Min Maung 9/30/05
REGISTERED ELECTRICAL ENGINEER

PLANS APPROVAL DATE

REGISTERED PROFESSIONAL ENGINEER MIN MAUNG No. E012210 Exp. 09/30/06 ELECT STATE OF CALIFORNIA

The State of California or its officers or agents shall not be responsible for the accuracy or completeness of electronic copies of this plan sheet.

HNTB *Corporation*
200 E. SANDPOINTE AVENUE, SUITE 200
SANTA ANA, CALIFORNIA 92707

Caltrans now has a web site! To get to the web site, go to: http://www.dot.ca.gov

ALL DIMENSIONS ARE IN MILLIMETERS UNLESS OTHERWISE SHOWN

TUNNEL LIGHTING FIXTURE SCHEDULE NO. 7

E9.8

REVISED BY	DATE	DATE REVISED

CALCULATED/DESIGNED BY: A. GOROVAYA
CHECKED BY: M. MAUNG
DESIGN OVERSIGHT: BEHZAD GOLEMOHAMMADI

STATE OF CALIFORNIA - DEPARTMENT OF TRANSPORTATION
Caltrans
ELECTRICAL

LAST REVISION 00-00-00
DATE PLOTTED => 09-NOV-2005
TIME PLOTTED => 15:12

RELATIVE BORDER SCALE IS IN MILLIMETERS 0 20 40 60 80

USERNAME => lGraham
DGN FILE => 41123uza139.dgn

CU 04240
EA 1123U1

DAYTIME LIGHT FIXTURES
ROW 3 (CONT)

FIXTURE NO.	CIRCUIT NO.	PHASE	FROM JB NO.	ROADWAY STATION	FIXTURE TYPE	FUNCTION GROUP
3-211	MNLE-2E	CA	JB 3-141	125+84.05	H2	24 HR
3-212	MNLE-2E	AB	JB 3-142	125+75.55	H2	24 HR
3-213	MNLE-2E	BC	JB 3-143	125+67.05	H2	24 HR
3-214	MNLE-2E	CA	JB 3-144	125+58.55	H2	24 HR
3-215	MNLE-2E	AB	JB 3-145	125+50.05	H2	24 HR
3-216	MNLE-2E	BC	JB 3-146	125+41.55	H2	24 HR
3-217	MNLE-2E	CA	JB 3-147	125+33.05	H2	24 HR
3-218	MNLE-2E	AB	JB 3-148	125+24.55	H2	24 HR
3-219	MNLE-2E	BC	JB 3-149	125+16.05	H2	24 HR
3-220	MNLE-2E	CA	JB 3-150	125+07.55	H2	24 HR
3-221	MNLE-2E	AB	JB 3-151	124+99.05	H2	24 HR
3-222	MNLE-2E	BC	JB 3-152	124+90.55	H2	24 HR
3-223	MNLE-2E	CA	JB 3-153	124+82.05	H2	24 HR
3-224	MNLE-2E	AB	JB 3-154	124+73.55	H2	24 HR
3-225	MNLE-2E	BC	JB 3-155	124+65.05	H2	24 HR
3-226	MNLE-2E	CA	JB 3-156	124+56.55	H2	24 HR
3-227	MNLE-2E	AB	JB 3-157	124+48.05	H2	24 HR
3-228	MNLE-2E	BC	JB 3-158	124+39.55	H2	24 HR
3-229	MNLE-2E	CA	JB 3-159	124+31.05	H2	24 HR
3-230	MSLE-2J	AB	JB 3-160	124+22.55	H2	24 HR
3-231	MSLE-2J	BC	JB 3-161	124+14.05	H2	24 HR
3-232	MSLE-2J	CA	JB 3-162	124+05.55	H2	24 HR
3-233	MSLE-2J	AB	JB 3-163	123+97.05	H2	24 HR
3-234	MSLE-2J	BC	JB 3-164	123+88.55	H2	24 HR
3-235	MSLE-2J	CA	JB 3-165	123+80.05	H2	24 HR
3-236	MSLE-2J	AB	JB 3-166	123+71.55	H2	24 HR
3-237	MSLE-2J	BC	JB 3-167	123+63.05	H2	24 HR
3-238	MSLE-2J	CA	JB 3-168	123+54.55	H2	24 HR
3-239	MSLE-2J	AB	JB 3-169	123+46.05	H2	24 HR
3-240	MSLE-2J	BC	JB 3-170	123+37.55	H2	24 HR
3-241	MSLE-2J	CA	JB 3-171	123+29.05	H2	24 HR
3-242	MSLE-2J	AB	JB 3-172	123+20.55	H2	24 HR
3-243	MSLE-2J	BC	JB 3-173	123+12.05	H2	24 HR
3-244	MSLE-2J	CA	JB 3-174	123+03.55	H2	24 HR
3-245	MSLE-2J	AB	JB 3-175	122+95.05	H2	24 HR
3-246	MSLE-2J	BC	JB 3-176	122+86.55	H2	24 HR
3-247	MSLE-2J	CA	JB 3-177	122+78.05	H2	24 HR
3-248	MSLE-2J	AB	JB 3-178	122+69.55	H2	24 HR
3-249	MSLE-2J	BC	JB 3-179	122+61.05	H2	24 HR
3-250	MSLE-2J	CA	JB 3-180	122+52.55	H2	24 HR
3-251	MSLE-2J	AB	JB 3-181	122+44.05	H2	24 HR
3-252	MSLE-2J	BC	JB 3-182	122+35.55	H2	24 HR
3-253	MSLE-2J	CA	JB 3-183	122+27.05	H2	24 HR
3-254	MSLE-2J	AB	JB 3-184	122+18.55	H2	24 HR
3-255	MSLE-2J	BC	JB 3-185	122+10.05	H2	24 HR
3-256	MSLE-2J	CA	JB 3-186	122+01.55	H2	24 HR
3-257	MSLE-2J	AB	JB 3-187	121+93.05	H2	24 HR
3-258	MSLE-2J	BC	JB 3-188	121+84.55	H2	24 HR
3-259	MSLE-2J	CA	JB 3-189	121+76.05	H2	24 HR
3-260	MSLE-2J	AB	JB 3-190	121+67.55	H2	24 HR
3-261	MSLE-2J	BC	JB 3-191	121+59.05	H2	24 HR
3-262	MSLE-2J	CA	JB 3-192	121+50.55	H2	24 HR
3-263	MSLE-2J	AB	JB 3-193	121+42.05	H2	24 HR
3-264	MSLE-2J	BC	JB 3-194	121+33.55	H2	24 HR
3-265	MSLE-2J	CA	JB 3-195	121+25.05	H2	24 HR
3-266	MSLE-2J	AB	JB 3-196	121+16.55	H2	24 HR
3-267	MSLE-2J	BC	JB 3-197	121+08.05	H2	24 HR
3-268	MSLE-2J	CA	JB 3-198	120+99.55	H2	24 HR
3-269	MSLE-2J	AB	JB 3-199	120+91.05	H2	24 HR

DAYTIME LIGHT FIXTURES
ROW 3 (CONT)

FIXTURE NO.	CIRCUIT NO.	PHASE	FROM JB NO.	ROADWAY STATION	FIXTURE TYPE	FUNCTION GROUP
3-270	MSLE-2J	BC	JB 3-200	120+82.55	H2	24 HR
3-271	MSLE-2J	CA	JB 3-201	120+74.05	H2	24 HR
3-272	MSLE-2J	AB	JB 3-202	120+65.55	H2	24 HR
3-273	MSLE-2J	BC	JB 3-203	120+57.05	H2	24 HR
3-274	MSLE-2J	CA	JB 3-204	120+48.55	H2	24 HR
3-275	MSLE-2J	AB	JB 3-205	120+40.05	H2	24 HR
3-276	MSLE-2J	BC	JB 3-206	120+31.55	H2	24 HR
3-277	MSLE-2J	CA	JB 3-207	120+23.05	H2	24 HR
3-278	MSLE-2J	AB	JB 3-208	120+14.55	H2	24 HR
3-279	MSLE-2J	BC	JB 3-209	120+06.05	H2	24 HR
3-280	MSLE-2J	CA	JB 3-210	119+97.55	H2	24 HR
3-281	MSLE-2J	AB	JB 3-211	119+89.05	H2	24 HR
3-282	MSLE-2J	BC	JB 3-212	119+80.55	H2	24 HR
3-283	MSLE-2J	CA	JB 3-213	119+72.05	H2	24 HR
3-284	MSLE-2J	AB	JB 3-214	119+63.55	H2	24 HR
3-285	MSLE-2J	BC	JB 3-215	119+55.05	H2	24 HR
3-286	MSLE-2J	CA	JB 3-216	119+46.55	H2	24 HR
3-287	MSLE-2J	AB	JB 3-217	119+38.05	H2	24 HR
3-288	MSLE-2J	BC	JB 3-218	119+29.55	H2	24 HR
3-289	MSLE-2J	CA	JB 3-219	119+21.05	H2	24 HR
3-290	MSLE-2J	AB	JB 3-220	119+14.05	H2	24 HR
3-291	MSLE-2J	BC	JB 3-221	119+07.05	H2	24 HR
3-292	MSLS-2E	AB	JB 3-222	119+02.80	H2	M
3-293	MSLE-2J	CA	JB 3-223	118+98.55	H2	24 HR
3-294	MSLS-2E	BC	JB 3-224	118+94.30	H2	M
3-295	MSLE-2J	AB	JB 3-225	118+90.05	H2	24 HR
3-296	MSLS-2E	CA	JB 3-226	118+85.80	H2	M
3-297	MSLE-2J	BC	JB 3-227	118+81.55	H2	24 HR
3-298	MSLS-2E	AB	JB 3-228	118+77.30	H2	M
3-299	MSLE-2J	CA	JB 3-229	118+73.05	H2	24 HR
3-300	MSLS-2E	BC	JB 3-230	118+68.80	H2	M
3-301	MSLE-2J	AB	JB 3-231	118+64.55	H2	24 HR
3-302	MSLS-2E	CA	JB 3-232	118+60.30	H2	M
3-303	MSLE-2J	BC	JB 3-233	118+56.05	H2	24 HR
3-304	MSLS-2E	AB	JB 3-234	118+52.75	H2	M
3-305	MSLE-2J	CA	JB 3-235	118+49.45	H2	24 HR
3-306	NOT USED					

DAYTIME LIGHT FIXTURES
ROW 4

FIXTURE NO.	CIRCUIT NO.	PHASE	FROM JB NO.	ROADWAY STATION	FIXTURE TYPE	FUNCTION GROUP
4-001	NOT USED					
4-002	MNLS-2J	BC	JB 4-003	131+14.15	H1a	M
4-003	MNLS-3J	AB	JB 4-001	131+13.25	H1a	L
4-004	MNLS-2J	CA	JB 4-003	131+11.45	H1a	M
4-005	MNLS-2J	AB	JB 4-003	131+10.55	H1a	M
4-006	MNLS-3J	BC	JB 4-004	131+09.05	H1a	L
4-007	MNLS-3J	CA	JB 4-004	131+07.55	H1a	L
4-008	MNLS-2J	BC	JB 4-006	131+06.05	H1a	M
4-009	MNLS-2J	CA	JB 4-006	131+05.15	H1a	M
4-010	MNLS-2J	AB	JB 4-006	131+03.35	H1a	M
4-011	MNLS-2J	BC	JB 4-006	131+02.45	H1a	M
4-012	MNLS-3J	AB	JB 4-007	131+00.95	H1a	L
4-013	MNLS-3J	BC	JB 4-007	130+99.45	H1a	L
4-014	MNLS-2J	CA	JB 4-009	130+97.95	H1a	M

PS&E SUBMITTAL (11/18/05)
NOT FOR CONSTRUCTION

Caltrans Metric

DIST	COUNTY	ROUTE	KILOMETER POST TOTAL PROJECT	SHEET No	TOTAL SHEETS
04	SM	1			

Min Maung 9/30/05
REGISTERED ELECTRICAL ENGINEER

PLANS APPROVAL DATE

REGISTERED PROFESSIONAL ENGINEER MIN MAUNG No. E012210 Exp. 09/30/06 ELECT STATE OF CALIFORNIA

The State of California or its officers or agents shall not be responsible for the accuracy or completeness of electronic copies of this plan sheet.

HNTB *Corporation*
200 E. SANDPOINTE AVENUE, SUITE 200
SANTA ANA, CALIFORNIA 92707

Caltrans now has a web site! To get to the web site, go to: http://www.dot.ca.gov

ALL DIMENSIONS ARE IN MILLIMETERS UNLESS OTHERWISE SHOWN

TUNNEL LIGHTING FIXTURE SCHEDULE NO. 8

E9.9

REVISED BY	DATE	DATE REVISED

CALCULATED/DESIGNED BY: A. GOROVAYA
CHECKED BY: M. MAUNG
DESIGN OVERSIGHT: BEHZAD GOLEMOHAMMADI

STATE OF CALIFORNIA - DEPARTMENT OF TRANSPORTATION
Caltrans
ELECTRICAL

LAST REVISION 00-00-00
DATE PLOTTED => 09-NOV-2005
TIME PLOTTED => 15:12

RELATIVE BORDER SCALE IS IN MILLIMETERS 0 20 40 60 80
USERNAME => lGraham
DGN FILE => 41123uza140.dgn
CU 04240
EA 1123U1

DAYTIME LIGHT FIXTURES
ROW 4 (CONT)

FIXTURE NO.	CIRCUIT NO.	PHASE	FROM JB NO.	ROADWAY STATION	FIXTURE TYPE	FUNCTION GROUP
4-015	MNLS-2J	AB	JB 4-009	130+97.05	H1a	M
4-016	MNLS-2J	BC	JB 4-009	130+95.25	H1a	M
4-017	MNLS-2J	CA	JB 4-009	130+94.35	H1a	M
4-018	MNLS-3J	CA	JB 4-010	130+92.85	H1a	L
4-019	MNLS-3J	AB	JB 4-010	130+91.35	H1a	L
4-020	MNLS-2J	AB	JB 4-012	130+89.85	H1a	M
4-021	MNLS-2J	BC	JB 4-012	130+88.95	H1a	M
4-022	MNLS-2J	CA	JB 4-012	130+87.15	H1a	M
4-023	MNLS-2J	AB	JB 4-012	130+86.25	H1a	M
4-024	MNLS-3J	BC	JB 4-013	130+84.75	H1a	L
4-025	MNLS-3J	CA	JB 4-013	130+83.25	H1a	L
4-026	MNLS-2J	BC	JB 4-015	130+81.75	H1a	M
4-027	MNLS-2J	CA	JB 4-015	130+80.85	H1a	M
4-028	MNLS-2J	AB	JB 4-015	130+79.05	H1a	M
4-029	MNLS-2J	BC	JB 4-015	130+78.15	H1a	M
4-030	MNLS-3J	AB	JB 4-016	130+76.65	H1a	L
4-031	MNLS-3J	BC	JB 4-016	130+75.15	H1a	L
4-032	MNLS-2J	CA	JB 4-018	130+73.65	H1a	M
4-033	MNLS-2J	AB	JB 4-018	130+72.75	H1a	M
4-034	MNLS-2J	BC	JB 4-018	130+70.95	H1a	M
4-035	MNLS-2J	CA	JB 4-018	130+70.05	H1a	M
4-036	MNLS-3J	CA	JB 4-019	130+68.55	H1a	L
4-037	MNLS-3J	AB	JB 4-019	130+67.05	H1a	L
4-038	MNLS-2J	AB	JB 4-021	130+65.55	H1a	M
4-039	MNLS-2J	BC	JB 4-021	130+64.65	H1a	M
4-040	MNLS-2J	CA	JB 4-021	130+62.85	H1a	M
4-041	MNLS-2J	AB	JB 4-021	130+61.95	H1a	M
4-042	MNLS-3J	BC	JB 4-022	130+60.45	H1a	L
4-043	MNLS-3J	CA	JB 4-022	130+58.95	H1a	L
4-044	MNLS-2J	BC	JB 4-024	130+57.45	H1a	M
4-045	MNLS-2J	CA	JB 4-024	130+56.55	H1a	M
4-046	MNLS-2J	AB	JB 4-024	130+54.75	H1a	M
4-047	MNLS-2J	BC	JB 4-024	130+53.85	H1a	M
4-048	MNLS-3J	AB	JB 4-025	130+52.35	H1a	L
4-049	MNLS-3J	BC	JB 4-025	130+50.85	H1a	L
4-050	MNLS-2J	CA	JB 4-027	130+49.35	H1a	M
4-051	MNLS-2J	AB	JB 4-027	130+48.45	H1a	M
4-052	MNLS-2J	BC	JB 4-027	130+46.65	H1a	M
4-053	MNLS-2J	CA	JB 4-027	130+45.75	H1a	M
4-054	MNLS-3J	CA	JB 4-028	130+44.25	H1a	L
4-055	MNLS-3J	AB	JB 4-028	130+42.75	H1a	L
4-056	MNLS-2J	AB	JB 4-030	130+41.25	H1a	M
4-057	MNLS-2J	BC	JB 4-030	130+40.35	H1a	M
4-058	MNLS-2J	CA	JB 4-030	130+38.55	H1a	M
4-059	MNLS-2J	AB	JB 4-030	130+37.65	H1a	M
4-060	MNLS-3J	BC	JB 4-031	130+36.15	H1a	L
4-061	MNLS-3J	CA	JB 4-031	130+34.65	H1a	L
4-062	MNLS-2J	BC	JB 4-033	130+33.15	H1a	M
4-063	MNLS-2J	CA	JB 4-033	130+32.25	H1a	M
4-064	MNLS-2J	AB	JB 4-033	130+30.45	H1a	M
4-065	MNLS-2J	BC	JB 4-033	130+29.55	H1a	M
4-066	MNLS-3J	AB	JB 4-034	130+28.05	H1a	L
4-067	MNLS-3J	BC	JB 4-034	130+26.55	H1a	L
4-068	MNLS-2J	CA	JB 4-036	130+25.05	H1a	M
4-069	MNLS-2J	AB	JB 4-036	130+24.15	H1a	M
4-070	MNLS-2J	BC	JB 4-036	130+22.35	H1a	M
4-071	MNLS-2J	CA	JB 4-036	130+21.45	H1a	M
4-072	MNLS-3J	CA	JB 4-037	130+19.95	H1a	L
4-073	MNLS-3J	AB	JB 4-037	130+18.45	H1a	L

DAYTIME LIGHT FIXTURES
ROW 4 (CONT)

FIXTURE NO.	CIRCUIT NO.	PHASE	FROM JB NO.	ROADWAY STATION	FIXTURE TYPE	FUNCTION GROUP
4-074	MNLS-2J	AB	JB 4-039	130+16.95	H1a	M
4-075	MNLS-2J	BC	JB 4-039	130+16.05	H1a	M
4-076	MNLS-2J	CA	JB 4-039	130+14.25	H1a	M
4-077	MNLS-2J	AB	JB 4-039	130+13.35	H1a	M
4-078	MNLS-3J	BC	JB 4-040	130+11.85	H1a	L
4-079	MNLS-3J	CA	JB 4-040	130+10.35	H1a	L
4-080	MNLS-3A	BC	JB 4-042	130+08.85	H1a	M
4-081	MNLS-3A	CA	JB 4-042	130+07.95	H1a	M
4-082	MNLS-3A	AB	JB 4-042	130+06.15	H1a	M
4-083	MNLS-3A	BC	JB 4-042	130+05.25	H1a	M
4-084	MNLS-3J	AB	JB 4-043	130+03.75	H1a	L
4-085	MNLS-3J	BC	JB 4-043	130+02.25	H1a	L
4-086	MNLS-3A	CA	JB 4-045	130+00.75	H1a	M
4-087	MNLS-3A	AB	JB 4-045	129+99.85	H1a	M
4-088	MNLS-3A	BC	JB 4-045	129+98.05	H1a	M
4-089	MNLS-3A	CA	JB 4-045	129+97.15	H1a	M
4-090	MNLS-3J	CA	JB 4-046	129+95.65	H1a	L
4-091	MNLS-3J	AB	JB 4-046	129+94.15	H1a	L
4-092	MNLS-3A	AB	JB 4-048	129+92.65	H1a	M
4-093	MNLS-3A	BC	JB 4-048	129+91.75	H1a	M
4-094	MNLS-3A	CA	JB 4-048	129+89.95	H1a	M
4-095	MNLS-3A	AB	JB 4-048	129+88.85	H1a	M
4-096	MNLS-3J	BC	JB 4-050	129+87.55	H1a	L
4-097	MNLS-3A	BC	JB 4-049	129+86.15	H1a	M
4-098	MNLS-3A	CA	JB 4-049	129+84.75	H1a	M
4-099	MNLS-3J	CA	JB 4-050	129+83.35	H1a	L
4-100	MNLS-3A	AB	JB 4-052	129+81.75	H1a	M
4-101	MNLS-3A	BC	JB 4-052	129+80.35	H1a	M
4-102	MNLS-3J	AB	JB 4-053	129+78.95	H1a	L
4-103	MNLS-3A	CA	JB 4-052	129+77.55	H1a	M
4-104	MNLS-3A	AB	JB 4-052	129+76.15	H1a	M
4-105	MNLS-3J	BC	JB 4-053	129+74.85	H1a	L
4-106	MNLS-3A	BC	JB 4-055	129+73.25	H1a	M
4-107	MNLS-3A	CA	JB 4-055	129+71.85	H1a	M
4-108	MNLS-3J	CA	JB 4-056	129+70.45	H1a	L
4-109	MNLS-3A	AB	JB 4-055	129+69.05	H1a	M
4-110	MNLS-3A	BC	JB 4-055	129+67.65	H1a	M
4-111	MNLS-3J	AB	JB 4-056	129+66.35	H1a	L
4-112	MNLS-3A	CA	JB 4-058	129+64.75	H1a	M
4-113	MNLS-3A	AB	JB 4-058	129+63.35	H1a	M
4-114	MNLS-3J	BC	JB 4-059	129+61.95	H1a	L
4-115	MNLS-3A	BC	JB 4-058	129+60.55	H1a	M
4-116	MNLS-3A	CA	JB 4-058	129+59.15	H1a	M
4-117	MNLS-3J	CA	JB 4-059	129+57.85	H1a	L
4-118	MNLS-3A	AB	JB 4-061	129+56.25	H1a	M
4-119	MNLS-3A	BC	JB 4-061	129+54.85	H1a	M
4-120	MNLS-3J	AB	JB 4-062	129+53.45	H1a	L
4-121	MNLS-3A	CA	JB 4-061	129+52.05	H1a	M
4-122	MNLS-3A	AB	JB 4-061	129+50.65	H1a	M
4-123	MNLS-3J	BC	JB 4-062	129+49.35	H1a	L
4-124	MNLS-3A	BC	JB 4-064	129+47.75	H1a	M
4-125	MNLS-3A	CA	JB 4-064	129+46.35	H1a	M
4-126	MNLS-3J	CA	JB 4-065	129+44.95	H1a	L
4-127	MNLS-3A	AB	JB 4-064	129+43.55	H1a	M
4-128	MNLS-3A	BC	JB 4-064	129+42.15	H1a	M
4-129	MNLS-3J	AB	JB 4-065	129+40.85	H1a	L
4-130	MNLS-3A	CA	JB 4-067	129+38.95	H1a	M
4-131	MNLS-3A	AB	JB 4-067	129+37.05	H1a	M
4-132	MNLS-3J	BC	JB 4-068	129+35.15	H1a	L

Caltrans Metric

DIST	COUNTY	ROUTE	KILOMETER POST TOTAL PROJECT	SHEET No	TOTAL SHEETS
04	SM	1			

Min Maung 9/30/05
REGISTERED ELECTRICAL ENGINEER

PLANS APPROVAL DATE

REGISTERED PROFESSIONAL ENGINEER MIN MAUNG No. E012210 Exp. 09/30/06 ELECT STATE OF CALIFORNIA

The State of California or its officers or agents shall not be responsible for the accuracy or completeness of electronic copies of this plan sheet.

HNTB *Corporation*
200 E. SANDPOINTE AVENUE, SUITE 200
SANTA ANA, CALIFORNIA 92707

Caltrans now has a web site! To get to the web site, go to: http://www.dot.ca.gov

STATE OF CALIFORNIA - DEPARTMENT OF TRANSPORTATION
Caltrans
ELECTRICAL

DESIGN OVERSIGHT: BEHZAD MOLAVI, ALI MOHAMMADI
CALCULATED/DESIGNED BY: A. GOROVAYA
CHECKED BY: M. MAUNG
DATE: 9/30/05
REVISED BY: DATE REVISED

PS&E SUBMITTAL (11/18/05)
NOT FOR CONSTRUCTION

ALL DIMENSIONS ARE IN MILLIMETERS UNLESS OTHERWISE SHOWN

TUNNEL LIGHTING FIXTURE SCHEDULE NO. 9

E9.10

LAST REVISION 00-00-00
DATE PLOTTED => 09-NOV-2005
TIME PLOTTED => 15:13

RELATIVE BORDER SCALE IS IN MILLIMETERS 0 20 40 60 80

USERNAME => lGraham
DGN FILE => 41123uza141.dgn

CU 04240
EA 1123U1

DAYTIME LIGHT FIXTURES
ROW 4 (CONT)

FIXTURE NO.	CIRCUIT NO.	PHASE	FROM JB NO.	ROADWAY STATION	FIXTURE TYPE	FUNCTION GROUP
4-133	MNLS-3A	BC	JB 4-070	129+33.25	H1a	M
4-134	MNLS-3A	CA	JB 4-070	129+30.95	H1a	M
4-135	MNLS-3J	CA	JB 4-071	129+29.05	H1a	L
4-136	MNLS-3A	AB	JB 4-072	129+27.15	H1a	M
4-137	MNLS-3A	BC	JB 4-072	129+25.25	H1a	M
4-138	MNLS-3J	AB	JB 4-074	129+22.65	H1a	L
4-139	MNLS-3A	CA	JB 4-075	129+20.75	H1a	M
4-140	MNLS-3A	AB	JB 4-075	129+18.85	H1a	M
4-141	MNLS-3J	BC	JB 4-076	129+16.95	H1a	L
4-142	MNLS-3A	BC	JB 4-078	129+14.35	H1a	M
4-143	MNLS-3A	CA	JB 4-078	129+12.45	H1a	M
4-144	MNLS-3J	CA	JB 4-079	129+10.55	H1a	L
4-145	MNLS-3A	AB	JB 4-080	129+08.65	H1a	M
4-146	MNLS-3A	BC	JB 4-080	129+06.05	H1a	M
4-147	MNLS-3J	AB	JB 4-082	129+04.15	H1a	L
4-148	MNLS-3A	CA	JB 4-083	129+02.25	H1a	M
4-149	MNLS-3A	AB	JB 4-083	129+00.35	H1a	M
4-150	MNLS-3J	BC	JB 4-085	128+97.75	H1a	L
4-151	MNLS-3A	BC	JB 4-086	128+95.85	H1a	M
4-152	MNLS-3A	CA	JB 4-086	128+93.95	H1a	M
4-153	MNLS-3J	CA	JB 4-087	128+92.05	H1a	L
4-154	MNLS-3A	AB	JB 4-089	128+89.45	H1a	M
4-155	MNLS-3A	BC	JB 4-089	128+87.15	H1a	M
4-156	MNLS-3J	AB	JB 4-090	128+84.75	H1a	L
4-157	MNLS-3A	CA	JB 4-091	128+82.35	H1a	M
4-158	MNLS-3J	BC	JB 4-093	128+78.60	H1a	L
4-159	MNLS-3A	AB	JB 4-094	128+74.85	H1a	M
4-160	MNLS-3J	CA	JB 4-096	128+71.10	H1a	L
4-161	MNLS-3A	BC	JB 4-097	128+67.35	H1a	M
4-162	MNLS-3J	AB	JB 4-099	128+63.60	H1a	L
4-163	MNLS-3A	CA	JB 4-100	128+59.85	H1a	M
4-164	MNLS-4E	AB	JB 4-101	128+56.05	H2	24 HR
4-165	MNLS-3A	AB	JB 4-102	128+51.80	H2	M
4-166	MNLS-4E	BC	JB 4-103	128+47.55	H2	24 HR
4-167	MNLS-3A	BC	JB 4-104	128+43.30	H2	M
4-168	MNLS-4E	CA	JB 4-105	128+39.05	H2	24 HR
4-169	MNLS-3A	CA	JB 4-106	128+34.80	H2	M
4-170	MNLS-4E	AB	JB 4-107	128+30.55	H2	24 HR
4-171	MNLS-3A	AB	JB 4-108	128+26.30	H2	M
4-172	MNLS-4E	BC	JB 4-109	128+22.05	H2	24 HR
4-173	MNLS-4E	CA	JB 4-110	128+13.55	H2	24 HR
4-174	MNLS-4E	AB	JB 4-111	128+05.05	H2	24 HR
4-175	MNLS-4E	BC	JB 4-112	127+96.55	H2	24 HR
4-176	MNLS-4E	CA	JB 4-113	127+88.05	H2	24 HR
4-177	MNLS-4E	AB	JB 4-114	127+79.55	H2	24 HR
4-178	MNLS-4E	BC	JB 4-115	127+71.05	H2	24 HR
4-179	MNLS-4E	CA	JB 4-116	127+62.55	H2	24 HR
4-180	MNLS-4E	AB	JB 4-117	127+54.05	H2	24 HR
4-181	MNLS-4E	BC	JB 4-118	127+45.55	H2	24 HR
4-182	MNLS-4E	CA	JB 4-119	127+37.05	H2	24 HR
4-183	MNLS-4E	AB	JB 4-120	127+28.55	H2	24 HR
4-184	MNLS-4E	BC	JB 4-121	127+20.05	H2	24 HR
4-185	MNLS-4E	CA	JB 4-122	127+11.55	H2	24 HR
4-186	MNLS-4E	AB	JB 4-123	127+03.05	H2	24 HR
4-187	MNLS-4E	BC	JB 4-124	126+94.55	H2	24 HR
4-188	MNLS-4E	CA	JB 4-125	126+86.05	H2	24 HR
4-189	MNLS-4E	AB	JB 4-126	126+77.55	H2	24 HR
4-190	MNLS-4E	BC	JB 4-127	126+69.05	H2	24 HR
4-191	MNLS-4E	CA	JB 4-128	126+60.55	H2	24 HR

DAYTIME LIGHT FIXTURES
ROW 4 (CONT)

FIXTURE NO.	CIRCUIT NO.	PHASE	FROM JB NO.	ROADWAY STATION	FIXTURE TYPE	FUNCTION GROUP
4-192	MNLS-4E	AB	JB 4-129	126+52.05	H2	24 HR
4-193	MNLS-4E	BC	JB 4-130	126+43.55	H2	24 HR
4-194	MNLS-4E	CA	JB 4-131	126+35.05	H2	24 HR
4-195	MNLS-4E	AB	JB 4-132	126+26.55	H2	24 HR
4-196	MNLS-4E	BC	JB 4-133	126+18.05	H2	24 HR
4-197	MNLS-4E	CA	JB 4-134	126+09.55	H2	24 HR
4-198	MNLS-4E	AB	JB 4-135	126+01.05	H2	24 HR
4-199	MNLS-4E	BC	JB 4-136	125+92.55	H2	24 HR
4-200	MNLS-4E	CA	JB 4-137	125+84.05	H2	24 HR
4-201	MNLS-4E	AB	JB 4-138	125+75.55	H2	24 HR
4-202	MNLS-4E	BC	JB 4-139	125+67.05	H2	24 HR
4-203	MNLS-4E	CA	JB 4-140	125+58.55	H2	24 HR
4-204	MNLS-4E	AB	JB 4-141	125+50.05	H2	24 HR
4-205	MNLS-4E	BC	JB 4-142	125+41.55	H2	24 HR
4-206	MNLS-4E	CA	JB 4-143	125+33.05	H2	24 HR
4-207	MNLS-4E	AB	JB 4-144	125+24.55	H2	24 HR
4-208	MNLS-4E	BC	JB 4-145	125+16.05	H2	24 HR
4-209	MNLS-4E	CA	JB 4-146	125+07.55	H2	24 HR
4-210	MNLS-4E	AB	JB 4-147	124+99.05	H2	24 HR
4-211	MNLS-4E	BC	JB 4-148	124+90.55	H2	24 HR
4-212	MNLS-4E	CA	JB 4-149	124+82.05	H2	24 HR
4-213	MNLS-4E	AB	JB 4-150	124+73.55	H2	24 HR
4-214	MNLS-4E	BC	JB 4-151	124+65.05	H2	24 HR
4-215	MNLS-4E	CA	JB 4-152	124+56.55	H2	24 HR
4-216	MNLS-4E	AB	JB 4-153	124+48.05	H2	24 HR
4-217	MNLS-4E	BC	JB 4-154	124+39.55	H2	24 HR
4-218	MNLS-4E	CA	JB 4-155	124+31.05	H2	24 HR
4-219	MSLS-4J	AB	JB 4-156	124+22.55	H2	24 HR
4-220	MSLS-4J	BC	JB 4-157	124+14.05	H2	24 HR
4-221	MSLS-4J	CA	JB 4-158	124+05.55	H2	24 HR
4-222	MSLS-4J	AB	JB 4-159	123+97.05	H2	24 HR
4-223	MSLS-4J	BC	JB 4-160	123+88.55	H2	24 HR
4-224	MSLS-4J	CA	JB 4-161	123+80.05	H2	24 HR
4-225	MSLS-4J	AB	JB 4-162	123+71.55	H2	24 HR
4-226	MSLS-4J	BC	JB 4-163	123+63.05	H2	24 HR
4-227	MSLS-4J	CA	JB 4-164	123+54.55	H2	24 HR
4-228	MSLS-4J	AB	JB 4-165	123+46.05	H2	24 HR
4-229	MSLS-4J	BC	JB 4-166	123+37.55	H2	24 HR
4-230	MSLS-4J	CA	JB 4-167	123+29.05	H2	24 HR
4-231	MSLS-4J	AB	JB 4-168	123+20.55	H2	24 HR
4-232	MSLS-4J	BC	JB 4-169	123+12.05	H2	24 HR
4-233	MSLS-4J	CA	JB 4-170	123+03.55	H2	24 HR
4-234	MSLS-4J	AB	JB 4-171	122+95.05	H2	24 HR
4-235	MSLS-4J	BC	JB 4-172	122+86.55	H2	24 HR
4-236	MSLS-4J	CA	JB 4-173	122+78.05	H2	24 HR
4-237	MSLS-4J	AB	JB 4-174	122+69.55	H2	24 HR
4-238	MSLS-4J	BC	JB 4-175	122+61.05	H2	24 HR
4-239	MSLS-4J	CA	JB 4-176	122+52.55	H2	24 HR
4-240	MSLS-4J	AB	JB 4-177	122+44.05	H2	24 HR
4-241	MSLS-4J	BC	JB 4-178	122+35.55	H2	24 HR
4-242	MSLS-4J	CA	JB 4-179	122+27.05	H2	24 HR
4-243	MSLS-4J	AB	JB 4-180	122+18.55	H2	24 HR
4-244	MSLS-4J	BC	JB 4-181	122+10.05	H2	24 HR
4-245	MSLS-4J	CA	JB 4-182	122+01.55	H2	24 HR
4-246	MSLS-4J	AB	JB 4-183	121+93.05	H2	24 HR
4-247	MSLS-4J	BC	JB 4-184	121+84.55	H2	24 HR
4-248	MSLS-4J	CA	JB 4-185	121+76.05	H2	24 HR
4-249	MSLS-4J	AB	JB 4-186	121+67.55	H2	24 HR
4-250	MSLS-4J	BC	JB 4-187	121+59.05	H2	24 HR

Caltrans Metric

DIST	COUNTY	ROUTE	KILOMETER POST TOTAL PROJECT	SHEET No	TOTAL SHEETS
04	SM	1			

Min Maung 9/30/05
REGISTERED ELECTRICAL ENGINEER

PLANS APPROVAL DATE

REGISTERED PROFESSIONAL ENGINEER MIN MAUNG No. E012210 Exp. 09/30/06 ELECT STATE OF CALIFORNIA

The State of California or its officers or agents shall not be responsible for the accuracy or completeness of electronic copies of this plan sheet.

HNTB *Corporation*
200 E. SANDPOINTE AVENUE, SUITE 200
SANTA ANA, CALIFORNIA 92707

Caltrans now has a web site! To get to the web site, go to: http://www.dot.ca.gov

ALL DIMENSIONS ARE IN MILLIMETERS UNLESS OTHERWISE SHOWN

TUNNEL LIGHTING FIXTURE SCHEDULE NO. 10

E9.11

PS&E SUBMITTAL (11/18/05)
NOT FOR CONSTRUCTION

REVISED BY	DATE	DATE REVISED
A. GOROVAYA	9/30/05	

CALCULATED/DESIGNED BY: A. GOROVAYA
CHECKED BY: M. MAUNG

DESIGN OVERSIGHT: BEHZAD GOLEMOHAMMADI

STATE OF CALIFORNIA - DEPARTMENT OF TRANSPORTATION
Caltrans
ELECTRICAL

LAST REVISION 00-00-00 | DATE PLOTTED => 09-NOV-2005 | TIME PLOTTED => 15:13

RELATIVE BORDER SCALE IS IN MILLIMETERS 0 20 40 60 80

USERNAME => lGraham
DGN FILE => 41123uza142.dgn

CU 04240

EA 1123U1

DAYTIME LIGHT FIXTURES
ROW 4 (CONT)

FIXTURE NO.	CIRCUIT NO.	PHASE	FROM JB NO.	ROADWAY STATION	FIXTURE TYPE	FUNCTION GROUP
4-251	MSLS-4J	CA	JB 4-188	121+50.55	H2	24 HR
4-252	MSLS-4J	AB	JB 4-189	121+42.05	H2	24 HR
4-253	MSLS-4J	BC	JB 4-190	121+33.55	H2	24 HR
4-254	MSLS-4J	CA	JB 4-191	121+25.05	H2	24 HR
4-255	MSLS-4J	AB	JB 4-192	121+16.55	H2	24 HR
4-256	MSLS-4J	BC	JB 4-193	121+08.05	H2	24 HR
4-257	MSLS-4J	CA	JB 4-194	120+99.55	H2	24 HR
4-258	MSLS-4J	AB	JB 4-195	120+91.05	H2	24 HR
4-259	MSLS-4J	BC	JB 4-196	120+82.55	H2	24 HR
4-260	MSLS-4J	CA	JB 4-197	120+74.05	H2	24 HR
4-261	MSLS-4J	AB	JB 4-198	120+65.55	H2	24 HR
4-262	MSLS-4J	BC	JB 4-199	120+57.05	H2	24 HR
4-263	MSLS-4J	CA	JB 4-200	120+48.55	H2	24 HR
4-264	MSLS-4J	AB	JB 4-201	120+40.05	H2	24 HR
4-265	MSLS-4J	BC	JB 4-202	120+31.55	H2	24 HR
4-266	MSLS-4J	CA	JB 4-203	120+23.05	H2	24 HR
4-267	MSLS-4J	AB	JB 4-204	120+14.55	H2	24 HR
4-268	MSLS-4J	BC	JB 4-205	120+06.05	H2	24 HR
4-269	MSLS-4J	CA	JB 4-206	119+97.55	H2	24 HR
4-270	MSLS-4J	AB	JB 4-207	119+89.05	H2	24 HR
4-271	MSLS-4J	BC	JB 4-208	119+80.55	H2	24 HR
4-272	MSLS-4J	CA	JB 4-209	119+72.05	H2	24 HR
4-273	MSLS-4J	AB	JB 4-210	119+63.55	H2	24 HR
4-274	MSLS-4J	BC	JB 4-211	119+55.05	H2	24 HR
4-275	MSLS-4J	CA	JB 4-212	119+46.55	H2	24 HR
4-276	MSLS-4J	AB	JB 4-213	119+38.05	H2	24 HR
4-277	MSLS-4J	BC	JB 4-214	119+29.55	H2	24 HR
4-278	MSLS-4J	CA	JB 4-215	119+21.05	H2	24 HR
4-279	MSLS-4J	AB	JB 4-216	119+14.05	H2	24 HR
4-280	MSLS-4J	BC	JB 4-217	119+07.05	H2	24 HR
4-281	MSLS-3A	AB	JB 4-218	119+02.80	H2	M
4-282	MSLS-4J	CA	JB 4-219	118+98.55	H2	24 HR
4-283	MSLS-3A	BC	JB 4-220	118+94.30	H2	M
4-284	MSLS-4J	AB	JB 4-221	118+90.05	H2	24 HR
4-285	MSLS-3A	CA	JB 4-222	118+85.80	H2	M
4-286	MSLS-4J	BC	JB 4-223	118+81.55	H2	24 HR
4-287	MSLS-3A	AB	JB 4-224	118+77.30	H2	M
4-288	MSLS-4J	CA	JB 4-225	118+73.05	H2	24 HR
4-289	MSLS-3A	BC	JB 4-226	118+68.80	H2	M
4-290	MSLS-4J	AB	JB 4-227	118+64.55	H2	24 HR
4-291	MSLS-3A	CA	JB 4-228	118+60.30	H2	M
4-292	MSLS-4J	BC	JB 4-229	118+56.05	H2	24 HR
4-293	MSLS-3A	AB	JB 4-230	118+52.75	H2	M
4-294	MSLS-4J	CA	JB 4-231	118+49.45	H2	24 HR
4-295	NOT USED					

PS&E SUBMITTAL (11/18/05)
NOT FOR CONSTRUCTION

ALL DIMENSIONS ARE IN MILLIMETERS UNLESS OTHERWISE SHOWN

TUNNEL LIGHTING FIXTURE SCHEDULE. NO. 11

E9.12

DIST	COUNTY	ROUTE	KILOMETER POST TOTAL PROJECT	SHEET No	TOTAL SHEETS
04	SM	1			

Min Maung 9/30/05
REGISTERED ELECTRICAL ENGINEER

PLANS APPROVAL DATE

REGISTERED PROFESSIONAL ENGINEER MIN MAUNG No. E012210 Exp. 09/30/06 ELECT STATE OF CALIFORNIA

The State of California or its officers or agents shall not be responsible for the accuracy or completeness of electronic copies of this plan sheet.

HNTB *Corporation*
200 E. SANDPOINTE AVENUE, SUITE 200
SANTA ANA, CALIFORNIA 92707

Caltrans now has a web site! To get to the web site, go to: http://www.dot.ca.gov

Caltrans Metric

STATE OF CALIFORNIA - DEPARTMENT OF TRANSPORTATION
Caltrans **ELECTRICAL**

DESIGN OVERSIGHT: BEHZAD GOLEMOHAMMADI
CALCULATED/DESIGNED BY: A. GOROVAYA
CHECKED BY: M. MAUNG
REVISED BY: DATE REVISED
DATE: 9/30/05

LAST REVISION 00-00-00
DATE PLOTTED => 09-NOV-2005
TIME PLOTTED => 15:13

RELATIVE BORDER SCALE IS IN MILLIMETERS 0 20 40 60 80
USERNAME => lGraham
DGN FILE => 41123uza143.dgn
CU 04240
EA 1123U1

NIGHTTIME LIGHT FIXTURES
ROW 1 AND ROW 2

FIXTURE NO.	CIRCUIT NO.	PHASE	FROM JB NO.	ROADWAY STATION	FIXTURE TYPE
N1-001	MSLS-4A	AB	JB 1-002	118+41.20	H2
N1-002	MSLS-4A	BC	JB 1-005	118+49.70	H2
N1-003	MSLS-4A	CA	JB 1-008	118+57.40	H2
N1-004	MSLS-4A	AB	JB 1-011	118+65.50	H2
N1-005	MSLS-4A	BC	JB 1-014	118+73.60	H2
N1-006	MSLS-4A	CA	JB 1-017	118+81.70	H2
N1-007	MSLS-4A	AB	JB 1-020	118+89.80	H2
N1-008	MSLS-4A	BC	JB 1-023	118+97.90	H2
N1-009	MSLS-4A	CA	JB 1-026	119+06.00	H2
N1-010	MSLS-4A	AB	JB 1-029	119+14.10	H2
N1-011	MSLS-4A	BC	JB 1-032	119+22.20	H2
N1-012	MSLS-4A	CA	JB 1-035	119+30.30	H2
N1-013	MSLS-4A	AB	JB 1-038	119+38.40	H2
N1-014	MSLS-4A	BC	JB 1-041	119+46.50	H2
N1-015	MSLS-4A	CA	JB 1-044	119+54.60	H2
N1-016	MSLS-4A	AB	JB 1-047	119+62.70	H2
N1-017	MSLS-4A	BC	JB 1-051	119+71.00	H2
N1-018	MSLS-4A	CA	JB 1-054	119+79.50	H2
N1-019	MSLS-4A	AB	JB 1-057	119+88.00	H2
N1-020	MSLS-4A	BC	JB 1-060	119+96.50	H2
N1-021	MSLS-4A	CA	JB 1-063	120+05.00	H2
N1-022	MSLS-4A	AB	JB 1-066	120+13.50	H2
N1-023	MSLS-4A	BC	JB 1-069	120+21.80	H2
N1-024	MSLS-4A	CA	JB 1-073	120+30.10	H2
N1-025	MSLS-4A	AB	JB 1-077	120+38.40	H2
N1-026	MSLS-4A	BC	JB 1-081	120+46.70	H2
N1-027	MSLS-4A	CA	JB 1-084	120+55.00	H2
N1-028	MSLS-4A	AB	JB 1-088	120+63.30	H2
N1-029	MSLS-4A	BC	JB 1-092	120+72.00	H2
N1-030	MSLS-4A	CA	JB 1-095	120+80.50	H2
N1-031	MSLS-4A	AB	JB 1-098	120+89.00	H2
N2-001	MSLE-2A	AB	JB 2-002	118+41.20	H2
N2-002	MSLE-2A	BC	JB 2-005	118+49.30	H2
N2-003	MSLE-2A	CA	JB 2-008	118+57.40	H2
N2-004	MSLE-2A	AB	JB 2-011	118+65.50	H2
N2-005	MSLE-2A	BC	JB 2-014	118+73.60	H2
N2-006	MSLE-2A	CA	JB 2-017	118+81.70	H2
N2-007	MSLE-2A	AB	JB 2-020	118+89.80	H2
N2-008	MSLE-2A	BC	JB 2-023	118+97.90	H2
N2-009	MSLE-2A	CA	JB 2-026	119+06.00	H2
N2-010	MSLE-2A	AB	JB 2-029	119+14.10	H2
N2-011	MSLE-2A	BC	JB 2-032	119+22.20	H2
N2-012	MSLE-2A	CA	JB 2-035	119+30.30	H2
N2-013	MSLE-2A	AB	JB 2-038	119+38.40	H2
N2-014	MSLE-2A	BC	JB 2-041	119+46.50	H2
N2-015	MSLE-2A	CA	JB 2-044	119+54.60	H2
N2-016	MSLE-2A	AB	JB 2-047	119+62.70	H2
N2-017	MSLE-2A	BC	JB 2-051	119+71.00	H2
N2-018	MSLE-2A	CA	JB 2-054	119+79.50	H2
N2-019	MSLE-2A	AB	JB 2-057	119+88.00	H2
N2-020	MSLE-2A	BC	JB 2-060	119+96.50	H2
N2-021	MSLE-2A	CA	JB 2-063	120+05.00	H2
N2-022	MSLE-2A	AB	JB 2-066	120+13.50	H2
N2-023	MSLE-2A	BC	JB 2-069	120+21.80	H2
N2-024	MSLE-2A	CA	JB 2-073	120+30.10	H2
N2-025	MSLE-2A	AB	JB 2-077	120+38.40	H2
N2-026	MSLE-2A	BC	JB 2-081	120+46.70	H2
N2-027	MSLE-2A	CA	JB 2-084	120+55.00	H2
N2-028	MSLE-2A	AB	JB 2-088	120+63.30	H2
N2-029	MSLE-2A	BC	JB 2-092	120+72.00	H2
N2-030	MSLE-2A	CA	JB 2-095	120+80.50	H2
N2-031	MSLE-2A	AB	JB 2-098	120+89.00	H2

NIGHTTIME LIGHT FIXTURES
ROW 3 AND ROW 4

FIXTURE NO.	CIRCUIT NO.	PHASE	FROM JB NO.	ROADWAY STATION	FIXTURE TYPE
N3-001	MNLE-2A	AB	JB 3-003	131+20.45	H2
N3-002	MNLE-2A	BC	JB 3-006	131+12.35	H2
N3-003	MNLE-2A	CA	JB 3-009	131+04.25	H2
N3-004	MNLE-2A	AB	JB 3-012	130+96.15	H2
N3-005	MNLE-2A	BC	JB 3-015	130+88.05	H2
N3-006	MNLE-2A	CA	JB 3-018	130+79.95	H2
N3-007	MNLE-2A	AB	JB 3-021	130+71.85	H2
N3-008	MNLE-2A	BC	JB 3-024	130+63.75	H2
N3-009	MNLE-2A	CA	JB 3-027	130+55.65	H2
N3-010	MNLE-2A	AB	JB 3-030	130+47.55	H2
N3-011	MNLE-2A	BC	JB 3-033	130+39.45	H2
N3-012	MNLE-2A	CA	JB 3-036	130+31.35	H2
N3-013	MNLE-2A	AB	JB 3-039	130+23.25	H2
N3-014	MNLE-2A	BC	JB 3-042	130+15.15	H2
N3-015	MNLE-2A	CA	JB 3-045	130+07.05	H2
N3-016	MNLE-2A	AB	JB 3-048	129+98.95	H2
N3-017	MNLE-2A	BC	JB 3-051	129+90.85	H2
N3-018	MNLE-2A	CA	JB 3-055	129+82.55	H2
N3-019	MNLE-2A	AB	JB 3-058	129+74.05	H2
N3-020	MNLE-2A	BC	JB 3-061	129+65.55	H2
N3-021	MNLE-2A	CA	JB 3-064	129+57.05	H2
N3-022	MNLE-2A	AB	JB 3-067	129+48.55	H2
N3-023	MNLE-2A	BC	JB 3-070	129+40.05	H2
N3-024	MNLE-2A	CA	JB 3-073	129+31.75	H2
N3-025	MNLE-2A	AB	JB 3-077	129+23.45	H2
N3-026	MNLE-2A	BC	JB 3-081	129+15.15	H2
N3-027	MNLE-2A	CA	JB 3-085	129+06.85	H2
N3-028	MNLE-2A	AB	JB 3-088	128+98.55	H2
N3-029	MNLE-2A	BC	JB 3-092	128+90.25	H2
N3-030	MNLE-2A	CA	JB 3-096	128+81.55	H2
N3-031	MNLE-2A	AB	JB 3-099	128+73.05	H2
N3-032	MNLE-2A	BC	JB 3-102	128+64.55	H2
N4-001	MNLS-4A	AB	JB 4-002	131+12.35	H2
N4-002	MNLS-4A	BC	JB 4-005	131+04.25	H2
N4-003	MNLS-4A	CA	JB 4-008	130+96.15	H2
N4-004	MNLS-4A	AB	JB 4-011	130+88.05	H2
N4-005	MNLS-4A	BC	JB 4-014	130+79.95	H2
N4-006	MNLS-4A	CA	JB 4-017	130+71.85	H2
N4-007	MNLS-4A	AB	JB 4-020	130+63.75	H2
N4-008	MNLS-4A	BC	JB 4-023	130+55.65	H2
N4-009	MNLS-4A	CA	JB 4-026	130+47.55	H2
N4-010	MNLS-4A	AB	JB 4-029	130+39.45	H2
N4-011	MNLS-4A	BC	JB 4-032	130+31.35	H2
N4-012	MNLS-4A	CA	JB 4-035	130+23.25	H2
N4-013	MNLS-4A	AB	JB 4-038	130+15.15	H2
N4-014	MNLS-4A	BC	JB 4-041	130+07.05	H2
N4-015	MNLS-4A	CA	JB 4-044	129+98.95	H2
N4-016	MNLS-4A	AB	JB 4-047	129+90.85	H2
N4-017	MNLS-4A	BC	JB 4-051	129+82.55	H2
N4-018	MNLS-4A	CA	JB 4-054	129+74.05	H2
N4-019	MNLS-4A	AB	JB 4-057	129+65.55	H2
N4-020	MNLS-4A	BC	JB 4-060	129+57.05	H2
N4-021	MNLS-4A	CA	JB 4-063	129+48.55	H2
N4-022	MNLS-4A	AB	JB 4-066	129+40.05	H2
N4-023	MNLS-4A	BC	JB 4-069	129+31.75	H2
N4-024	MNLS-4A	CA	JB 4-073	129+23.45	H2
N4-025	MNLS-4A	AB	JB 4-077	129+15.15	H2
N4-026	MNLS-4A	BC	JB 4-081	129+06.85	H2
N4-027	MNLS-4A	CA	JB 4-084	128+98.55	H2
N4-028	MNLS-4A	AB	JB 4-088	128+90.25	H2
N4-029	MNLS-4A	BC	JB 4-092	128+81.55	H2
N4-030	MNLS-4A	CA	JB 4-095	128+73.05	H2
N4-031	MNLS-4A	AB	JB 4-098	128+64.55	H2

Caltrans Metric

DIST	COUNTY	ROUTE	KILOMETER POST TOTAL PROJECT	SHEET No	TOTAL SHEETS
04	SM	1			

Min Maung 9/30/05
REGISTERED ELECTRICAL ENGINEER

PLANS APPROVAL DATE

REGISTERED PROFESSIONAL ENGINEER MIN MAUNG No. E012210 Exp. 09/30/06 ELECT STATE OF CALIFORNIA

The State of California or its officers or agents shall not be responsible for the accuracy or completeness of electronic copies of this plan sheet.

HNTB *Corporation*
200 E. SANDPOINTE AVENUE, SUITE 200
SANTA ANA, CALIFORNIA 92707

Caltrans now has a web site! To get to the web site, go to: http://www.dot.ca.gov

ALL DIMENSIONS ARE IN MILLIMETERS UNLESS OTHERWISE SHOWN

TUNNEL LIGHTING FIXTURE SCHEDULE NO. 12

E9.13

PS&E SUBMITTAL (11/18/05)
NOT FOR CONSTRUCTION

		DATE	REVISED BY	DATE REVISED
CALCULATED/DESIGNED BY	A. GOROVAYA	9/30/05		
CHECKED BY	M. MAUNG			
DESIGN OVERSIGHT	BEHZAD GOLEMOHAMMADI			

STATE OF CALIFORNIA - DEPARTMENT OF TRANSPORTATION
Caltrans
ELECTRICAL

LAST REVISION 00-00-00
DATE PLOTTED => 09-NOV-2005
TIME PLOTTED => 15:13

RELATIVE BORDER SCALE IS IN MILLIMETERS 0 20 40 60 80

USERNAME => lGraham
DGN FILE => 41123uza144.dgn

CU 04240

EA 1123U1

LIGHTING J-BOX SCHEDULE ROW 1

JB NO.	ROADWAY STATION	TYPE
1-001	118+40.60	LB1
1-002	118+41.50	LB2
1-003	118+42.40	LB1
1-004	118+45.20	LB1
1-005	118+47.35	LB2
1-006	118+52.20	LB1
1-007	118+53.50	LB1
1-008	118+54.90	LB2
1-009	118+59.95	LB1
1-010	118+61.45	LB1
1-011	118+62.95	LB2
1-012	118+68.05	LB1
1-013	118+69.55	LB1
1-014	118+71.10	LB2
1-015	118+76.15	LB1
1-016	118+77.65	LB1
1-017	118+81.55	LB2
1-018	118+82.10	LB1
1-019	118+85.75	LB1
1-020	118+89.65	LB2
1-021	118+90.20	LB1
1-022	118+93.85	LB1
1-023	118+97.75	LB2
1-024	118+98.30	LB1
1-025	119+01.95	LB1
1-026	119+05.85	LB2
1-027	119+06.40	LB1
1-028	119+10.05	LB1
1-029	119+13.95	LB2
1-030	119+14.50	LB1
1-031	119+18.15	LB1
1-032	119+22.05	LB2
1-033	119+22.60	LB1
1-034	119+26.25	LB1
1-035	119+30.15	LB2
1-036	119+30.70	LB1
1-037	119+34.35	LB1
1-038	119+38.25	LB2
1-039	119+38.80	LB1
1-040	119+42.45	LB1
1-041	119+46.35	LB2
1-042	119+46.90	LB1
1-043	119+50.55	LB1
1-044	119+54.45	LB2
1-045	119+55.00	LB1
1-046	119+58.65	LB1
1-047	119+62.55	LB2
1-048	119+63.10	LB1
1-049	119+67.80	LB1
1-050	119+68.35	LB1
1-051	119+70.85	LB2
1-052	119+74.50	LB1
1-053	119+76.70	LB1
1-054	119+79.35	LB2
1-055	119+83.00	LB1
1-056	119+85.20	LB1
1-057	119+87.85	LB2

LIGHTING J-BOX SCHEDULE ROW 1- (CONT.)

JB NO.	ROADWAY STATION	TYPE
1-058	119+91.55	LB1
1-059	119+93.75	LB1
1-060	119+96.40	LB2
1-061	120+00.10	LB1
1-062	120+02.30	LB1
1-063	120+04.95	LB2
1-064	120+08.65	LB1
1-065	120+10.85	LB1
1-066	120+13.35	LB2
1-067	120+15.55	LB1
1-068	120+18.35	LB2
1-069	120+21.65	LB2
1-070	120+22.20	LB1
1-071	120+24.40	LB2
1-072	120+27.30	LB1
1-073	120+29.90	LB2
1-074	120+30.80	LB2
1-075	120+33.70	LB1
1-076	120+36.55	LB2
1-077	120+38.25	LB2
1-078	120+40.15	LB1
1-079	120+42.95	LB2
1-080	120+46.00	LB1
1-081	120+46.55	LB2
1-082	120+49.35	LB2
1-083	120+52.30	LB1
1-084	120+54.90	LB2
1-085	120+55.80	LB2
1-086	120+58.70	LB1
1-087	120+61.45	LB2
1-088	120+63.20	LB2
1-089	120+65.30	LB1
1-090	120+68.80	LB2
1-091	120+71.10	LB2
1-092	120+71.90	LB2
1-093	120+74.90	LB2
1-094	120+78.60	LB2
1-095	120+80.35	LB2
1-096	120+82.35	LB2
1-097	120+86.05	LB2
1-098	120+88.80	LB2
1-099	120+89.80	LB2
1-100	120+93.60	LB2
1-101	120+97.35	LB2
1-102	121+01.60	LB2
1-103	121+05.85	LB2
1-104	121+10.10	LB2
1-105	121+14.35	LB2
1-106	121+18.60	LB2
1-107	121+22.85	LB2
1-108	121+27.10	LB2
1-109	121+31.35	LB2
1-110	121+39.85	LB2
1-111	121+48.35	LB2
1-112	121+56.85	LB2
1-113	121+65.35	LB2
1-114	121+73.85	LB2

LIGHTING J-BOX SCHEDULE ROW 1- (CONT.)

JB NO.	ROADWAY STATION	TYPE
1-115	121+82.35	LB2
1-116	121+90.85	LB2
1-117	121+99.35	LB2
1-118	122+07.85	LB2
1-119	122+16.35	LB2
1-120	122+24.85	LB2
1-121	122+33.35	LB2
1-122	122+41.85	LB2
1-123	122+50.35	LB2
1-124	122+58.85	LB2
1-125	122+67.35	LB2
1-126	122+75.85	LB2
1-127	122+84.35	LB2
1-128	122+92.85	LB2
1-129	123+01.35	LB2
1-130	123+09.85	LB2
1-131	123+18.35	LB2
1-132	123+26.85	LB2
1-133	123+35.35	LB2
1-134	123+43.85	LB2
1-135	123+52.35	LB2
1-136	123+60.85	LB2
1-137	123+69.35	LB2
1-138	123+77.85	LB2
1-139	123+86.35	LB2
1-140	123+94.85	LB2
1-141	124+03.35	LB2
1-142	124+11.85	LB2
1-143	124+20.35	LB2
1-144	124+28.85	LB2
1-145	124+37.35	LB2
1-146	124+45.85	LB2
1-147	124+54.35	LB2
1-148	124+62.85	LB2
1-149	124+71.35	LB2
1-150	124+79.85	LB2
1-151	124+88.35	LB2
1-152	124+96.85	LB2
1-153	125+05.35	LB2
1-154	125+13.85	LB2
1-155	125+22.35	LB2
1-156	125+30.85	LB2
1-157	125+39.35	LB2
1-158	125+47.85	LB2
1-159	125+56.35	LB2
1-160	125+64.85	LB2
1-161	125+73.35	LB2
1-162	125+81.85	LB2
1-163	125+90.35	LB2
1-164	125+98.85	LB2
1-165	126+07.35	LB2
1-166	126+15.85	LB2
1-167	126+24.35	LB2
1-168	126+32.85	LB2
1-169	126+41.35	LB2
1-170	126+49.85	LB2
1-171	126+58.35	LB2

LIGHTING J-BOX SCHEDULE ROW 1- (CONT.)

JB NO.	ROADWAY STATION	TYPE
1-172	126+66.85	LB2
1-173	126+75.35	LB2
1-174	126+83.85	LB2
1-175	126+92.35	LB2
1-176	127+00.85	LB2
1-177	127+09.35	LB2
1-178	127+17.85	LB2
1-179	127+26.35	LB2
1-180	127+34.85	LB2
1-181	127+43.35	LB2
1-182	127+51.85	LB2
1-183	127+60.35	LB2
1-184	127+68.85	LB2
1-185	127+77.35	LB2
1-186	127+85.85	LB2
1-187	127+94.35	LB2
1-188	128+02.85	LB2
1-189	128+11.35	LB2
1-190	128+19.85	LB2
1-191	128+28.35	LB2
1-192	128+36.85	LB2
1-193	128+45.35	LB2
1-194	128+53.85	LB2
1-195	128+62.35	LB2
1-196	128+70.85	LB2
1-197	128+79.35	LB2
1-198	128+87.85	LB2
1-199	128+96.35	LB2
1-200	129+04.85	LB2
1-201	129+13.35	LB2
1-202	129+21.85	LB2
1-203	129+30.35	LB2
1-204	129+38.85	LB2
1-205	129+47.35	LB2
1-206	129+55.85	LB2
1-207	129+64.35	LB2
1-208	129+72.85	LB2
1-209	129+81.35	LB2
1-210	129+89.85	LB2
1-211	129+98.35	LB2
1-212	130+06.85	LB2
1-213	130+15.35	LB2
1-214	130+23.85	LB2
1-215	130+32.35	LB2
1-216	130+40.85	LB2
1-217	130+49.35	LB2
1-218	130+57.85	LB2
1-219	130+65.60	LB2
1-220	130+69.85	LB2
1-221	130+74.10	LB2
1-222	130+78.35	LB2
1-223	130+82.60	LB2
1-224	130+86.50	LB2
1-225	130+90.40	LB2
1-226	130+94.30	LB2
1-227	130+98.20	LB2
1-228	131+02.10	LB2

Caltrans Metric

DIST	COUNTY	ROUTE	KILOMETER POST TOTAL PROJECT	SHEET No	TOTAL SHEETS
04	SM	1			

Min Maung 9/30/05
REGISTERED ELECTRICAL ENGINEER

PLANS APPROVAL DATE

REGISTERED PROFESSIONAL ENGINEER MIN MAUNG No. E012210 Exp. 09/30/06 ELECT STATE OF CALIFORNIA

The State of California or its officers or agents shall not be responsible for the accuracy or completeness of electronic copies of this plan sheet.

HNTB *Corporation*
200 E. SANDPOINTE AVENUE, SUITE 200
SANTA ANA, CALIFORNIA 92707

Caltrans now has a web site! To get to the web site, go to: http://www.dot.ca.gov

LIGHTING J-BOX SCHEDULE ROW 1- (CONT.)

JB NO.	ROADWAY STATION	TYPE
1-229	131+06.00	LB2
1-230	131+09.90	LB2
1-231	131+14.70	LB2
1-232	131+18.00	LB2
1-233	131+21.30	LB2
1-234	131+24.60	LB2
1-235	131+29.75	LB2
1-236	131+33.05	LB2
1-237	131+36.35	LB2
1-238	131+39.65	LB2

ALL DIMENSIONS ARE IN MILLIMETERS UNLESS OTHERWISE SHOWN

TUNNEL LIGHTING J-BOX SCHEDULE NO. 1

E10.1

PS&E SUBMITTAL (11/18/05)
NOT FOR CONSTRUCTION

DATE	REVISED BY	DATE REVISED
9/30/05	M. MAUNG	

CALCULATED/DESIGNED BY: A. GOROVAYA
CHECKED BY: M. MAUNG

DESIGN OVERSIGHT: BEHZAD GOLEMOHAMMADI

STATE OF CALIFORNIA - DEPARTMENT OF TRANSPORTATION
Caltrans
ELECTRICAL

LAST REVISION 00-00-00 | DATE PLOTTED => 09-NOV-2005 | TIME PLOTTED => 15:13

RELATIVE BORDER SCALE IS IN MILLIMETERS 0 20 40 60 80

USERNAME => lGraham
DGN FILE => 41123uza145.dgn

CU 04240

EA 1123U1

DIST	COUNTY	ROUTE	KILOMETER POST TOTAL PROJECT	SHEET No	TOTAL SHEETS
04	SM	1			

Min Maung 9/30/05
REGISTERED ELECTRICAL ENGINEER

PLANS APPROVAL DATE

REGISTERED PROFESSIONAL ENGINEER MIN MAUNG No. E012210 Exp. 09/30/06 ELECT STATE OF CALIFORNIA

The State of California or its officers or agents shall not be responsible for the accuracy or completeness of electronic copies of this plan sheet.

HNTB *Corporation*
200 E. SANDPOINTE AVENUE, SUITE 200
SANTA ANA, CALIFORNIA 92707

Caltrans now has a web site! To get to the web site, go to: http://www.dot.ca.gov

Caltrans Metric

LIGHTING J-BOX SCHEDULE ROW 2

JB NO.	ROADWAY STATION	TYPE
2-001	118+40.60	LB1
2-002	118+41.50	LB2
2-003	118+42.40	LB1
2-004	118+45.20	LB1
2-005	118+47.35	LB2
2-006	118+52.20	LB1
2-007	118+53.50	LB1
2-008	118+54.90	LB2
2-009	118+59.95	LB1
2-010	118+61.45	LB1
2-011	118+62.95	LB2
2-012	118+68.05	LB1
2-013	118+69.55	LB1
2-014	118+71.10	LB2
2-015	118+76.15	LB1
2-016	118+77.65	LB1
2-017	118+81.55	LB2
2-018	118+82.10	LB1
2-019	118+85.75	LB1
2-020	118+89.65	LB2
2-021	118+90.20	LB1
2-022	118+93.85	LB1
2-023	118+97.75	LB2
2-024	118+98.30	LB1
2-025	119+01.95	LB1
2-026	119+05.85	LB2
2-027	119+06.40	LB1
2-028	119+10.05	LB1
2-029	119+13.95	LB2
2-030	119+14.50	LB1
2-031	119+18.15	LB1
2-032	119+22.05	LB2
2-033	119+22.60	LB1
2-034	119+26.25	LB1
2-035	119+30.15	LB2
2-036	119+30.70	LB1
2-037	119+34.35	LB1
2-038	119+38.25	LB2
2-039	119+38.80	LB1
2-040	119+42.45	LB1
2-041	119+46.35	LB2
2-042	119+46.90	LB1
2-043	119+50.55	LB1
2-044	119+54.45	LB2
2-045	119+55.00	LB1
2-046	119+58.65	LB1
2-047	119+62.55	LB2
2-048	119+63.10	LB1
2-049	119+67.80	LB1
2-050	119+68.35	LB1
2-051	119+70.85	LB2
2-052	119+74.50	LB1
2-053	119+76.70	LB1
2-054	119+79.35	LB2
2-055	119+83.00	LB1
2-056	119+85.20	LB1
2-057	119+87.85	LB2

LIGHTING J-BOX SCHEDULE ROW 2- (CONT.)

JB NO.	ROADWAY STATION	TYPE
2-058	119+91.55	LB1
2-059	119+93.75	LB1
2-060	119+96.40	LB2
2-061	120+00.10	LB1
2-062	120+02.30	LB1
2-063	120+04.95	LB2
2-064	120+08.65	LB1
2-065	120+10.85	LB1
2-066	120+13.35	LB2
2-067	120+15.55	LB1
2-068	120+18.35	LB2
2-069	120+21.65	LB2
2-070	120+22.20	LB1
2-071	120+24.40	LB2
2-072	120+27.30	LB1
2-073	120+29.90	LB2
2-074	120+30.80	LB2
2-075	120+33.70	LB1
2-076	120+36.55	LB2
2-077	120+38.25	LB2
2-078	120+40.15	LB1
2-079	120+42.95	LB2
2-080	120+46.00	LB1
2-081	120+46.55	LB2
2-082	120+49.35	LB2
2-083	120+52.30	LB1
2-084	120+54.90	LB2
2-085	120+55.80	LB2
2-086	120+58.70	LB1
2-087	120+61.45	LB2
2-088	120+63.20	LB2
2-089	120+65.30	LB1
2-090	120+68.80	LB2
2-091	120+71.10	LB2
2-092	120+71.90	LB2
2-093	120+74.90	LB2
2-094	120+78.60	LB2
2-095	120+80.35	LB2
2-096	120+82.35	LB2
2-097	120+86.05	LB2
2-098	120+88.80	LB2
2-099	120+89.80	LB2
2-100	120+93.60	LB2
2-101	120+97.35	LB2
2-102	121+01.60	LB2
2-103	121+05.85	LB2
2-104	121+10.10	LB2
2-105	121+14.35	LB2
2-106	121+18.60	LB2
2-107	121+22.85	LB2
2-108	121+27.10	LB2
2-109	121+31.35	LB2
2-110	121+39.85	LB2
2-111	121+48.35	LB2
2-112	121+56.85	LB2
2-113	121+65.35	LB2
2-114	121+73.85	LB2

LIGHTING J-BOX SCHEDULE ROW 2 - (CONT.)

JB NO.	ROADWAY STATION	TYPE
2-115	121+82.35	LB2
2-116	121+90.85	LB2
2-117	121+99.35	LB2
2-118	122+07.85	LB2
2-119	122+16.35	LB2
2-120	122+24.85	LB2
2-121	122+33.35	LB2
2-122	122+41.85	LB2
2-123	122+50.35	LB2
2-124	122+58.85	LB2
2-125	122+67.35	LB2
2-126	122+75.85	LB2
2-127	122+84.35	LB2
2-128	122+92.85	LB2
2-129	123+01.35	LB2
2-130	123+09.85	LB2
2-131	123+18.35	LB2
2-132	123+26.85	LB2
2-133	123+35.35	LB2
2-134	123+43.85	LB2
2-135	123+52.35	LB2
2-136	123+60.85	LB2
2-137	123+69.35	LB2
2-138	123+77.85	LB2
2-139	123+86.35	LB2
2-140	123+94.85	LB2
2-141	124+03.35	LB2
2-142	124+11.85	LB2
2-143	124+20.35	LB2
2-144	124+28.85	LB2
2-145	124+37.35	LB2
2-146	124+45.85	LB2
2-147	124+54.35	LB2
2-148	124+62.85	LB2
2-149	124+71.35	LB2
2-150	124+79.85	LB2
2-151	124+88.35	LB2
2-152	124+96.85	LB2
2-153	125+05.35	LB2
2-154	125+13.85	LB2
2-155	125+22.35	LB2
2-156	125+30.85	LB2
2-157	125+39.35	LB2
2-158	125+47.85	LB2
2-159	125+56.35	LB2
2-160	125+64.85	LB2
2-161	125+73.35	LB2
2-162	125+81.85	LB2
2-163	125+90.35	LB2
2-164	125+98.85	LB2
2-165	126+07.35	LB2
2-166	126+15.85	LB2
2-167	126+24.35	LB2
2-168	126+32.85	LB2
2-169	126+41.35	LB2
2-170	126+49.85	LB2
2-171	126+58.35	LB2

LIGHTING J-BOX SCHEDULE ROW 2 - (CONT.)

JB NO.	ROADWAY STATION	TYPE
2-172	126+66.85	LB2
2-173	126+75.35	LB2
2-174	126+83.85	LB2
2-175	126+92.35	LB2
2-176	127+00.85	LB2
2-177	127+09.35	LB2
2-178	127+17.85	LB2
2-179	127+26.35	LB2
2-180	127+34.85	LB2
2-181	127+43.35	LB2
2-182	127+51.85	LB2
2-183	127+60.35	LB2
2-184	127+68.85	LB2
2-185	127+77.35	LB2
2-186	127+85.85	LB2
2-187	127+94.35	LB2
2-188	128+02.85	LB2
2-189	128+11.35	LB2
2-190	128+19.85	LB2
2-191	128+28.35	LB2
2-192	128+36.85	LB2
2-193	128+45.35	LB2
2-194	128+53.85	LB2
2-195	128+62.35	LB2
2-196	128+70.85	LB2
2-197	128+79.35	LB2
2-198	128+87.85	LB2
2-199	128+96.35	LB2
2-200	129+04.85	LB2
2-201	129+13.35	LB2
2-202	129+21.85	LB2
2-203	129+30.35	LB2
2-204	129+38.85	LB2
2-205	129+47.35	LB2
2-206	129+55.85	LB2
2-207	129+64.35	LB2
2-208	129+72.85	LB2
2-209	129+81.35	LB2
2-210	129+89.85	LB2
2-211	129+98.35	LB2
2-212	130+06.85	LB2
2-213	130+15.35	LB2
2-214	130+23.85	LB2
2-215	130+32.35	LB2
2-216	130+40.85	LB2
2-217	130+49.35	LB2
2-218	130+57.85	LB2
2-219	130+65.60	LB2
2-220	130+69.85	LB2
2-221	130+74.10	LB2
2-222	130+78.35	LB2
2-223	130+82.60	LB2
2-224	130+86.50	LB2
2-225	130+90.40	LB2
2-226	130+94.30	LB2
2-227	130+98.20	LB2
2-228	131+02.10	LB2

LIGHTING J-BOX SCHEDULE ROW 2 - (CONT.)

JB NO.	ROADWAY STATION	TYPE
2-229	131+06.00	LB2
2-230	131+09.90	LB2
2-231	131+16.50	LB2
2-232	131+19.80	LB2
2-233	131+23.10	LB2
2-234	131+26.40	LB2

PS&E SUBMITTAL (11/18/05)
NOT FOR CONSTRUCTION

TUNNEL LIGHTING J-BOX SCHEDULE NO. 2

E10.2

REVISED BY	DATE	DATE REVISED

CALCULATED/DESIGNED BY	A. GOROVAYA
CHECKED BY	M. MAUNG
DESIGN OVERSIGHT	BEHZAD GOLEMOHAMMADI

STATE OF CALIFORNIA - DEPARTMENT OF TRANSPORTATION
Caltrans
ELECTRICAL

LAST REVISION 00-00-00
DATE PLOTTED => 09-NOV-2005
TIME PLOTTED => 15:13

RELATIVE BORDER SCALE IS IN MILLIMETERS 0 20 40 60 80

USERNAME => lGraham
DGN FILE => 41123uza146.dgn

CU 04240

EA 1123U1

DIST	COUNTY	ROUTE	KILOMETER POST TOTAL PROJECT	SHEET No	TOTAL SHEETS
04	SM	1			

Min Maung 9/30/05
REGISTERED ELECTRICAL ENGINEER

PLANS APPROVAL DATE

REGISTERED PROFESSIONAL ENGINEER MIN MAUNG No. E012210 Exp. 09/30/06 ELECT STATE OF CALIFORNIA

The State of California or its officers or agents shall not be responsible for the accuracy or completeness of electronic copies of this plan sheet.

HNTB *Corporation*
200 E. SANDPOINTE AVENUE, SUITE 200
SANTA ANA, CALIFORNIA 92707

Caltrans now has a web site! To get to the web site, go to: http://www.dot.ca.gov

LIGHTING J-BOX SCHEDULE ROW 3

JB NO.	ROADWAY STATION	TYPE
3-001	131+23.50	LB1
3-002	131+21.70	LB1
3-003	131+20.80	LB2
3-004	131+18.10	LB1
3-005	131+16.30	LB1
3-006	131+12.70	LB2
3-007	131+09.80	LB1
3-008	131+08.30	LB1
3-009	131+06.80	LB2
3-010	131+01.70	LB1
3-011	131+00.25	LB1
3-012	130+98.70	LB2
3-013	130+93.60	LB1
3-014	130+92.10	LB1
3-015	130+90.60	LB2
3-016	130+85.50	LB1
3-017	130+84.05	LB1
3-018	130+80.15	LB2
3-019	130+79.60	LB1
3-020	130+75.95	LB1
3-021	130+72.05	LB2
3-022	130+71.50	LB1
3-023	130+67.85	LB1
3-024	130+63.95	LB2
3-025	130+63.40	LB1
3-026	130+59.75	LB1
3-027	130+55.85	LB2
3-028	130+55.30	LB1
3-029	130+51.65	LB1
3-030	130+47.75	LB2
3-031	130+47.20	LB1
3-032	130+43.55	LB1
3-033	130+39.65	LB2
3-034	130+39.10	LB1
3-035	130+35.45	LB1
3-036	130+31.55	LB2
3-037	130+31.00	LB1
3-038	130+27.35	LB1
3-039	130+23.45	LB2
3-040	130+22.90	LB1
3-041	130+19.25	LB1
3-042	130+15.35	LB2
3-043	130+14.80	LB1
3-044	130+11.15	LB1
3-045	130+07.25	LB2
3-046	130+06.70	LB1
3-047	130+03.05	LB1
3-048	129+99.15	LB2
3-049	129+98.60	LB1
3-050	129+94.95	LB1
3-051	129+91.05	LB2
3-052	129+90.50	LB1
3-053	129+85.75	LB1
3-054	129+85.20	LB1
3-055	129+82.75	LB2
3-056	129+79.05	LB1
3-057	129+76.90	LB1

LIGHTING J-BOX SCHEDULE ROW 3 - (CONT.)

JB NO.	ROADWAY STATION	TYPE
3-058	129+74.30	LB2
3-059	129+70.65	LB1
3-060	129+68.45	LB1
3-061	129+65.80	LB2
3-062	129+62.10	LB1
3-063	129+59.90	LB1
3-064	129+57.25	LB2
3-065	129+53.55	LB1
3-066	129+51.35	LB1
3-067	129+48.70	LB2
3-068	129+45.00	LB1
3-069	129+42.80	LB1
3-070	129+40.15	LB2
3-071	129+38.05	LB1
3-072	129+35.30	LB1
3-073	129+31.95	LB2
3-074	129+31.40	LB1
3-075	129+29.15	LB1
3-076	129+26.20	LB1
3-077	129+23.60	LB2
3-078	129+22.75	LB1
3-079	129+19.90	LB1
3-080	129+17.05	LB1
3-081	129+15.35	LB2
3-082	129+13.45	LB1
3-083	129+10.70	LB1
3-084	129+07.65	LB1
3-085	129+07.10	LB2
3-086	129+04.30	LB1
3-087	129+01.35	LB1
3-088	128+98.75	LB2
3-089	128+97.85	LB1
3-090	128+94.90	LB1
3-091	128+92.15	LB1
3-092	128+90.40	LB2
3-093	128+88.30	LB1
3-094	128+84.85	LB1
3-095	128+82.50	LB2
3-096	128+81.75	LB2
3-097	128+78.75	LB2
3-098	128+75.05	LB2
3-099	128+73.30	LB2
3-100	128+71.25	LB2
3-101	128+67.55	LB2
3-102	128+64.80	LB2
3-103	128+63.75	LB2
3-104	128+60.05	LB2
3-105	128+56.30	LB2
3-106	128+52.05	LB2
3-107	128+47.80	LB2
3-108	128+43.55	LB2
3-109	128+39.30	LB2
3-110	128+35.05	LB2
3-111	128+30.80	LB2
3-112	128+26.55	LB2
3-113	128+22.30	LB2
3-114	128+13.80	LB2

LIGHTING J-BOX SCHEDULE ROW 3 - (CONT.)

JB NO.	ROADWAY STATION	TYPE
3-115	128+05.30	LB2
3-116	127+96.80	LB2
3-117	127+88.30	LB2
3-118	127+79.80	LB2
3-119	127+71.30	LB2
3-120	127+62.80	LB2
3-121	127+54.30	LB2
3-122	127+45.80	LB2
3-123	127+37.30	LB2
3-124	127+28.80	LB2
3-125	127+20.30	LB2
3-126	127+11.80	LB2
3-127	127+03.30	LB2
3-128	126+94.80	LB2
3-129	126+86.30	LB2
3-130	126+77.80	LB2
3-131	126+69.30	LB2
3-132	126+60.80	LB2
3-133	126+52.30	LB2
3-134	126+43.80	LB2
3-135	126+35.30	LB2
3-136	126+26.80	LB2
3-137	126+18.30	LB2
3-138	126+09.80	LB2
3-139	126+01.30	LB2
3-140	125+92.80	LB2
3-141	125+84.30	LB2
3-142	125+75.80	LB2
3-143	125+67.30	LB2
3-144	125+58.80	LB2
3-145	125+50.30	LB2
3-146	125+41.80	LB2
3-147	125+33.30	LB2
3-148	125+24.80	LB2
3-149	125+16.30	LB2
3-150	125+07.80	LB2
3-151	124+99.30	LB2
3-152	124+90.80	LB2
3-153	124+82.30	LB2
3-154	124+73.80	LB2
3-155	124+65.30	LB2
3-156	124+56.80	LB2
3-157	124+48.30	LB2
3-158	124+39.80	LB2
3-159	124+31.30	LB2
3-160	124+22.80	LB2
3-161	124+14.30	LB2
3-162	124+05.80	LB2
3-163	123+97.30	LB2
3-164	123+88.80	LB2
3-165	123+80.30	LB2
3-166	123+71.80	LB2
3-167	123+63.30	LB2
3-168	123+54.80	LB2
3-169	123+46.30	LB2
3-170	123+37.80	LB2
3-171	123+29.30	LB2

LIGHTING J-BOX SCHEDULE ROW 3 - (CONT.)

JB NO.	ROADWAY STATION	TYPE
3-172	123+20.80	LB2
3-173	123+12.30	LB2
3-174	123+03.80	LB2
3-175	122+95.30	LB2
3-176	122+86.80	LB2
3-177	122+78.30	LB2
3-178	122+69.80	LB2
3-179	122+61.30	LB2
3-180	122+52.80	LB2
3-181	122+44.30	LB2
3-182	122+35.80	LB2
3-183	122+27.30	LB2
3-184	122+18.80	LB2
3-185	122+10.30	LB2
3-186	122+01.80	LB2
3-187	121+93.30	LB2
3-188	121+84.80	LB2
3-189	121+76.30	LB2
3-190	121+67.80	LB2
3-191	121+59.30	LB2
3-192	121+50.80	LB2
3-193	121+42.30	LB2
3-194	121+33.80	LB2
3-195	121+25.30	LB2
3-196	121+16.80	LB2
3-197	121+08.30	LB2
3-198	120+99.80	LB2
3-199	120+91.30	LB2
3-200	120+82.80	LB2
3-201	120+74.30	LB2
3-202	120+65.80	LB2
3-203	120+57.30	LB2
3-204	120+48.80	LB2
3-205	120+40.30	LB2
3-206	120+31.80	LB2
3-207	120+23.30	LB2
3-208	120+14.80	LB2
3-209	120+06.25	LB2
3-210	119+97.75	LB2
3-211	119+89.25	LB2
3-212	119+80.75	LB2
3-213	119+72.25	LB2
3-214	119+63.75	LB2
3-215	119+55.25	LB2
3-216	119+46.75	LB2
3-217	119+38.25	LB2
3-218	119+29.75	LB2
3-219	119+21.25	LB2
3-220	119+14.25	LB2
3-221	119+08.00	LB2
3-222	119+03.75	LB2
3-223	118+99.50	LB2
3-224	118+95.25	LB2
3-225	118+91.00	LB2
3-226	118+86.75	LB2
3-227	118+82.50	LB2
3-228	118+78.25	LB2

LIGHTING J-BOX SCHEDULE ROW 3 - (CONT.)

JB NO.	ROADWAY STATION	TYPE
3-229	118+74.00	LB2
3-230	118+69.75	LB2
3-231	118+65.50	LB2
3-232	118+61.25	LB2
3-233	118+55.15	LB2
3-234	118+53.70	LB2
3-235	118+50.40	LB2

ALL DIMENSIONS ARE IN MILLIMETERS UNLESS OTHERWISE SHOWN

TUNNEL LIGHTING J-BOX SCHEDULE. NO. 3

E10.3

PS&E SUBMITTAL (11/18/05)
NOT FOR CONSTRUCTION

STATE OF CALIFORNIA - DEPARTMENT OF TRANSPORTATION
Caltrans
ELECTRICAL

DESIGN OVERSIGHT: BEHZAD GOLEMOHAMMADI
CALCULATED/DESIGNED BY: A. GOROVAYA
CHECKED BY: M. MAUNG
DATE: 9/30/05
REVISED BY / DATE REVISED

LAST REVISION 00-00-00
DATE PLOTTED => 09-NOV-2005
TIME PLOTTED => 15:13

RELATIVE BORDER SCALE IS IN MILLIMETERS 0 20 40 60 80

USERNAME => lGraham
DGN FILE => 41123uza147.dgn

CU 04240

EA 1123U1

DIST	COUNTY	ROUTE	KILOMETER POST TOTAL PROJECT	SHEET No	TOTAL SHEETS
04	SM	1			

Min Maung 9/30/05
REGISTERED ELECTRICAL ENGINEER

PLANS APPROVAL DATE

REGISTERED PROFESSIONAL ENGINEER MIN MAUNG No. E012210 Exp. 09/30/06 ELECT STATE OF CALIFORNIA

The State of California or its officers or agents shall not be responsible for the accuracy or completeness of electronic copies of this plan sheet.

HNTB *Corporation*
200 E. SANDPOINTE AVENUE, SUITE 200
SANTA ANA, CALIFORNIA 92707

Caltrans now has a web site! To get to the web site, go to: http://www.dot.ca.gov

LIGHTING J-BOX SCHEDULE ROW 4

JB NO.	ROADWAY STATION	TYPE
4-001	131+13.55	LB1
4-002	131+12.65	LB2
4-003	131+11.75	LB1
4-004	131+08.30	LB1
4-005	131+04.60	LB2
4-006	131+03.70	LB1
4-007	131+00.20	LB1
4-008	130+98.70	LB2
4-009	130+93.60	LB1
4-010	130+92.15	LB1
4-011	130+90.60	LB2
4-012	130+85.50	LB1
4-013	130+84.05	LB1
4-014	130+80.15	LB2
4-015	130+79.60	LB1
4-016	130+75.95	LB1
4-017	130+72.05	LB2
4-018	130+71.50	LB1
4-019	130+67.85	LB1
4-020	130+63.95	LB2
4-021	130+63.40	LB1
4-022	130+59.75	LB1
4-023	130+55.85	LB2
4-024	130+55.30	LB1
4-025	130+51.65	LB1
4-026	130+47.75	LB2
4-027	130+47.20	LB1
4-028	130+43.55	LB1
4-029	130+39.65	LB2
4-030	130+39.10	LB1
4-031	130+35.45	LB1
4-032	130+31.55	LB2
4-033	130+31.00	LB1
4-034	130+27.35	LB1
4-035	130+23.45	LB2
4-036	130+22.90	LB1
4-037	130+19.25	LB1
4-038	130+15.35	LB2
4-039	130+14.80	LB1
4-040	130+11.15	LB1
4-041	130+07.25	LB2
4-042	130+06.70	LB1
4-043	130+03.05	LB1
4-044	129+99.15	LB2
4-045	129+98.60	LB1
4-046	129+94.95	LB1
4-047	129+91.05	LB2
4-048	129+90.50	LB1
4-049	129+85.75	LB1
4-050	129+85.20	LB1
4-051	129+82.75	LB2
4-052	129+79.10	LB1
4-053	129+76.90	LB1
4-054	129+74.25	LB2
4-055	129+70.55	LB1
4-056	129+68.35	LB1
4-057	129+65.70	LB2

LIGHTING J-BOX SCHEDULE ROW 4 - (CONT.)

JB NO.	ROADWAY STATION	TYPE
4-058	129+62.00	LB1
4-059	129+59.80	LB1
4-060	129+57.15	LB2
4-061	129+53.50	LB1
4-062	129+51.30	LB1
4-063	129+48.65	LB2
4-064	129+44.95	LB1
4-065	129+42.75	LB1
4-066	129+40.15	LB2
4-067	129+37.95	LB1
4-068	129+35.20	LB2
4-069	129+31.85	LB2
4-070	129+31.30	LB1
4-071	129+29.10	LB2
4-072	129+26.20	LB1
4-073	129+23.60	LB2
4-074	129+22.75	LB2
4-075	129+19.90	LB1
4-076	129+17.10	LB2
4-077	129+15.35	LB2
4-078	129+13.45	LB1
4-079	129+10.70	LB2
4-080	129+07.60	LB1
4-081	129+07.05	LB2
4-082	129+04.25	LB2
4-083	129+01.35	LB1
4-084	128+98.75	LB2
4-085	128+97.90	LB2
4-086	128+94.95	LB1
4-087	128+92.20	LB2
4-088	128+90.45	LB2
4-089	128+88.35	LB1
4-090	128+84.90	LB2
4-091	128+82.50	LB2
4-092	128+81.75	LB2
4-093	128+78.75	LB2
4-094	128+75.05	LB2
4-095	128+73.30	LB2
4-096	128+71.25	LB2
4-097	128+67.50	LB2
4-098	128+64.75	LB2
4-099	128+63.70	LB2
4-100	128+60.00	LB2
4-101	128+56.25	LB2
4-102	128+52.00	LB2
4-103	128+47.75	LB2
4-104	128+43.50	LB2
4-105	128+39.25	LB2
4-106	128+35.00	LB2
4-107	128+30.75	LB2
4-108	128+26.50	LB2
4-109	128+22.25	LB2
4-110	128+13.75	LB2
4-111	128+05.25	LB2
4-112	127+96.75	LB2
4-113	127+88.25	LB2
4-114	127+79.75	LB2

LIGHTING J-BOX SCHEDULE ROW 4 - (CONT.)

JB NO.	ROADWAY STATION	TYPE
4-115	127+71.25	LB2
4-116	127+62.75	LB2
4-117	127+54.25	LB2
4-118	127+45.75	LB2
4-119	127+37.25	LB2
4-120	127+28.75	LB2
4-121	127+20.25	LB2
4-122	127+11.75	LB2
4-123	127+03.25	LB2
4-124	126+94.75	LB2
4-125	126+86.25	LB2
4-126	126+77.75	LB2
4-127	126+69.25	LB2
4-128	126+60.75	LB2
4-129	126+52.25	LB2
4-130	126+43.75	LB2
4-131	126+35.25	LB2
4-132	126+26.75	LB2
4-133	126+18.25	LB2
4-134	126+09.75	LB2
4-135	126+01.25	LB2
4-136	125+92.75	LB2
4-137	125+84.25	LB2
4-138	125+75.75	LB2
4-139	125+67.25	LB2
4-140	125+58.75	LB2
4-141	125+50.25	LB2
4-142	125+41.75	LB2
4-143	125+33.25	LB2
4-144	125+24.75	LB2
4-145	125+16.25	LB2
4-146	125+07.75	LB2
4-147	124+99.25	LB2
4-148	124+90.75	LB2
4-149	124+82.25	LB2
4-150	124+73.75	LB2
4-151	124+65.25	LB2
4-152	124+56.75	LB2
4-153	124+48.25	LB2
4-154	124+39.75	LB2
4-155	124+31.25	LB2
4-156	124+22.75	LB2
4-157	124+14.25	LB2
4-158	124+05.75	LB2
4-159	123+97.25	LB2
4-160	123+88.75	LB2
4-161	123+80.25	LB2
4-162	123+71.75	LB2
4-163	123+63.25	LB2
4-164	123+54.75	LB2
4-165	123+46.25	LB2
4-166	123+37.75	LB2
4-167	123+29.25	LB2
4-168	123+20.75	LB2
4-169	123+12.25	LB2
4-170	123+03.75	LB2
4-171	122+95.25	LB2

LIGHTING J-BOX SCHEDULE ROW 4 - (CONT.)

JB NO.	ROADWAY STATION	TYPE
4-172	122+86.75	LB2
4-173	122+78.25	LB2
4-174	122+69.75	LB2
4-175	122+61.25	LB2
4-176	122+52.75	LB2
4-177	122+44.25	LB2
4-178	122+35.75	LB2
4-179	122+27.25	LB2
4-180	122+18.75	LB2
4-181	122+10.25	LB2
4-182	122+01.75	LB2
4-183	121+93.25	LB2
4-184	121+84.75	LB2
4-185	121+76.25	LB2
4-186	121+67.75	LB2
4-187	121+59.25	LB2
4-188	121+50.75	LB2
4-189	121+42.25	LB2
4-190	121+33.75	LB2
4-191	121+25.25	LB2
4-192	121+16.75	LB2
4-193	121+08.25	LB2
4-194	120+99.75	LB2
4-195	120+91.25	LB2
4-196	120+82.75	LB2
4-197	120+74.25	LB2
4-198	120+65.75	LB2
4-199	120+57.25	LB2
4-200	120+48.75	LB2
4-201	120+40.25	LB2
4-202	120+31.75	LB2
4-203	120+23.25	LB2
4-204	120+14.75	LB2
4-205	120+06.25	LB2
4-206	119+97.75	LB2
4-207	119+89.25	LB2
4-208	119+80.75	LB2
4-209	119+72.25	LB2
4-210	119+63.75	LB2
4-211	119+55.25	LB2
4-212	119+46.75	LB2
4-213	119+38.25	LB2
4-214	119+29.75	LB2
4-215	119+21.25	LB2
4-216	119+14.25	LB2
4-217	119+08.00	LB2
4-218	119+03.75	LB2
4-219	118+99.50	LB2
4-220	118+95.25	LB2
4-221	118+91.00	LB2
4-222	118+86.75	LB2
4-223	118+82.50	LB2
4-224	118+78.25	LB2
4-225	118+74.00	LB2
4-226	118+69.75	LB2
4-227	118+65.50	LB2
4-228	118+61.25	LB2

LIGHTING J-BOX SCHEDULE ROW 4 - (CONT.)

JB NO.	ROADWAY STATION	TYPE
4-229	118+55.15	LB2
4-230	118+53.70	LB2
4-231	118+50.40	LB2

LIGHTING SUPPLY J-BOX SCHEDULE

BOX NO.	BOX TYPE	DESCRIPTION	LOCATION
JB 5-01	LB3	MEDIUM LEVEL LUMINAIRES	SOUTH PORTAL EXITING
JB 5-02	LB3	24 HOURS LUMINAIRES	SOUTH PORTAL EXITING
JB 5-03	LB3	24 HOURS LUMINAIRES	SOUTH PORTAL EXITING
JB 5-04	LB3	MEDIUM LEVEL LUMINAIRES	SOUTH PORTAL EXITING
JB 5-05	LB3	NIGHTTIME LUMINAIRES	SOUTH PORTAL ENTRANCE
JB 5-06	LB3	LOW LEVEL LUMINAIRES	SOUTH PORTAL ENTRANCE
JB 5-07	LB3	MEDIUM LEVEL LUMINAIRES	SOUTH PORTAL ENTRANCE
JB 5-08	LB3	NIGHTTIME LUMINAIRES	SOUTH PORTAL ENTRANCE
JB 5-09	LB3	LOW LEVEL LUMINAIRES	SOUTH PORTAL ENTRANCE
JB 5-10	LB3	MEDIUM LEVEL LUMINAIRES	SOUTH PORTAL ENTRANCE
JB 6-01	LB3	NIGHTTIME LUMINAIRES	NORTH PORTAL ENTRANCE
JB 6-02	LB3	LOW LEVEL LUMINAIRES	NORTH PORTAL ENTRANCE
JB 6-03	LB3	MEDIUM LEVEL LUMINAIRES	NORTH PORTAL ENTRANCE
JB 6-04	LB3	NIGHTTIME LUMINAIRES	NORTH PORTAL ENTRANCE
JB 6-05	LB3	LOW LEVEL LUMINAIRES	NORTH PORTAL ENTRANCE
JB 6-06	LB3	MEDIUM LEVEL LUMINAIRES	NORTH PORTAL ENTRANCE
JB 6-07	LB3	24 HOURS LUMINAIRES	NORTH PORTAL EXITING
JB 6-08	LB3	MEDIUM LEVEL LUMINAIRES	NORTH PORTAL EXITING
JB 6-09	LB3	MEDIUM LEVEL LUMINAIRES	NORTH PORTAL EXITING
JB 6-10	LB3	24 HOURS LUMINAIRES	NORTH PORTAL EXITING

PS&E SUBMITTAL (11/18/05)
NOT FOR CONSTRUCTION

ALL DIMENSIONS ARE IN MILLIMETERS UNLESS OTHERWISE SHOWN

TUNNEL LIGHTING J-BOX SCHEDULE NO. 4

E10.4

STATE OF CALIFORNIA - DEPARTMENT OF TRANSPORTATION	DESIGN OVERSIGHT	CALCULATED/DESIGNED BY: A. GOROVAYA
Caltrans	BEHZAD GOLEMOHAMMADI	CHECKED BY: M. MAUNG
ELECTRICAL		REVISED BY: DATE REVISED: DATE: 9/30/05

LAST REVISION 00-00-00 | DATE PLOTTED => 09-NOV-2005 | TIME PLOTTED => 15:13

RELATIVE BORDER SCALE IS IN MILLIMETERS 0 20 40 60 80

USERNAME => lGraham
DGN FILE => 41123uza148.dgn

CU 04240 | EA 1123U1

DIST	COUNTY	ROUTE	KILOMETER POST TOTAL PROJECT	SHEET No	TOTAL SHEETS
04	SM	1			

Min Maung 9/30/05
REGISTERED ELECTRICAL ENGINEER

PLANS APPROVAL DATE

REGISTERED PROFESSIONAL ENGINEER
MIN MAUNG
No. E012210
Exp. 09/30/06
ELECT
STATE OF CALIFORNIA

The State of California or its officers or agents shall not be responsible for the accuracy or completeness of electronic copies of this plan sheet.

HNTB *Corporation*
200 E. SANDPOINTE AVENUE, SUITE 200
SANTA ANA, CALIFORNIA 92707

Caltrans now has a web site! To get to the web site, go to: http://www.dot.ca.gov

Caltrans Metric

J-BOX TYPE SCHEDULE

BOX TYPE	DESCRIPTION	TERMINAL BLOCKS
A1	305(W)x457(L)x203(D) EMBEDDED BOX, SS 316L	6 #1, 1 #4
A2		-
B1	305(W)x254(L)x127(D) TYPE 12 METAL BOX	3 #10, 3 #6
C1	203(W)x203(L)x102(D) STRUT MTD BOX, SS 316L	3 #10
C2		2 #8
D1	203(W)x305(L)x203(D) EMBEDDED BOX, SS 316L	3 #6
D2		3 #10
D3		2 #6, 4 #10
D4		3 #8, 3 #12
D5		3 #6, 3 #10
E1	203(W)x203(L)x203(D) EMBEDDED BOX, SS 316L	2 #10
E2		2 #6, 2 #10
E3		-
E4		2 #10, 2 #8
E5		4 #10
E6		2 #8
E7		2 #12
E8		3 #6
E9		3 #8
F1	152(W)x152(L)x203(D) EMBEDDED BOX, SS 316L	2 #10
G1	203(W)x203(L)x102(D) TYPE 12 METAL BOX	-

PS&E SUBMITTAL (11/18/05)
NOT FOR CONSTRUCTION

ALL DIMENSIONS ARE IN MILLIMETERS UNLESS OTHERWISE SHOWN

POWER J-BOX TYPE SCHEDULE

E11.1

STATE OF CALIFORNIA - DEPARTMENT OF TRANSPORTATION
Caltrans **ELECTRICAL**

DESIGN OVERSIGHT: BEHZAD GOLEMOHAMMADI
CALCULATED/DESIGNED BY: P. WHOBREY
CHECKED BY: M. MAUNG
DATE: 9/30/05
REVISED BY
DATE REVISED

LAST REVISION 00-00-00
DATE PLOTTED => 09-NOV-2005
TIME PLOTTED => 15:13

RELATIVE BORDER SCALE IS IN MILLIMETERS 0 20 40 60 80

USERNAME => lGraham
DGN FILE => 41123uza149.dgn

CU 04240

EA 1123U1

DIST	COUNTY	ROUTE	KILOMETER POST TOTAL PROJECT	SHEET No	TOTAL SHEETS
04	SM	1			

Min Maung 9/30/05
REGISTERED ELECTRICAL ENGINEER

PLANS APPROVAL DATE

REGISTERED PROFESSIONAL ENGINEER MIN MAUNG No. E012210 Exp. 09/30/06 ELECT STATE OF CALIFORNIA

The State of California or its officers or agents shall not be responsible for the accuracy or completeness of electronic copies of this plan sheet.

HNTB *Corporation*
200 E. SANDPOINTE AVENUE, SUITE 200
SANTA ANA, CALIFORNIA 92707

Caltrans now has a web site! To get to the web site, go to: http://www.dot.ca.gov

Caltrans Metric

CIRCUIT SCHEDULE

ID NO.	COND. SIZE	HOT WIRE	NEUT. WIRE	GRND. WIRE	SOURCE	LOAD TYPE
PS1-1	53	3 #1	-	#4	MCC-MSMS-2A	Jet Fan - 1
		3 #1	-		MCC-MSMS-3A	Jet Fan - 2
PS1-2	35	3 #3	-	#8	MCC-MSMS-2A	Jet Fan - 1
PS1-3	35	3 #3	-	#8	MCC-MSMS-3A	Jet Fan - 2
PS2-1	53	3 #1	-	#4	MCC-MSMS-4A	Jet Fan - 3
		3 #1	-		MCC-MSMS-5A	Jet Fan - 4
PS2-2	35	3 #3	-	#8	MCC-MSMS-4A	Jet Fan - 3
PS2-3	35	3 #3	-	#8	MCC-MSMS-5A	Jet Fan - 4
PS3-1	53	3 #1	-	#4	MCC-MSMS-2G	Jet Fan - 17
		3 #1	-		MCC-MSMS-3G	Jet Fan - 18
PS3-2	35	3 #3	-	#8	MCC-MSMS-2G	Jet Fan - 17
PS3-3	35	3 #3	-	#8	MCC-MSMS-3G	Jet Fan - 18
PS4-1	53	3 #1	-	#4	MCC-MSMS-4G	Jet Fan - 19
		3 #1	-		MCC-MSMS-5G	Jet Fan - 20
PS4-2	35	3 #3	-	#8	MCC-MSMS-4G	Jet Fan - 19
PS4-3	35	3 #3	-	#8	MCC-MSMS-5G	Jet Fan - 20
PS5-1	27	3 #10	-	#10	PSS1-2,4,6	FIP-1, FIP-2, FIP-3
PS5-2	35	2 #6	#6	#6	PSS2-2,4	V1SB,V2SB
		2 #8	#8		PSS2-1,3	V2NB
PS5-3	35	3 #10	-	#6	PSS1-2,4,6	FIP-1, FIP-2, FIP-3
		2 #6	#6		PSS2-2,4	V1SB,V2SB
PS5-4	27	2 #12	#12	#12	PSS2-2,4	V1SB,V2SB
PS5-5	27	2 #8	#8	#8	PSS2-1,3	V2NB
PS5-6	27	2 #12	#12	#12	PSS2-1,3	V2NB
PS6-1	27	1 #10	#10	#10	PSE2-7	C2NB
		1 #10	#10		PSE2-1	B2NB to B7NB, X1NB to X3NB, W1NB to W3NB
PS6-2	27	1 #10	#10	#10	PSE2-1	B2NB to B7NB, X1NB to X3NB, W1NB to W3NB
PS6-3	27	1 #12	#12	#12	PSE2-1	B2NB to B7NB, X1NB to X3NB, W1NB to W3NB
PS6-4	27	1 #12	#12	#12	PSE2-7	C2NB
PS7-1	35	1 #10	#10	#6	PSE2-2	B2SB to B7SB, X1SB to X3SB, W1SB to W3SB
		1 #6	#6		PSE2-3	C2SB,C3SB
		1 #10	#10		PSE2-5	FIP(E)-1,FIP(E)-2,FIP(E)-3
PS7-2	27	1 #6	#6	#6	PSE2-3	C2SB,C3SB
		1 #10	#10		PSE2-2	B2SB to B7SB, X1SB to X3SB, W1SB to W3SB
PS7-3	27	1 #12	#12	#12	PSE2-5	FIP(E)-1,FIP(E)-2,FIP(E)-3
PS7-4	27	1 #12	#12	#12	PSE2-3	C2SB,C3SB,
PS7-5	27	1 #12	#12	#12	PSE2-2	B2SB to B7NB, X1SB to X3SB, W1SB to W3SB
PS8-1	65	3 #4/0	#4/0	#2	SWBD-SSD-4	PSS1
PS8-2	41	3 #2	-	#8	PSS1-13,15,17	TS1
PS8-3	65	3 #4/0	#4/0	#2	TS1	PSS2
PS9-1	35	3 #2	-	#6	SWBD-SSD-3	UPS-S
PS9-2	27	3 #4	#4	#10	UPS-S	MCC-MSLE
PS9-3	27	3 #6	-	#10	UPS-S	TS2
PS9-4	27	3 #2	#2	#8	TS2	PSE2
PS10-1	91	3 #500 kcmil	#500 kcmil	#3	SWBD-SSD-2	MCC-MSLS
PS11-1	78	3 #300 kcmil	1 #300 kcmil	#1	SWBD-SSD-1	MCC-MSMS
PS12-1	27	3 #8	-	#10	PSS1-8,10,12	HV-1(Heat)
PS13-1	27	3 #12	-	#12	PSS1-14,16,18	HV-1(Fan)
PS14-1	35	3 #8	-	#8	MCC-MSMS-6C	LWP-1
		3 #8			MCC-MSMS-6E	LWP-2

CIRCUIT SCHEDULE

ID NO.	COND. SIZE	HOT WIRE	NEUT. WIRE	GRND. WIRE	SOURCE	LOAD TYPE
PS15-1	27	2 #12	#12	#12	PSE2-4,6	V1NB
PS15-2	27	1 #12	#12	#12	PSS2-14	WEATHERSTN, C1SB
PS15-3	35	1 #12	#12	#8	PSS2-12	C1NB
		2 #8	#8		PSS2-16,18	SOUTH SITE LTG
PS15-4	35	3 #8	-	#8	PSS1-19,21,23	CONTROLLER CABINET
PS15-5	27	2 #12	#12	#12	CONTROLLER CAB	EMS-NB
PS15-6	27	1 #12	#12	#12	CONTROLLER CAB	OVERHT DETECTOR
PS15-7	35	1 #12	#12	#12	PSS2-14	WEATHERSTN, C1SB
PS15-8	53	1 #2/0	#2/0	#4	PSS2-25	TRAFFIC CONTROLLER
PS16-1	27	1 #12	#12	#12	PSS2-8	COMM RACK A
PS16-2	27	1 #12	#12	#12	PSS2-10	COMM RACK B
PS16-3	27	1 #12	#12	#12	PSS2-7	COMM RACK C
PS16-4	27	2 #12	#12	#12	PSS2-9,11	COMM RACK A
PS17-1	27	1 #12	#12	#12	PSE2-8	FACP & LDP
PS18-1	27	1 #12	#12	#12	PSS2-5	TUNNEL CTRL PANEL-S
PC1-1	53	3 #1	-	#4	MCC MCMS1-2A	Jet Fan - 5
		3 #1	-		MCC MCMS1-3A	Jet Fan - 6
PC1-2	35	3 #3	-	#8	MCC MCMS1-2A	Jet Fan - 5
PC1-3	35	3 #3	-	#8	MCC MCMS1-3A	Jet Fan - 6
PC2-1	53	3 #1	-	#4	MCC MCMS1-4A	Jet Fan - 7
		3 #1	-		MCC MCMS1-5A	Jet Fan - 8
PC2-2	35	3 #3	-	#8	MCC MCMS1-4A	Jet Fan - 7
PC2-3	35	3 #3	-	#8	MCC MCMS1-5A	Jet Fan - 8
PC3-1	53	3 #1	-	#4	MCC MCMS2-2A	Jet Fan - 9
		3 #1	-		MCC MCMS2-3A	Jet Fan - 10
PC3-2	35	3 #3	-	#8	MCC MCMS2-2A	Jet Fan - 9
PC3-3	35	3 #3	-	#8	MCC MCMS2-3A	Jet Fan - 10
PC4-1	53	3 #1	-	#4	MCC MCMS2-4A	Jet Fan - 11
		3 #1	-		MCC MCMS2-5A	Jet Fan - 12
PC4-2	35	3 #3	-	#8	MCC MCMS2-4A	Jet Fan - 11
PC4-3	35	3 #3	-	#8	MCC MCMS2-5A	Jet Fan - 12
PC5-1	53	3 #1	-	#4	MCC MCMS1-2G	Jet Fan - 21
		3 #1	-		MCC MCMS1-3G	Jet Fan - 22
PC5-2	35	3 #3	-	#8	MCC MCMS1-2G	Jet Fan - 21
PC5-3	35	3 #3	-	#8	MCC MCMS1-3G	Jet Fan - 22
PC6-1	53	3 #1	-	#4	MCC MCMS1-4G	Jet Fan - 23
		3 #1	-		MCC MCMS1-5G	Jet Fan - 24
PC6-2	35	3 #3	-	#8	MCC MCMS1-4G	Jet Fan - 23
PC6-3	35	3 #3	-	#8	MCC MCMS1-5G	Jet Fan - 24
PC7-1	53	3 #1	-	#4	MCC MCMS2-2G	Jet Fan - 25
		3 #1	-		MCC MCMS2-3G	Jet Fan - 26
PC7-2	35	3 #3	-	#8	MCC MCMS2-2G	Jet Fan - 25
PC7-3	35	3 #3	-	#8	MCC MCMS2-3G	Jet Fan - 26
PC8-1	53	3 #1	-	#4	MCC MCMS2-4G	Jet Fan - 27
		3 #1	-		MCC MCMS2-5G	Jet Fan - 28
PC8-2	35	3 #3	-	#8	MCC MCMS2-4G	Jet Fan - 27
PC8-3	35	3 #3	-	#8	MCC MCMS2-5G	Jet Fan - 28
PC9-1	35	2 #6	#6	#6	PCS2-3,5	V3SB,V4SB
		2 #6	#6		PCS2-2,4	V3NB,V4NB,V5NB
PC9-2	27	3 #10	-	#10	PCS1-2,4,6	FIP-4 to FIP-8
PC9-3	27	2 #6	#6	#6	PCS2-3,5	V3SB,V4SB
PC9-4	35	3 #10	-	#6	PCS1-2,4,6	FIP-4 to FIP-8
		2 #6	#6		PCS2-2,4	V3NB,V4NB,V5NB
PC9-5	27	2 #12	#12	#12	PCS2-2,4	V3NB,V4NB,V5NB
PC9-6	27	2 #12	#12	#12	PCS2-3,5	V3SB,V4SB
PC9-7	27	3 #12	-	#12	PCS1-2,4,6	FIP-4 to FIP-8

PS&E SUBMITTAL (11/18/05)
NOT FOR CONSTRUCTION

ALL DIMENSIONS ARE IN MILLIMETERS UNLESS OTHERWISE SHOWN

CIRCUIT SCHEDULE NO. 1

E11.2

DATE	REVISED BY	DATE REVISED
9/30/05		

CALCULATED/DESIGNED BY: P. WHOBREY
CHECKED BY: M. MAUNG
DESIGN OVERSIGHT: BEHZAD GOLEMOHAMMADI

STATE OF CALIFORNIA - DEPARTMENT OF TRANSPORTATION
Caltrans
ELECTRICAL

LAST REVISION 00-00-00
DATE PLOTTED => 09-NOV-2005
TIME PLOTTED => 15:13

RELATIVE BORDER SCALE IS IN MILLIMETERS 0 20 40 60 80

USERNAME => lGraham
DGN FILE => 41123uza150.dgn

CU 04240

EA 1123U1

DIST	COUNTY	ROUTE	KILOMETER POST TOTAL PROJECT	SHEET No	TOTAL SHEETS
04	SM	1			

Min Maung 9/30/05
REGISTERED ELECTRICAL ENGINEER

PLANS APPROVAL DATE

REGISTERED PROFESSIONAL ENGINEER MIN MAUNG No. E012210 Exp. 09/30/06 ELECT STATE OF CALIFORNIA

The State of California or its officers or agents shall not be responsible for the accuracy or completeness of electronic copies of this plan sheet.

HNTB *Corporation*
200 E. SANDPOINTE AVENUE, SUITE 200
SANTA ANA, CALIFORNIA 92707

Caltrans now has a web site! To get to the web site, go to: http://www.dot.ca.gov

Caltrans Metric

CIRCUIT SCHEDULE

ID NO.	COND. SIZE	HOT WIRE	NEUT. WIRE	GRND WIRE	SOURCE	LOAD TYPE
PC10-1	27	1 #8 1 #10	#8 #10	#8	PCE2-1 PCE2-9	C3NB,C4NB,C5NB B8NB to B17NB, X4NB to X8NB, W4NB to W8NB
PC10-2	27	1 #10	#10	#10	PCE2-9	B8NB to B17NB, X4NB to X8NB, W4NB to W8NB
PC10-3	27	1 #12	#12	#12	PCE2-1	C3NB,C4NB,C5NB
PC10-4	27	1 #12	#12	#12	PCE2-9	B8NB to B17NB, X4NB to X8NB, W4NB to W8NB
PC11-1	27	1 #8 1 #10	#8 #10	#8	PCE2-6 PCE2-2	FIP(E)-4 to FIP(E)-8, C4SB,C5SB B8SB to B17SB, X4SB to X8SB, W4SB to W8SB
PC11-2	27	1 #10 1 #10	#10 #10	#10	PCE2-6 PCE2-2	FIP(E)-4 to FIP(E)-8, C4SB,C5SB B8SB to B17SB, X4SB to X8SB, W4SB to W8SB
PC11-3	27	1 #12	#12	#12	PCE2-6	FIP(E)-4 to FIP(E)-8, C4SB,C5SB
PC11-4	27	1 #12	#12	#12	PCE2-2	B8SB to B17SB, X4SB to X8SB, W4SB to W8SB
PC12-1	41	3 #2	#2	#8	SWBD-SCD-3	PCS1
PC12-2	27	3 #6	-	#10	PCS1-8,10,12	TC1
PC12-3	35	3 #2	#2	#8	TC1	PCS2
PC13-1	35	2 #2	#2	#8	PCS2-13,15	UPS-C
PC13-2	41	1 #2	#2	#8	UPS-C	PCE2
PC14-1	78	3 #300 kcmil	1 #300 kcmil	#1	SWBD-SCD-1and 2	MCC-MCMS1 and MCC-MCMS2
PC15-1	27	3 #8	-	#10	PCS1-1,3,5	HV-2(Heat)
PC16-1	27	3 #12	-	#12	PCS1-7,9,11	HV-2(Fan)
PC17-1	27	2 #12	-	#12	PCS2-10,12	ROLL-UP DOOR SB
PC17-2	27	2 #12	-	#12	PCS2-16,18	ROLL-UP DOOR NB
PC18-1	27	1 #12	#12	#12	PCS2-1	TUNNEL CTRL PANEL-C
PC19-1	27	1 #12	#12	#12	PCS2-6	COMM RACK
PN1-1	53	3 #1 3 #1	- -	#4	MCC MNMS-2A MCC MNMS-3A	Jet Fan - 13 Jet Fan - 14
PN1-2	35	3 #3	-	#8	MCC MNMS-2A	Jet Fan - 13
PN1-3	35	3 #3	-	#8	MCC MNMS-3A	Jet Fan - 14
PN2-1	53	3 #1 3 #1	- -	#4	MCC MNMS-4A MCC MNMS-5A	Jet Fan - 15 Jet Fan - 16
PN2-2	35	3 #3	-	#8	MCC MNMS-4A	Jet Fan - 15
PN2-3	35	3 #3	-	#8	MCC MNMS-5A	Jet Fan - 16
PN3-1	53	3 #1 3 #1	- -	#4	MCC MNMS-2G MCC MNMS-3G	Jet Fan - 29 Jet Fan - 30
PN3-2	35	3 #3	-	#8	MCC MNMS-2G	Jet Fan - 29
PN3-3	35	3 #3	-	#8	MCC MNMS-3G	Jet Fan - 30
PN4-1	53	3 #1 3 #1	- -	#4	MCC MNMS-4G MCC MNMS-5G	Jet Fan - 31 Jet Fan - 32
PN4-2	35	3 #3	-	#8	MCC MNMS-4G	Jet Fan - 31
PN4-3	35	3 #3	-	#8	MCC MNMS-5G	Jet Fan - 32
PN5-1	27	3 #12	-	#12	PNS1-2,4,6	FIP-9,FIP-10
PN5-2	35	2 #8 2 #8	#8 #8	#8	PNS2-2,4 PNS2-13,15	V6NB V5SB
PN5-3	35	3 #12 2 #8	- #8	#8	PNS1-2,4,6 PNS2-2,4	FIP-9,FIP-10 V6NB
PN5-4	27	2 #12	#12	#12	PNS2-2,4	V6NB
PN5-5	27	3 #12	-	#12	PNS1-2,4,6	FIP-9,FIP-10
PN5-6	27	2 #8	#8	#8	PNS2-13,15	V5SB

CIRCUIT SCHEDULE

ID NO.	COND. SIZE	HOT WIRE	NEUT. WIRE	GRND WIRE	SOURCE	LOAD TYPE
PN5-7	27	2 #12	#12	#12	PNS2-13,15	V5SB
PN6-1	27	1 #10 1 #10	#10 #10	#10	PNE2-2 PNE2-6	B18SB to B22SB, X9SB to X10SB, W9SB to W10SB C6SB
PN6-2	27	1 #12	#12	#12	PNE2-2	B18SB to B22SB, X9SB to X10SB, W9SB to W10SB
PN6-3	27	1 #12	#12	#12	PNE2-6	C6SB
PN7-1	27	1 #10 1 #10	#10 #10	#10	PNE2-5 PNE2-4	C6NB,FIP(E)-9,FIP(E)-10 B18NB to B22NB, X9NB to X10NB, W9NB to W10NB
PN7-2	27	1 #12	#12	#12	PNE2-4	B18NB to B21NB, X9NB to X10NB, W9NB to W10NB
PN7-3	27	1 #12	#12	#12	PNE2-5	C6NB,FIP(E)-9,FIP(E)-10
PN8-1	53	3 #2/0	#2/0	#4	SWBD-SND-4	PNS1
PN8-2	41	3 #2	-	#8	PNS1-19,21,23	TN1
PN8-3	65	3 #4/0	#4/0	#2	TN1	PNS2
PN9-1	35	3 #2	-	#6	SWBD-SND-3	UPS-N
PN9-2	27	3 #4	#4	#10	UPS-N	MCC-MNLE
PN9-3	27	3 #6	-	#10	UPS-N	TN2
PN9-4	35	3 #2	#2	#8	TN2	PNE2
PN10-1	91	3 #500 kcmil	#500 kcmil	#3	SWBD-SND-2	MCC-MNLS
PN11-1	78	3 #300 kcmil	1 #300 kcmil	#1	SWBD-SND-1	MCC-MNMS
PN12-1	41	2 #2	-	#8	SWBD-SND-5	TN3
PN12-2	53	2 #2/0	#2/0	#4	TN3	PNS3
PN13-1	27	3 #8	-	#10	SWBD-SND	FIRE PUMP NO.1
PN14-1	27	3 #4	-	#8	SWBD-SND	FIRE PUMP NO.2
PN15-1	27	3 #8	-	#10	PNS1-1,3,5	HV-3(Heat)
PN16-1	27	3 #12	-	#12	PNS1-7,9,11	HV-3(Fan)
PN17-1	27	3 #10	-	#10	PNS1-8,10,12	HV-4(Heat)
PN18-1	27	3 #12	-	#12	PNS1-14,16,18	HV-4(Fan)
PN19-1	53	2 #12	#12	#12	PNE2-1,3	V6SB (VIA PBN1)
PN19-2	53	3 #8	-	#8	PNS1-20,22,24	CONTROLLER CABINET (VIA PBN1)
PN19-3	53	2 #1	#1	#6	PNS3-1,3	PNLBOARD L
PN19-4	53	2 #1 2 #10	#1 2 #10	#6	PNS3-2,4 PNS3-5,7	PNLBOARD R NORTH SITE LTG
PN19-5	27	1 #12 1 #12	#12 #12	#12	CONTROLLER CAB CONTROLLER CAB	WEATHERSTN (VIA EXST PB) CCTV C7SB (VIA EXST PB)
PN19-6	27	1 #12	#12	#12	CONTROLLER CAB	CCTV CAMERA (VIA EXST PB)
PN19-7	27	2 #12	#12	#12	CONTROLLER CAB	EMS-SB
PN19-8	27	1 #12	#12	#12	CONTROLLER CAB	OVERHT DETEC
PN19-9	27	2 #12	#12	#12	PNE2-1,3	V6SB (VIA PBN1)
PN19-10	27	3 #8	-	#8	PNS1-20,22,24	CONTROLLER CABINET (VIA PBN1)
PN19-11	27	1 #12	#12	#12	CONTROLLER CAB	WEATHERSTN (VIA EXST PB)
PN19-12	53	1 #2/0	#2/0	#4	PNS2-23	TRAFFIC CONTROLLER
PN20-1	27	1 #12	#12	#12		TUNNEL CTRL PANEL-N
PN21-1	27	1 #12	#12	#12	PNS2-9	COMM RACK
PN22-1	27	3 #12	-	#12	PNS1-13,15,17	JOCKEY PUMP 1
PN23-1	27	2 #12	-	#12	PNS2-14,16	JOCKEY PUMP 2
PN24-1	21	1 #12	#12	#12	PNS2-11	SUMP PUMP 1

PS&E SUBMITTAL (11/18/05)
NOT FOR CONSTRUCTION

ALL DIMENSIONS ARE IN MILLIMETERS UNLESS OTHERWISE SHOWN

CIRCUIT SCHEDULE NO. 2

E11.3

STATE OF CALIFORNIA - DEPARTMENT OF TRANSPORTATION
Caltrans **ELECTRICAL**

DESIGN OVERSIGHT: BEHZAD GOLEMOHAMMADI
CALCULATED/DESIGNED BY: P. WHOBREY
CHECKED BY: M. MAUNG
REVISED BY: DATE REVISED: DATE: 9/30/05

LAST REVISION 00-00-00
DATE PLOTTED => 09-NOV-2005
TIME PLOTTED => 15:13

RELATIVE BORDER SCALE IS IN MILLIMETERS 0 20 40 60 80
USERNAME => lGraham
DGN FILE => 41123uza151.dgn
CU 04240
EA 1123U1

DIST	COUNTY	ROUTE	KILOMETER POST TOTAL PROJECT	SHEET No	TOTAL SHEETS
04	SM	1			

Min Maung 9/30/05
REGISTERED ELECTRICAL ENGINEER

PLANS APPROVAL DATE

REGISTERED PROFESSIONAL ENGINEER MIN MAUNG No. E012210 Exp. 09/30/06 ELECT STATE OF CALIFORNIA

The State of California or its officers or agents shall not be responsible for the accuracy or completeness of electronic copies of this plan sheet.

HNTB *Corporation*
200 E. SANDPOINTE AVENUE, SUITE 200
SANTA ANA, CALIFORNIA 92707

Caltrans now has a web site! To get to the web site, go to: http://www.dot.ca.gov

Caltrans Metric

PANEL NO. PSS1 | SECTION: OF | Bus: 480 /277 Volts | ☐ Main C.B., AMP
Location: South Equip Chamber | Serving: Normal Power | 3 PH, 4 Wire, 225 AMP | ☒ Main Lugs Only
Fully Rated SC Rating: 10,000 RMS SYM AMPS | ☐ Feed Thru Lugs ☐ SubFeed Lugs | ☒ Neutral ☐ Gnd. Bus | S.U.S.E. I.G. Bus | ☐ Flush Mnt. ☒ Surface Mnt. | ☒ Top Feed ☐ Bot. Feed

Load Type	Circuit Description	CONN KVA	C.B. AMP	C.B. Pole	CKT	PH	CKT	C.B. Pole	C.B. AMP	CONN KVA	Circuit Description	Load Type
	Spare CB		50	3	1	A	2	3	20	3.00	Field Int. Panel (FIP) 1 to 3	M
	Spare CB		-	-	3	B	4	-	-	3.00	-	M
	Spare CB		-	-	5	C	6	-	-	3.00	-	M
	Spare CB		30	3	7	A	8	3	40	6.33	HV-1 (Heater) - 19 kW	H
	Spare CB		-	-	9	B	10	-	-	6.33	-	H
	Spare CB		-	-	11	C	12	-	-	6.33	-	H
N	Transformer TS1 - 75 KVA	11.65	90	3	13	A	14	3	20	2.02	HV-1 (Fan) - 3.75 kW	M
N	-	3.96	-	-	15	B	16	-	-	2.02	-	M
N	-	4.68	-	-	17	C	18	-	-	2.02	-	M
N	Controller Cabinet - South(OVD,EMS-NB)	2.00	20	3	19	A	20	3	30		Spare CB	
N	-	2.00	-	-	21	B	22	-	-		Spare CB	
N	-	2.00	-	-	23	C	24	-	-		Spare CB	
	Spare CB		20	3	25	A	26				Space	
	Spare CB		-	-	27	B	28				Space	
	Spare CB		-	-	29	C	30				Space	
	End of Panel				31	A	32				End of Panel	
					33	B	34					
					35	C	36					
					37	A	38					
					39	B	40					
					41	C	42					

Total Receptacle (R) Load @ 180VA/ea., 100% for first 10,000VA, & 50% for remainder: 0.00 KVA
Total Noncoincident (E) Load 0.00 KVA (Not included in demand load) Total HVAC (H) Load: 18.99 KVA
Total Lighting (L) Load @ 1.25%: 0.00 KVA Total NonContinuous (N) Load: 26.30 KVA
Total Motor (M) Load: 15.06 KVA Largest Motor @ 25%: 5 HP 1.25 KVA

TOTAL CONNECTED LOAD:	CONNECTED AMP Total/Phase	A	B	C	MINIMUM FEEDER CAPACITY
60.35 KVA		91	63	65	61.60 KVA 74.2 A

PANEL NO. PSS2 | SECTION: 1 OF 1 | Bus: 208 /120 Volts | ☒ Main C.B., 225 AMP
Location: South Eqpt Chamber | Serving: Normal Power | 3 PH, 4 Wire, 225 AMP | ☐ Main Lugs Only
Fully Rated SC Rating: 10,000 RMS SYM AMPS | ☐ Feed Thru Lugs ☐ SubFeed Lugs | ☐ ☒ SUSE | ☐ Flush Mnt. ☒ Surface Mnt. | ☐ Top Feed ☒ Bot. Feed

Load Type	Circuit Description	CONN KVA	C.B. AMP	C.B. Pole	CKT	PH	CKT	C.B. Pole	C.B. AMP	CONN KVA	Circuit Description	Load Type
L	Variable Message Sign V2NB	0.57	20	2	1	A	2	2	20	1.14	Variable Message Sign V1SB,V2SB	L
L		0.57	-	-	3	B	4	-	-	1.14		L
N	South Chamber Tunnel Cntrl Panel-01	1.50	20	1	5	C	6	1	20	0.72	South Chamber Recep (Stand-by)	R
R	Quad Receptacle - Comm Rack C	0.64	20	1	7	A	8	1	20	0.36	Quad Receptacle - Comm Rack A	R
R	Quad Recep - Comm Rack A (AM Repeater)	0.25	20	1	9	B	10	1	20	0.51	Quad Receptacle - Comm Rack B	R
R	Quad Recep - Comm Rack A (AM Repeater)	0.25	20	1	11	C	12	1	20	0.71	C1NB - Nbound	L
L	South Chamber Ltg (Stand-by)	0.52	20	1	13	A	14	1	20	0.25	Weatherstn, C1SB	L
	Spare CB		20	1	15	B	16	1	20	1.50	South Site Lighting (by others)	L
	Spare CB		20	1	17	C	18	1	20	1.50	South Site Lighting (by others)	L
	Spare CB		20	1	19	A	20	1	20	0.18	Seismic Eq.	N
	Spare CB		20	1	21	B	22	1	20		Spare CB	
	Spare CB		20	1	23	C	24	1	20		Spare CB	
N	Traffic Controller	8.00	100	1	25	A	26				Space	
	Space				27	B	28				Space	
	Space				29	C	30				Space	
	Space				31	A	32				Space	
	Space				33	B	34				Space	
	Space				35	C	36				Space	
	Space				37	A	38				Space	
	Space				39	B	40				Space	
	Space				41	C	42				Space	

Total Receptacle (R) Load @ 180VA/ea., 100% for first 10,000VA, & 50% for remainder: 2.73 KVA
Total Noncoincident (E) Load 0.00 KVA (Not included in demand load) Total HVAC (H) Load: 0.00 KVA
Total Lighting (L) Load @ 1.25%: 9.86 KVA Total NonContinuous (N) Load: 9.68 KVA
Total Motor (M) Load: 0.00 KVA Largest Motor @ 25%: HP 0.00 KVA

TOTAL CONNECTED LOAD:	CONNECTED AMP Total/Phase	A	B	C	MINIMUM FEEDER CAPACITY
KVA		97	33	39	22.27 KVA 61.9 A

PANEL NO. PSE2 | SECTION: 1 OF 1 | Bus: 208 /120 Volts | ☒ Main C.B., 100 AMP
Location: South Eqpt Chamber | Serving: Emergency Power | 3 PH, 4 Wire, 100 AMP | ☐ Main Lugs Only
Fully Rated SC Rating: 10,000 RMS SYM AMPS | ☐ Feed Thru Lugs ☐ SubFeed Lugs | ☐ ☒ SUSE | ☐ Flush Mnt. ☒ Surface Mnt. | ☐ Top Feed ☒ Bot. Feed

Load Type	Circuit Description	CONN KVA	C.B. AMP	C.B. Pole	CKT	PH	CKT	C.B. Pole	C.B. AMP	CONN KVA	Circuit Description	Load Type
L	Blue, White Lts & Exit Sign - Northbound	0.15	20	1	1	A	2	1	20	0.17	Blue, White Lts & Exit Sign - Sbound	L
L	Camera - C2SB,C3SB	0.45	20	1	3	B	4	2	20	0.57	Changeable Message Sign V1NB	L
L	Field Int Panel (E) - 1 through 3	0.15	20	1	5	C	6	-	-	0.57	-	L
L	Camera - C2NB	0.23	20	1	7	A	8	1	20	0.51	FACP & LDP	N
	Spare CB		20	1	9	B	10	1	20	0.21	South Chamber Emer Lighting	L
R	South Chamber Emer. Receptacle	0.36	20	1	11	C	12	1	20		Spare CB	
	Spare CB		20	1	13	A	14	1	20		Spare CB	
	Spare CB		20	1	15	B	16	1	20		Spare CB	
	Spare CB		20	1	17	C	18	1	20		Spare CB	
	Space				19	A	20				Space	
	Space				21	B	22				Space	
	Space				23	C	24				Space	
	End of Panel				25	A	26				End of Panel	
					27	B	28					
					29	C	30					
					31	A	32					
					33	B	34					
					35	C	36					
					37	A	38					
					39	B	40					
					41	C	42					

Total Receptacle (R) Load @ 180VA/ea., 100% for first 10,000VA, & 50% for remainder: 0.36 KVA
Total Noncoincident (E) Load 0.00 KVA (Not included in demand load) Total HVAC (H) Load: 0.00 KVA
Total Lighting (L) Load @ 1.25%: 3.12 KVA Total NonContinuous (N) Load: 0.51 KVA
Total Motor (M) Load: 0.00 KVA Largest Motor @ 25%: HP 0.00 KVA

TOTAL CONNECTED LOAD:	CONNECTED AMP Total/Phase	A	B	C	MINIMUM FEEDER CAPACITY
3.36 KVA		9	11	9	3.99 KVA 11.1 A

ALL DIMENSIONS ARE IN MILLIMETERS UNLESS OTHERWISE SHOWN

PANEL SCHEDULES NO. 1

E12.1

PS&E SUBMITTAL (11/18/05)
NOT FOR CONSTRUCTION

DATE	REVISED BY	DATE REVISED
9/30/05	M. MAUNG	

CALCULATED/DESIGNED BY: P. WHOBREY
CHECKED BY: M. MAUNG
DESIGN OVERSIGHT: BEHZAD GOLEMOHAMMADI

STATE OF CALIFORNIA - DEPARTMENT OF TRANSPORTATION
Caltrans
ELECTRICAL

LAST REVISION 00-00-00
DATE PLOTTED => 09-NOV-2005
TIME PLOTTED => 15:13

RELATIVE BORDER SCALE IS IN MILLIMETERS 0 20 40 60 80
USERNAME => lGraham
DGN FILE => 41123uza152.dgn
CU 04240
EA 1123U1

DIST	COUNTY	ROUTE	KILOMETER POST TOTAL PROJECT	SHEET No	TOTAL SHEETS
04	SM	1			

Min Maung 9/30/05
REGISTERED ELECTRICAL ENGINEER

PLANS APPROVAL DATE

REGISTERED PROFESSIONAL ENGINEER MIN MAUNG No. E012210 Exp. 09/30/06 ELECT STATE OF CALIFORNIA

The State of California or its officers or agents shall not be responsible for the accuracy or completeness of electronic copies of this plan sheet.

HNTB *Corporation*
200 E. SANDPOINTE AVENUE, SUITE 200
SANTA ANA, CALIFORNIA 92707

Caltrans now has a web site! To get to the web site, go to: http://www.dot.ca.gov

Caltrans Metric

PANEL NO. PCS1 | SECTION: OF | Bus: 480 /277 Volts | ☐ Main C.B., AMP
Location: Center Equip Chamber | Serving: Normal Power | 3 PH, 4 Wire, 100 AMP | ☒ Main Lugs Only
Fully Rated SC Rating: 10,000 RMS SYM AMPS | ☐ Feed Thru Lugs ☐ SubFeed Lugs | ☒ Neutral S.U.S.E. ☐ Gnd. Bus I.G. Bus | ☐ Flush Mnt. ☒ Surface Mnt. | ☒ Top Feed ☐ Bot. Feed

Load Type	Circuit Description	CONN KVA	C.B. AMP	C.B. Pole	CKT	PH	CKT	C.B. Pole	C.B. AMP	CONN KVA	Circuit Description	Load Type
H	HV-2 (Heater) - 19 kW	6.33	40	3	1	A	2	2	20	5.00	Field Int. Panel(FIP) 4 - 8	M
H	-	6.33	-	-	3	B	4	-	-	5.00	-	M
H	-	6.33	-	-	5	C	6	-	-	5.00	-	M
M	HV-2 (Fan) - 3.75 kW	2.02	20	3	7	A	8	3	45	6.80	Transformer TC1 - 30 KVA	N
M	-	2.02	-	-	9	B	10	-	-	4.68	-	N
M	-	2.02	-	-	11	C	12	-	-	4.34	-	N
	Spare CB		20	3	13	A	14	3	30		Spare CB	
	Spare CB		-	-	15	B	16	-	-		Spare CB	
	Spare CB		-	-	17	C	18	-	-		Spare CB	
	Space				19	A	20				Space	
	Space				21	B	22				Space	
	Space				23	C	24				Space	
	End of Panel				25	A	26				End of Panel	
					27	B	28					
					29	C	30					
					31	A	32					
					33	B	34					
					35	C	36					
					37	A	38					
					39	B	40					
					41	C	42					

Total Receptacle (R) Load @ 180VA/ea., 100% for first 10,000VA, & 50% for remainder: 0.00 KVA
Total Noncoincident (E) Load 0.00 KVA (Not included in demand load) Total HVAC (H) Load: 18.99 KVA
Total Lighting (L) Load @ 1.25%: 0.00 KVA Total NonContinuous (N) Load: 15.82 KVA
Total Motor (M) Load: 21.06 KVA Largest Motor @ 25%: 5 HP 1.25 KVA

TOTAL CONNECTED LOAD:	CONNECTED AMP	A	B	C	MINIMUM FEEDER CAPACITY
55.87 KVA	Total/Phase	73	65	64	57.12 KVA 68.8 A

PANEL NO. PCS2 | SECTION: 1 OF 1 | Bus: 208 /120 Volts | ☒ Main C.B., 100 AMP
Location: Center Eqpt Chamber | Serving: Normal Power | 3 PH, 4 Wire, 100 AMP | ☐ Main Lugs Only
Fully Rated SC Rating: 10,000 RMS SYM AMPS | ☐ Feed Thru Lugs ☐ SubFeed Lugs | ☐ ☒ SUSE | ☐ Flush Mnt. ☒ Surface Mnt. | ☐ Top Feed ☒ Bot. Feed

Load Type	Circuit Description	CONN KVA	C.B. AMP	C.B. Pole	CKT	PH	CKT	C.B. Pole	C.B. AMP	CONN KVA	Circuit Description	Load Type
N	Center Chamber Tunnel Contrl Panel-02	1.50	20	2	1	A	2	2	20	1.70	VMS - V3NB,V4NB,V5NB	L
L	Variable Message Sign - V3SB,V4SB	1.14	20	2	3	B	4	-	-	1.70	-	L
L	-	1.14	-	-	5	C	6	1	20	0.64	Quad Recep - Comm Rack	R
L	Center Chamber Lighting	0.52	20	1	7	A	8	1	20		Spare CB	
	Spare CB		20	1	9	B	10	2	20	0.92	Roll Up Door SB	M
R	Center Chamber Receptacle	0.72	20	1	11	C	12	-	-	0.92	-	M
N	UPS-C (15 KVA)	1.54	100	2	13	A	14	1	20		Spare CB	
N	-	1.54	100	-	15	B	16	2	20	0.92	Roll Up Door NB	M
	Spare CB		20	1	17	C	18	-	-	0.92	-	M
	Spare CB		20	1	19	A	20	1	20		Spare CB	
	Spare CB		20	1	21	B	22	1	20		Spare CB	
	Spare CB		20	1	23	C	24	1	20		Spare CB	
	End of Panel				25	A	26				End of Panel	
					27	B	28					
					29	C	30					
					31	A	32					
					33	B	34					
					35	C	36					
					37	A	38					
					39	B	40					
					41	C	42					

Total Receptacle (R) Load @ 180VA/ea., 100% for first 10,000VA, & 50% for remainder: 1.36 KVA
Total Noncoincident (E) Load 0.00 KVA (Not included in demand load) Total HVAC (H) Load: 0.00 KVA
Total Lighting (L) Load @ 1.25%: 7.75 KVA Total NonContinuous (N) Load: 4.58 KVA
Total Motor (M) Load: 3.68 KVA Largest Motor @ 25%: 0.75 HP 0.19 KVA

TOTAL CONNECTED LOAD:	CONNECTED AMP	A	B	C	MINIMUM FEEDER CAPACITY
15.82 KVA	Total/Phase	44	52	37	17.55 KVA 48.8 A

PANEL NO. PCE2 | SECTION: 1 OF 1 | Bus: 120 Volts | ☐ Main C.B., AMP
Location: Center Equip Chamber | Serving: Emergency Power | 1 PH, 2 Wire, 100 AMP | ☒ Main Lugs Only
Integrated Equipment SC Rating 10000 RMS SYM AMPS | ☐ Feed Thru Lugs ☐ SubFeed Lugs | ☐ ☐ Iso. Gnd. Bus | ☐ Flush Mnt. ☒ Surface Mnt. | ☐ Top Feed ☒ Bot. Feed

Load Type	Circuit Description	CONN KVA	C.B. AMP	C.B. Pole	CKT	PH	CKT	C.B. Pole	C.B. AMP	CONN KVA	Circuit Description	Load Type
L	Cameras - C3NB,C4NB,C5NB	0.68	20	1	1	A	2	1	20	0.24	Blue, White Lts & Exit Sign - Sbound	L
	Spare CB		20	1	3	A	4	1	20		Spare CB	
R	Center Chamber Emer. Receptacle	0.36	20	1	5	A	6	1	20	0.70	Field Int. Panel (E), Cam - Sbound	L
N	Seismic Eq.	0.18	20	1	7	A	8	1	20		Spare CB	
L	Blue, White Lts & Exit Sign - Northbound	0.24	20	1	9	A	10	1	20	0.14	Center Chamber Emer. Lights	L
	Spare CB		20	1	11	A	12	1	20		Spare CB	
	Spare CB		20	1	13	A	14	1	20	0.10	Exit Signs, white lts at Emer Crosspassage	L
	Spare CB		20	1	15	A	16	1	20		Spare CB	
	Spare CB		20	1	17	A	18	1	20		Spare CB	
	Spare CB		20	1	19	A	20	1	20		Spare CB	
	Spare CB		20	1	21	A	22	1	20		Spare CB	
	Spare CB		20	1	23	A	24	1	20		Spare CB	
	End of Panel				25	A	26				End of Panel	
					27	A	28					
					29	A	30					
					31	A	32					
					33	A	34					
					35	A	36					
					37	A	38					
					39	A	40					

Total Receptacle (R) Load @ 180VA/ea., 100% for first 10,000VA, & 50% for remainder: 0.36 KVA
Total Noncoincident (E) Load 0.00 KVA (Not included in demand load) Total HVAC (H) Load: 0.00 KVA
Total Lighting (L) Load @ 1.25%: 2.63 KVA Total NonContinuous (N) Load: 0.18 KVA
Total Motor (M) Load: 0.00 KVA Largest Motor: (25% added to demand load): HP 0.00 KVA

TOTAL CONNECTED LOAD:	CONNECTED AMP	A	MINIMUM FEEDER CAPACITY
2.64 KVA	Total/Phase	22	3.17 KVA 13.2 A

PS&E SUBMITTAL (11/18/05)
NOT FOR CONSTRUCTION

ALL DIMENSIONS ARE IN MILLIMETERS UNLESS OTHERWISE SHOWN

PANEL SCHEDULES NO. 2

E12.2

DATE	REVISED BY	DATE REVISED
9/30/05	M. MAUNG	

CALCULATED/DESIGNED BY: P. WHOBREY
CHECKED BY: M. MAUNG
DESIGN OVERSIGHT: BEHZAD GOLEMOHAMMADI

STATE OF CALIFORNIA - DEPARTMENT OF TRANSPORTATION
Caltrans
ELECTRICAL

LAST REVISION 00-00-00 | DATE PLOTTED => 09-NOV-2005 | TIME PLOTTED => 15:13

RELATIVE BORDER SCALE IS IN MILLIMETERS 0 20 40 60 80

USERNAME => lGraham
DGN FILE => 41123uza153.dgn

CU 04240 | EA 1123U1

DIST	COUNTY	ROUTE	KILOMETER POST TOTAL PROJECT	SHEET No	TOTAL SHEETS
04	SM	1			

Min Maung 9/30/05
REGISTERED ELECTRICAL ENGINEER

PLANS APPROVAL DATE

REGISTERED PROFESSIONAL ENGINEER MIN MAUNG No. E012210 Exp. 09/30/06 ELECT STATE OF CALIFORNIA

The State of California or its officers or agents shall not be responsible for the accuracy or completeness of electronic copies of this plan sheet.

HNTB *Corporation*
200 E. SANDPOINTE AVENUE, SUITE 200
SANTA ANA, CALIFORNIA 92707

Caltrans now has a web site! To get to the web site, go to: http://www.dot.ca.gov

Caltrans Metric

PANEL NO. PNS1 | SECTION: OF | Bus: 480 /277 Volts | ☐ Main C.B., AMP
Location: North Equip Chamber | Serving: Normal Power | 3 PH, 4 Wire, 225 AMP | ☒ Main Lugs Only
Fully Rated SC Rating: 10,000 RMS SYM AMPS | ☐ Feed Thru Lugs ☐ SubFeed Lugs | ☒ Neutral ☒ Gnd. Bus | S.U.S.E. I.G. Bus | ☐ Flush Mnt. ☒ Surface Mnt. | ☒ Top Feed ☐ Bot. Feed

Load Type	Circuit Description	CONN KVA	C.B. AMP	C.B. Pole	CKT	PH	C.B. CKT	C.B. Pole	C.B. AMP	CONN KVA	Circuit Description	Load Type
H	HV-3 (Heater) - 19 kW	6.33	40	3	1	A	2	3	20	2.00	Field Int. Panel (FIP) - 9 to 10	M
H	-	6.33	-	-	3	B	4	-	-	2.00	-	M
H	-	6.33	-	-	5	C	6	-	-	2.00	-	M
M	HV-3 (Fan) - 3.75 kW	2.02	20	3	7	A	8	3	30	3.00	HV-4 (Heater) - 9 kW	H
M	-	2.02	-	-	9	B	10	-	-	3.00	-	H
M	-	2.02	-	-	11	C	12	-	-	3.00	-	H
N	North Site - JP 1 0.75 kW	0.47	15	3	13	A	14	3	20	0.90	HV-4 (Fan) -1.5 kW	M
N	-	0.47	-	-	15	B	16	-	-	0.90	-	M
N	-	0.47	-	-	17	C	18	-	-	0.90	-	M
N	Transformer TN1 - 75 KVA	2.96	90	3	19	A	20	3	20	2.00	Contlr Cab-(C7SB,WStn,OVD,EMS-SB)	N
N	-	3.48	-	-	21	B	22	-	-	2.00	-	N
N	-	10.63	-	-	23	C	24	-	-	2.00	-	N
	Space				25	A	26	3	20		Spare CB	
	Space				27	B	28	-	-		Spare CB	
	Space				29	C	30	-	-		Spare CB	
	End of Panel				31	A	32				End of Panel	
					33	B	34					
					35	C	36					
					37	A	38					
					39	B	40					
					41	C	42					

Total Receptacle (R) Load @ 180VA/ea., 100% for first 10,000VA, & 50% for remainder: 0.00 KVA
Total Noncoincident (E) Load 0.00 KVA (Not included in demand load) | Total HVAC (H) Load: 27.99 KVA
Total Lighting (L) Load @ 1.25%: 0.00 KVA | Total NonContinuous (N) Load: 24.48 KVA
Total Motor (M) Load: 14.76 KVA | Largest Motor @ 25%: 5 HP 1.25 KVA

TOTAL CONNECTED LOAD:	CONNECTED AMP	A	B	C	MINIMUM FEEDER CAPACITY
67.23 KVA	Total/Phase	71	73	99	68.48 KVA 82.5 A

PANEL NO. PNS2 | SECTION: 1 OF 1 | Bus: 208 /120 Volts | ☒ Main C.B., 225 AMP
Location: North Eqpt Chamber | Serving: Normal Power | 3 PH, 4 Wire, 225 AMP | ☐ Main Lugs Only
Fully Rated SC Rating: 10,000 RMS SYM AMPS | ☐ Feed Thru Lugs ☐ SubFeed Lugs | ☐ ☒ SUSE | ☐ Flush Mnt. ☒ Surface Mnt. | ☐ Top Feed ☒ Bot. Feed

Load Type	Circuit Description	CONN KVA	C.B. AMP	C.B. Pole	CKT	PH	C.B. CKT	C.B. Pole	C.B. AMP	CONN KVA	Circuit Description	Load Type
R	North Chamber Receptacle	0.90	20	1	1	A	2	2	20	0.57	Variable Message Sign - V6NB	L
L	North Chamber Lighting	0.78	20	1	3	B	4	-	-	0.57		L
N	North Chamber Tunnel Cntrl Panel-03	1.50	20	1	5	C	6	1	20		Spare CB	
	Spare CB		20	1	7	A	8	1	20		Spare CB	
R	Quad Recep - Comm Rack	0.64	20	1	9	B	10	1	20		Spare CB	
M	Sump Pump -1	1.13	20	1	11	C	12	1	20		Spare CB	
L	Variable Message Sign - V5SB	0.57	20	2	13	A	14	2	20	0.92	North Site JP-2	N
L		0.57	-	-	15	B	16	-	-	0.92		N
	Spare CB		20	1	17	C	18	1	20		Spare CB	
	Space				19	A	20	1	20		Spare CB	
	Space				21	B	22				Space	
N	Traffic Controller	8.00	100	1	23	C	24				Space	
	End of Panel				25	A	26				End of Panel	
					27	B	28					
					29	C	30					
					31	A	32					
					33	B	34					
					35	C	36					
					37	A	38					
					39	B	40					
					41	C	42					

Total Receptacle (R) Load @ 180VA/ea., 100% for first 10,000VA, & 50% for remainder: 1.54 KVA
Total Noncoincident (E) Load 0.00 KVA (Not included in demand load) | Total HVAC (H) Load: 0.00 KVA
Total Lighting (L) Load @ 1.25%: 3.83 KVA | Total NonContinuous (N) Load: 11.34 KVA
Total Motor (M) Load: 1.13 KVA | Largest Motor @ 25%: 1 HP 0.25 KVA

TOTAL CONNECTED LOAD:	CONNECTED AMP	A	B	C	MINIMUM FEEDER CAPACITY
17.07 KVA	Total/Phase	25	29	89	18.09 KVA 50.3 A

PANEL NO. PNE2 | SECTION: 1 OF 1 | Bus: 208 /120 Volts | ☒ Main C.B., 30 AMP
Location: North Eqpt Chamber | Serving: Emergency Power | 3 PH, 4 Wire, 100 AMP | ☐ Main Lugs Only
Fully Rated SC Rating: 10,000 RMS SYM AMPS | ☐ Feed Thru Lugs ☐ SubFeed Lugs | ☐ ☒ SUSE | ☐ Flush Mnt. ☒ Surface Mnt. | ☐ Top Feed ☒ Bot. Feed

Load Type	Circuit Description	CONN KVA	C.B. AMP	C.B. Pole	CKT	PH	C.B. CKT	C.B. Pole	C.B. AMP	CONN KVA	Circuit Description	Load Type
L	Changeable Message Sign - V6SB	0.57	20	1	1	A	2	1	20	0.12	Blue, White Lts & Exit Sign - Sbound	L
L	-	0.57	-	-	3	B	4	1	20	0.13	Blue, White Lts & Exit Sign - Nbound	L
L	Field Int. Panel (E) & C6NB - Nbound	0.33	20	1	5	C	6	1	20		Spare CB	
	Spare CB		20	1	7	A	8	1	20	0.28	North Chamber Emer. Lighting	L
N	Seismic Eq.	0.18	20	1	9	B	10	1	20		Spare CB	
R	North Chamber Emer. Recep	0.36	20	1	11	C	12	1	20		Spare CB	
	End of Panel				13	A	14				End of Panel	
					15	B	16					
					17	C	18					
					19	A	20					
					21	B	22					
					23	C	24					
					25	A	26					
					27	B	28					
					29	C	30					
					31	A	32					
					33	B	34					
					35	C	36					
					37	A	38					
					39	B	40					
					41	C	42					

Total Receptacle (R) Load @ 180VA/ea., 100% for first 10,000VA, & 50% for remainder: 0.36 KVA
Total Noncoincident (E) Load 0.00 KVA (Not included in demand load) | Total HVAC (H) Load: 0.00 KVA
Total Lighting (L) Load @ 1.25%: 2.50 KVA | Total NonContinuous (N) Load: 0.18 KVA
Total Motor (M) Load: 0.00 KVA | Largest Motor @ 25%: HP 0.00 KVA

TOTAL CONNECTED LOAD:	CONNECTED AMP	A	B	C	MINIMUM FEEDER CAPACITY
2.54 KVA	Total/Phase	9	8	6	3.04 KVA 8.4 A

PS&E SUBMITTAL (11/18/05)
NOT FOR CONSTRUCTION

ALL DIMENSIONS ARE IN MILLIMETERS UNLESS OTHERWISE SHOWN

PANEL SCHEDULES NO. 3

E12.3

	DATE	REVISED BY	DATE REVISED
CALCULATED/DESIGNED BY	P. WHOBREY	CHECKED BY	M. MAUNG
DESIGN OVERSIGHT	BEHZAD GOLEMOHAMMADI		

STATE OF CALIFORNIA - DEPARTMENT OF TRANSPORTATION
Caltrans
ELECTRICAL

LAST REVISION 00-00-00 | DATE PLOTTED => 09-NOV-2005 TIME PLOTTED => 15:13

RELATIVE BORDER SCALE IS IN MILLIMETERS 0 20 40 60 80 | USERNAME => lGraham DGN FILE => 41123uza154.dgn | CU 04240 | EA 1123U1

PANEL NO. PNS3	SECTION: 1 OF 1	Bus: 120 /240 Volts	[X] Main C.B., 225 AMP
Location: North Equip Chamber	Serving: Normal Power	1 PH, 3 Wire, 225 AMP	[ ] Main Lugs Only

Integrated Equipment SC Rating 10,000 RMS SYM AMPS | [ ] Feed Thru Lugs [ ] SubFeed Lugs | [ ] [X] SUSE | [ ] Flush Mnt. [X] Surface Mnt. | [ ] Top Feed [X] Bot. Feed

Load Type	Circuit Description	CONN KVA	C.B. AMP	C.B. Pole	CKT	PH	CKT	C.B. Pole	C.B. AMP	CONN KVA	Circuit Description	Load Type
L	Panel L (Bridge Ltg - North Site)	2.34	100	2	1	A	2	2	100	1.74	Panel R (Bridge Ltg - North Site)	L
L	-	1.94	-	-	3	B	4	-	-	1.34	-	L
L	North Site Lighting	1.50	20	1	5	A	6	1	20		Spare CB	
L	North Site Lighting	1.50	20	1	7	B	8	1	20		Spare CB	
	Spare CB		20	1	9	A	10	1	20		Spare CB	
	Spare CB		20	1	11	B	12	1	20		Spare CB	
	Spare CB		20	1	13	A	14	1	20		Spare CB	
	Spare CB		20	1	15	B	16	1	20		Spare CB	
	Space				17	A	18				Space	
	Space				19	B	20				Space	
	Space				21	A	22				Space	
	Space				23	B	24				Space	
	End of Panel				25	A	26				End of Panel	
					27	B	28					
					29	A	30					
					31	B	32					
					33	A	34					
					35	B	36					
					37	A	38					
					39	B	40					

Total Receptacle (R) Load @ 180VA/ea., 100% for first 10,000VA, & 50% for remainder: 0.00 KVA
Total Noncoincident (E) Load 0.00 KVA (Not included in demand load) Total HVAC (H) Load: 0.00 KVA
Total Lighting (L) Load @ 1.25%: 12.95 KVA Total NonContinuous (N) Load: 0.00 KVA
Total Motor (M) Load: 0.00 KVA Largest Motor: (25% added to demand load): HP 0.00 KVA

TOTAL CONNECTED LOAD:	CONNECTED AMP	A	B	MINIMUM FEEDER CAPACITY	
10.36 KVA	Total/Phase	47	40	12.95 KVA	54.0 A

Caltrans Metric

DIST	COUNTY	ROUTE	KILOMETER POST TOTAL PROJECT	SHEET No	TOTAL SHEETS
04	SM	1			

Min Maung 9/30/05
REGISTERED ELECTRICAL ENGINEER

PLANS APPROVAL DATE

REGISTERED PROFESSIONAL ENGINEER MIN MAUNG No. E012210 Exp. 09/30/06 ELECT STATE OF CALIFORNIA

The State of California or its officers or agents shall not be responsible for the accuracy or completeness of electronic copies of this plan sheet.

HNTB *Corporation*
200 E. SANDPOINTE AVENUE, SUITE 200
SANTA ANA, CALIFORNIA 92707

Caltrans now has a web site! To get to the web site, go to: http://www.dot.ca.gov

REVISED BY	DATE	DATE REVISED

CALCULATED/DESIGNED BY	CHECKED BY
P. WHOBREY	M. MAUNG

DESIGN OVERSIGHT
BEHZAD GOLEMOHAMMADI

STATE OF CALIFORNIA - DEPARTMENT OF TRANSPORTATION
Caltrans **ELECTRICAL**

PS&E SUBMITTAL (11/18/05)
NOT FOR CONSTRUCTION

ALL DIMENSIONS ARE IN MILLIMETERS UNLESS OTHERWISE SHOWN

PANEL SCHEDULES NO. 4

E12.4

LAST REVISION 00-00-00
DATE PLOTTED => 09-NOV-2005
TIME PLOTTED => 15:14

RELATIVE BORDER SCALE IS IN MILLIMETERS 0 20 40 60 80

USERNAME => lGraham
DGN FILE => 41123uza155.dgn

CU 04240 EA 1123U1

DIST	COUNTY	ROUTE	KILOMETER POST TOTAL PROJECT	SHEET No	TOTAL SHEETS
04	SM	1			

Min Maung 9/30/05
REGISTERED ELECTRICAL ENGINEER

PLANS APPROVAL DATE

REGISTERED PROFESSIONAL ENGINEER MIN MAUNG No. E012210 Exp. 09/30/06 ELECT STATE OF CALIFORNIA

The State of California or its officers or agents shall not be responsible for the accuracy or completeness of electronic copies of this plan sheet.

HNTB *Corporation*
200 E. SANDPOINTE AVENUE, SUITE 200
SANTA ANA, CALIFORNIA 92707

Caltrans now has a web site! To get to the web site, go to: http://www.dot.ca.gov

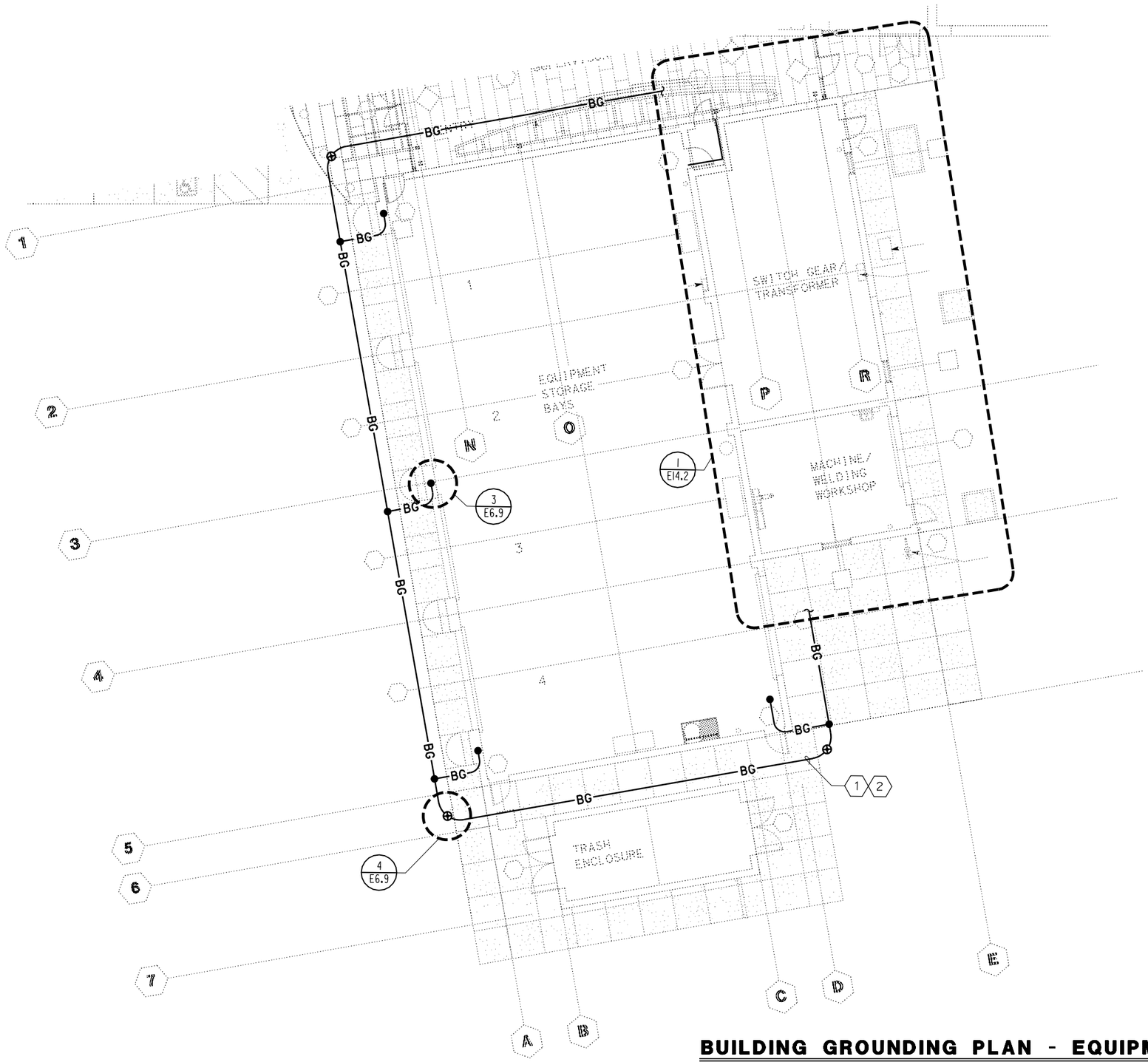

SHEET NOTES:

1. ALL LOOP AND RISERS TO BE #2/0 BC.
2. INSTALL LOOP 1524 AWAY FROM BUILDING STRUCTURE.

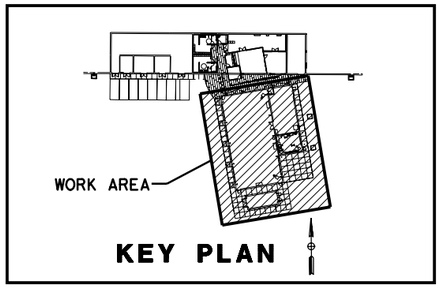

BUILDING GROUNDING PLAN - EQUIPMENT BAYS

ALL DIMENSIONS ARE IN MILLIMETERS UNLESS OTHERWISE SHOWN

OMC GROUNDING PLAN

SCALE 1:100

E14.1

PS&E SUBMITTAL (11/18/05)
NOT FOR CONSTRUCTION

STATE OF CALIFORNIA - DEPARTMENT OF TRANSPORTATION
Caltrans
ELECTRICAL

DESIGN OVERSIGHT: BEHZAD GOLEMOHAMMADI

CALCULATED/DESIGNED BY: P. WHOBREY
CHECKED BY: M. MAUNG

REVISED BY	DATE	DATE REVISED
	9/30/05	

LAST REVISION 00-00-00 | DATE PLOTTED => 09-NOV-2005 | TIME PLOTTED => 15:14

RELATIVE BORDER SCALE IS IN MILLIMETERS 0 20 40 60 80

USERNAME => lGraham
DGN FILE => 41123uza156.dgn

CU 04240 | EA 1123U1

DIST	COUNTY	ROUTE	KILOMETER POST TOTAL PROJECT	SHEET No	TOTAL SHEETS
04	SM	1			

Min Maung 9/30/05
REGISTERED ELECTRICAL ENGINEER

PLANS APPROVAL DATE

REGISTERED PROFESSIONAL ENGINEER MIN MAUNG No. E012210 Exp. 09/30/06 ELECT STATE OF CALIFORNIA

The State of California or its officers or agents shall not be responsible for the accuracy or completeness of electronic copies of this plan sheet.

HNTB *Corporation*
200 E. SANDPOINTE AVENUE, SUITE 200
SANTA ANA, CALIFORNIA 92707

Caltrans now has a web site! To get to the web site, go to: http://www.dot.ca.gov

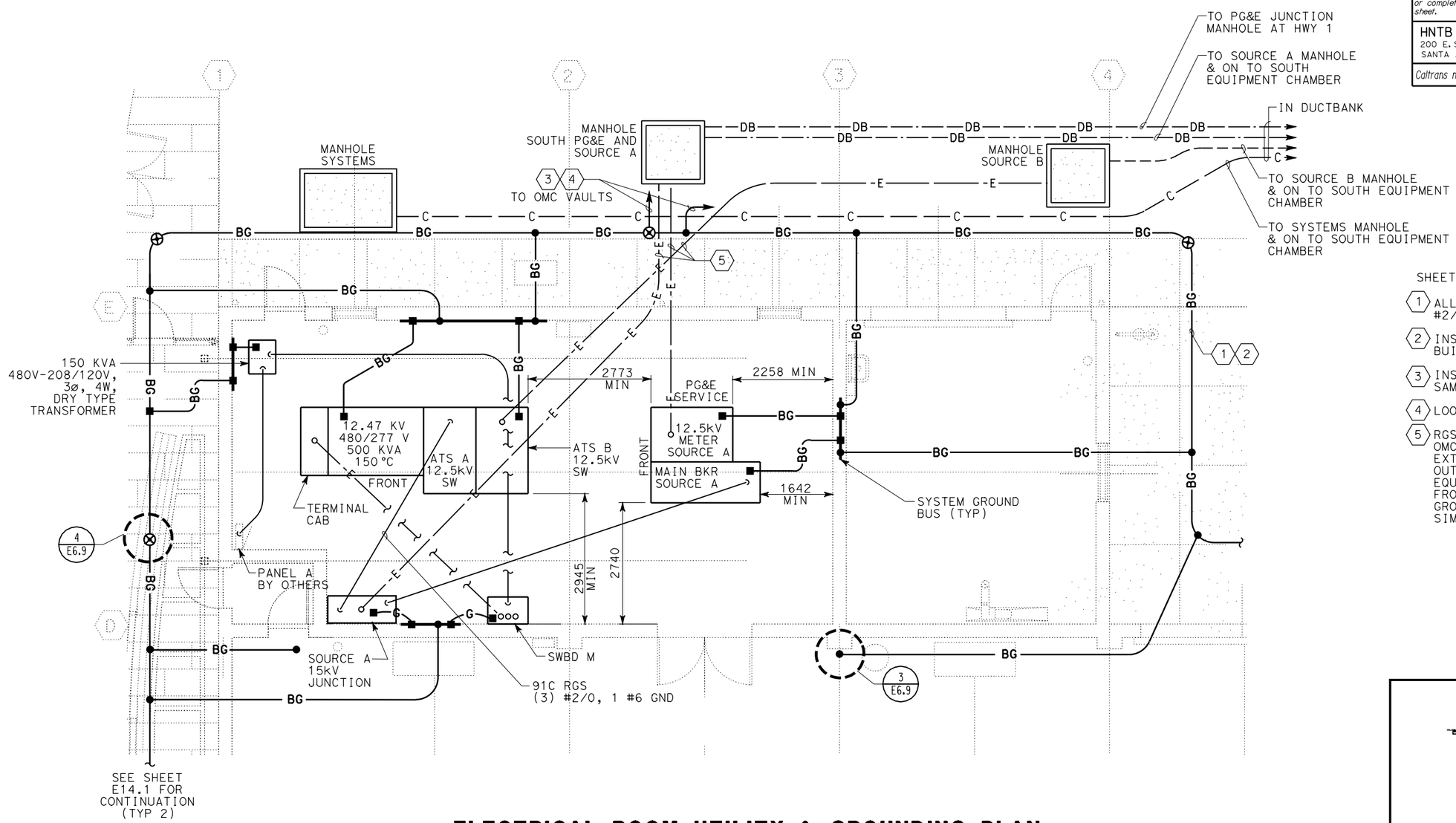

1 ELECTRICAL ROOM UTILITY & GROUNDING PLAN

SHEET NOTES:

1. ALL LOOP AND RISERS TO BE #2/0 BC.
2. INSTALL LOOP 1524 AWAY FROM BUILDING STRUCTURE.
3. INSTALL DUCT BANK GROUND IN SAME TRENCH AS DUCTS.
4. LOOP 2/0 BC IN EACH MV VAULT.
5. RGS CONDUIT COMING OUT OF OMC BUILDING STRUCTURE SHALL EXTEND UP TO 1676 AWAY OF THE OUTSIDE BUILDING WALL. INSTALL EQUIPMENT GROUND IN EACH DUCT FROM VAULT GROUND TO EQUIPMENT GROUND BUS AND BOND CONDUIT SIMILAR TO DETAIL B, E8.1.

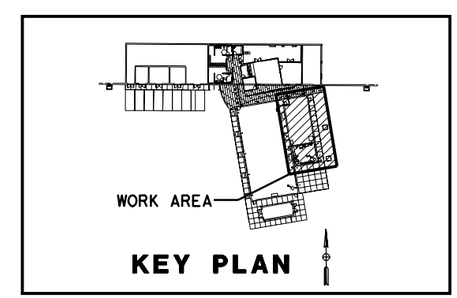

ALL DIMENSIONS ARE IN MILLIMETERS UNLESS OTHERWISE SHOWN

OMC UTILITY AND GROUNDING PLAN

SCALE 1:50

E14.2

PS&E SUBMITTAL (11/18/05)
NOT FOR CONSTRUCTION

CALCULATED/DESIGNED BY	P. WHOBREY	DATE	REVISED BY
CHECKED BY	M. MAUNG	9/30/05	DATE REVISED

DESIGN OVERSIGHT: BEHZAD GOLEMOHAMMADI

STATE OF CALIFORNIA - DEPARTMENT OF TRANSPORTATION
Caltrans
ELECTRICAL

LAST REVISION 00-00-00 | DATE PLOTTED => 09-NOV-2005 | TIME PLOTTED => 15:14

RELATIVE BORDER SCALE IS IN MILLIMETERS 0 20 40 60 80

USERNAME => lGraham
DGN FILE => 41123uza157.dgn

CU 04240 | EA 1123U1

DIST	COUNTY	ROUTE	KILOMETER POST TOTAL PROJECT	SHEET No	TOTAL SHEETS
04	SM	1			

Min Maung 9/30/05
REGISTERED ELECTRICAL ENGINEER

PLANS APPROVAL DATE

REGISTERED PROFESSIONAL ENGINEER MIN MAUNG No. E012210 Exp. 09/30/06 ELECT STATE OF CALIFORNIA

The State of California or its officers or agents shall not be responsible for the accuracy or completeness of electronic copies of this plan sheet.

HNTB *Corporation*
200 E. SANDPOINTE AVENUE, SUITE 200
SANTA ANA, CALIFORNIA 92707

Caltrans now has a web site! To get to the web site, go to: http://www.dot.ca.gov

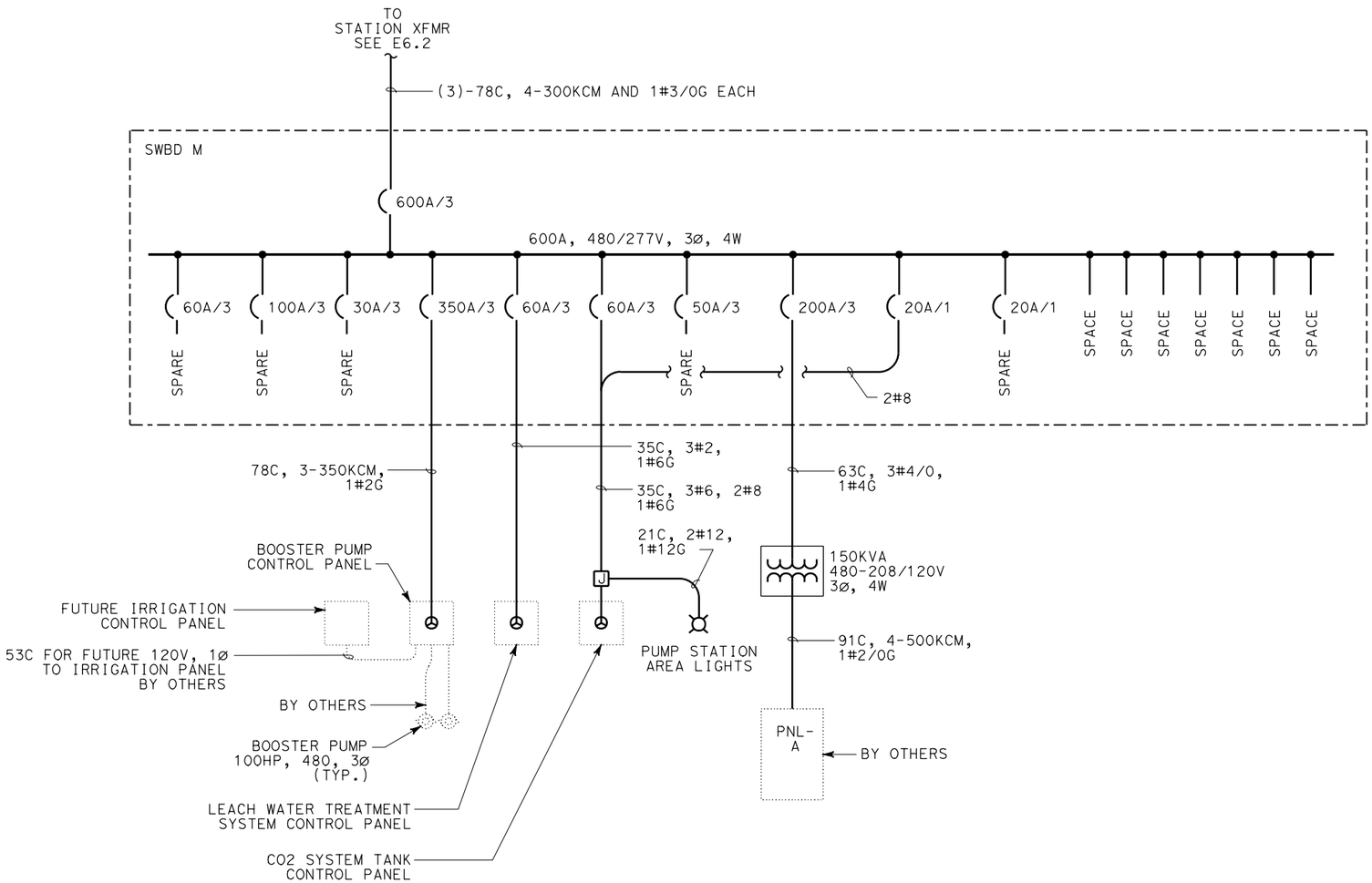

1 ONE-LINE DIAGRAM
NO SCALE

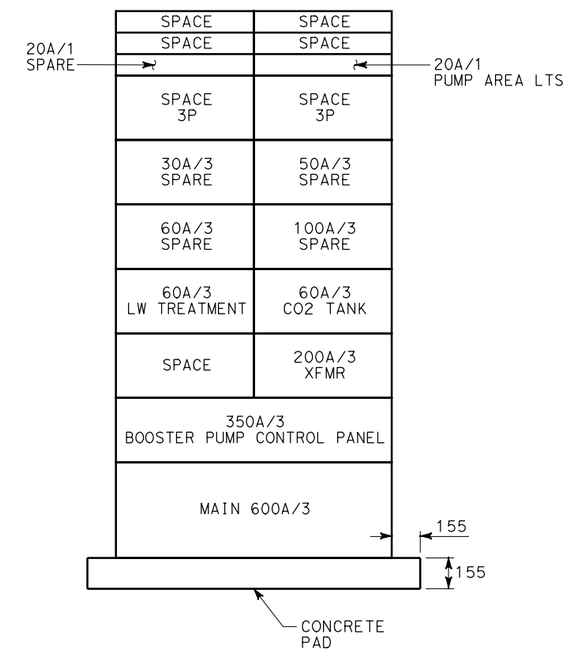

A ELEVATION
NO SCALE

ALL DIMENSIONS ARE IN
MILLIMETERS UNLESS OTHERWISE SHOWN

OMC, SWITCHBOARD M ONE-LINE DIAGRAM AND ELEVATION

SCALE AS SHOWN

E14.3

PS&E SUBMITTAL (11/18/05)
NOT FOR CONSTRUCTION

	REVISED BY	DATE	DATE REVISED
CALCULATED/DESIGNED BY	A. GOROVAYA	DATE	9/30/05
CHECKED BY	M. MAUNG		
DESIGN OVERSIGHT	BEHZAD GOLEMOHAMMADI		

STATE OF CALIFORNIA - DEPARTMENT OF TRANSPORTATION
Caltrans
ELECTRICAL

LAST REVISION 00-00-00
DATE PLOTTED => 09-NOV-2005
TIME PLOTTED => 15:14