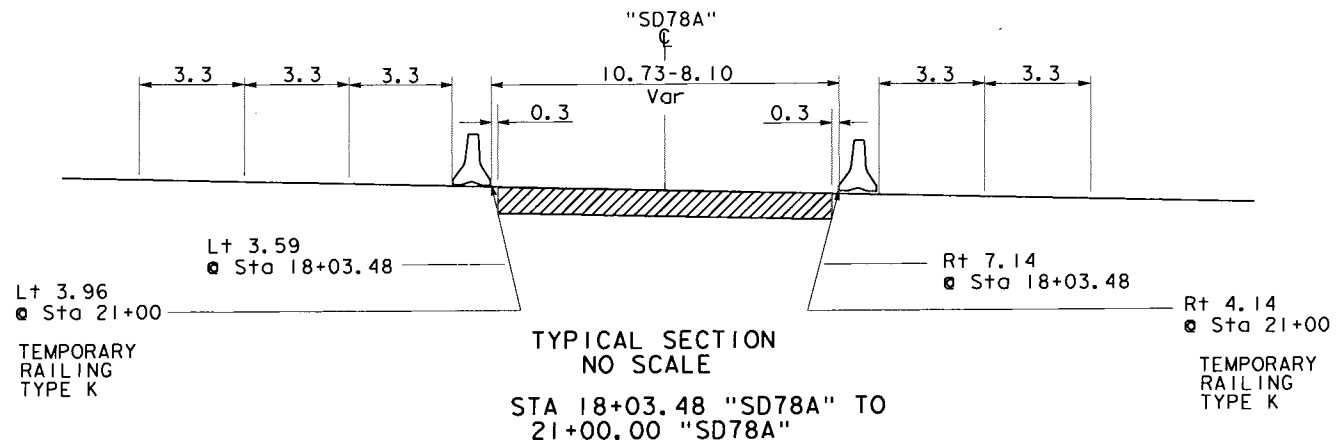

TYPICAL SECTION
NO SCALE

STA 18+03.48 "SD78A" TO
21+00.00 "SD78A"

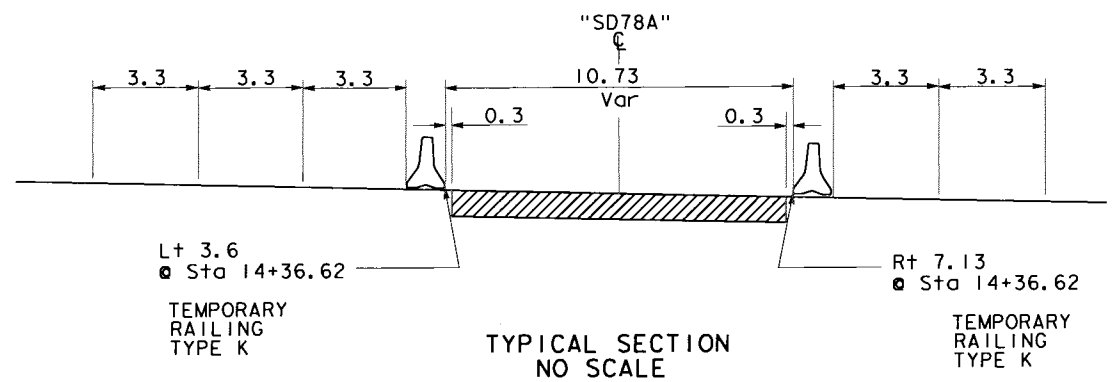

TYPICAL SECTION
NO SCALE

STA 14+36.62 "SD78A" TO
18+03.48 "SD78A"

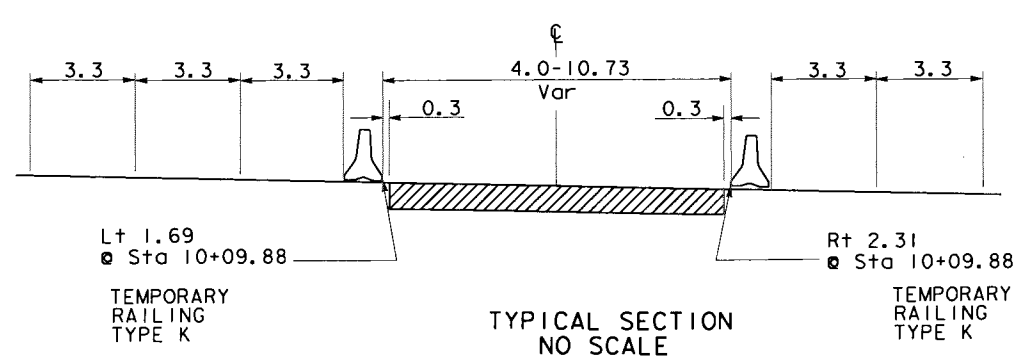

TYPICAL SECTION
NO SCALE

STA 10+09.88 "SD78A" TO
14+36.62 "SD78A"