Traffic Incident Management Guidelines

STATE OF CALIFORNIA

CALIFORNIA STATE TRANSPORTATION AGENCY

DEPARTMENT OF TRANSPORTATION

2014

PREFACE

This edition of the Traffic Incident Management Guidelines is intended as a guide to be used by traffic incident responders to facilitate decision making in the field. The goal is for law enforcement, Emergency Medical Services (EMS), California Department of Transportation (Caltrans) and other response personnel that respond to incidents on California highways to be dispatched as quickly as possible and to respond to the scene and clear the incident from the travelled way and the right-of-way as quickly and safely as possible to limit the exposure of the travelling public and the incident responders at the scene of the incident.

Disclaimer: These guidelines are not intended as, nor do they establish, a legal standard. These guidelines are subject to amendment as conditions and experience warrant. Certain situations may call for variations from these guidelines, subject to the approval called for herein.

The publication of these guidelines do not create or impose any standard of conduct or duty to the public. Statements about the duties or responsibilities of any given organizations, or its employees or officers, refer only to the duties or responsibilities owed by the organizations to each other, or owed by the employees and officers to their respective organizations

Submit comments/corrections to Larry Wooster at:

larry.wooster@dot.ca.gov

- or -

(916) 654-6104

NOTE: The contents of this publication are not copyrighted. They may be reprinted freely.

The Traffic Incident Management Guidelines is available on the California Department of Transportation Website at:

<http://www.dot.ca.gov/hq/traffops/systemops/tim_tmt/

TIM Guidelines Contributors

California Department of Transportation

Antonio Duran
David McPeak
Patricia Sanders
Diana Gomez
Larry Wooster

California Highway Patrol

Lieutenant Dana Sampson
Mary Uhazi

California Tow Truck Association

Terry Warford

CALSTAR

Brad Mills

Federal Highway Administration

Tim Crothers

Marin County Sheriff's Office, Coroner Division

Emily Schum

Metropolitan Transportation Commission

Sarah Burnworth
Radiah Victor

North American Hazardous Materials Management Association, California Chapter

Laura Greer

Sacramento County Sheriff Department

Jon Zwolinsky

Sacramento Metro Fire

Captain Michael Teague

San Mateo County Coroner

Michelle Rippy

Foreword

The Texas Transportation Institute's 2011 *Urban Mobility Report* estimates that in 2010, congestion in the 439 urban areas studied cost urban Americans 4.8 billion hours in delay and 1.9 billion gallons of fuel (210,000 tank trucks) at a cost of $115 billion. The FHWA's 2011 *Focus on Congestion Relief* estimates that approximately 25 percent of this congestion is caused by traffic incidents on the State highways.

Successful Traffic Incident Management (TIM) can save lives, reduce non-recurring congestion and save millions of dollars that would have been lost to travel delays. Nationwide TIM efforts have been estimated to reduce annual delay by 129.5 million hours, for an estimated cost savings of $2.5 billion.

In California, the Department of Transportation and the California Highway Patrol are committed to safeguarding the motoring public and those responding to traffic incidents while reducing congestion and traffic delays from incidents that occur on our State highways.

Safe, quick clearance of incidents depends on strong, coordinated and cooperative multi-agency operations**.** The appropriate rapid response of the Transportation Management Centers (TMC), first responders, and field personnel can help prevent secondary incidents (end-of-queue collisions) and drastically reduce congestion by decreasing incident clearance time, providing detailed, timely traffic information to the public, and by using changeable message signs (CMS) and temporary signs to inform the public of available detours.

In order to support the goal of safe and quick clearance of incidents, it is important to build and maintain relationships between all agencies and personnel involved in the clearance of incidents. This could include local governmental agencies who can assist with new legislation or contribute funds to Intelligent Traffic System (ITS) elements, signs and resources for incident response. In cases where certain types of incidents are prevalent (e.g., fatalities, big rig roll-overs, hazardous waste spills), relationships with associations, unions and elected officials could become critical.

TABLE OF CONTENTS

1	**Introduction**		**01**
	1.1	Incident Command System	**01**
	1.2	Roles and Responsibilities	**02**
2	**Incidents**		**07**
	2.1	Immediate Notification Events	**07**
	2.2	As Soon as Possible Notification	**07**
	2.3	Incident Components	**07**
Fig.	2.1	Incident Components	**08**
3	**California TIM Laws - Plain English**		**09**
	3.1	Lane Closures	**09**
	3.2	Hazardous Material Spills	**09**
	3.3	Clearance of Collisions with Property Damage Only	**10**
	3.4	Code 3 Response and Work zones	**10**
	3.5	Removal of Spilled Loads/Material from the Highway	**10**
4	**Incident Classification**		**11**
	4.1	Major Incident Logging	**11**
	4.2	Secondary Incidents	**12**
5	**Initial Scene Response**		**13**
	5.1	Work Zones and First Responders	**13**
	5.2	Incident Response Priorities	**13**
	5.3	Scene Size-up	**14**
	5.4	Information Needed from the Field	**15**
	5.5	Role of TMC/Dispatch	**17**
6	**Arrival and Vehicle Positioning**		**20**
	6.1	Component Areas of a Scene	20
Fig.	6.1	Component Areas	21
	6.2	Activity Area	22
Fig.	6.2	Emergency Vehicle Fend-off position	23
Fig.	6.3	MUTCD Compliant Activity Area	24
Fig.	6.4	Linear Blocking Position	25
	6.3	Emergency Lighting	25
	6.4	Positive Traffic Control	26
Fig.	6.5	Flagging	27
	6.5	Explosives - Safety Stand-off Distances	28
7	**Damage to State Highways**		**30**
	7.1	Bridges	30
	7.2	Guardrail	30

	7.3	Jersey Wall or K-Rail	30
	7.4	Electrical Lines or Power Poles	**31**
	7.5	Fences	**31**
	7.6	Large Debris	**31**
	7.7	Hazards in the Roadway	**31**
	7.8	Sand Barrels and Attenuators	**31**
	7.9	Damaged or Missing Signs	**31**
8	**Adverse Weather Conditions**		**33**
	8.1	Limited Visibility (Dust/Fog)	33
	8.2	High Winds	34
	8.3	Heavy Rain	34
	8.4	Snow	34
9	**Coroner Considerations**		**35**
	9.1	Coroner Investigation/Response	**35**
	9.2	Criminal vs. Non-criminal Conduct	**35**
	9.3	Loss of Evidence or Property	**36**
	9.4	Disruption of the Body	**36**
10	**Hazardous Materials Considerations**		**37**
	10.1	Transporting Hazardous Waste	37
	10.2	Hazardous Material Spills	37
11	**Towing and Recovery**		**40**
	11.1	Information Needed to Request Towing	**40**
Fig.	11.1	Vehicle Classifications	**40**
12	**Helicopter Considerations**		**43**
	12.1	Landing Zone	**43**
	12.2	Landing the Helicopter	**44**
Fig.	12.1	Position Relative to Helicopter	**44**
	12.3	Assisting the Helicopter Crew	**45**
13	**Caltrans Districts and TMCs**		**47**
14	**Traffic Management Teams**		**49**
	14.1	Dispatch	49
	14.2	Duties	49
	14.3	Reports	50
Appendix A - Laws and Authorities			**51**
Appendix B - Caltrans Equipment			**63**
Glossary			**67**
Acronyms			**70**
California Organizations and Associations			**72**

NOTES:

NOTES:

01 INTRODUCTION

SPECIAL NOTE: Per section 2400 of the California Vehicle Code (CVC), the California Highway Patrol (CHP) has primary jurisdiction over all traffic collisions on all toll highways and State highways constructed as freeways, including transit-related facilities located on or along the rights-of-way of those toll highways or freeways (with the exception of some incorporated areas).

Per sections 92, 124 and 127 of the California Streets and Highways Code, the California Department of Transportation (Caltrans) may do any act necessary, convenient or proper for the maintenance of all highways which are under its jurisdiction, possession and control and may restrict use of, or close any State highway whenever Caltrans considers it necessary, and the CHP shall cooperate with Caltrans in the enforcement of the closing or restriction of use.

1.1 INCIDENT COMMAND SYSTEM

Agencies responding to incidents on State highways will utilize the National Incident Management System (NIMS). The first arriving emergency responder will establish command. Per CVC section 2400, upon arrival, CHP or the senior law enforcement official will assume command of the incident. Agencies will cooperate and work together for the safe and efficient mitigation of the emergency. Law enforcement, DOT, fire and EMS representatives will be expected to make decisions based on their experience and expertise in their respective fields to contribute to the successful conclusion of the incident. Any decisions made will be communicated to other agency representatives to ensure coordination of efforts. The CHP or other senior law enforcement official on scene will make the final determination with respect to any disputes that may arise involving the incident. The senior Caltrans official on scene will make final determination with respect to any disputes that may arise involving the facilities themselves.

1.2 ROLES AND RESPONSIBILTIES

The roles and responsibilities described in this section are intended to illustrate how these agencies and emergency services providers are typically involved in the incident management process. Roles and responsibilities of those involved with incident management activities will vary based on severity of incidents and jurisdictional boundaries.

Incident Commander

CHP uniformed personnel shall assume incident command at highway incidents where they have primary investigative authority (CVC 2400). The highest ranking CHP official at the incident is the on-scene incident commander.

Typical responsibilities include:

(1) Direct the resources to where they will be most effective.

(2) Ensure emergency vehicles operate in accordance with the CVC and Standard Operational Guidelines of the responding agencies.

(3) Correct unsafe behavior of any personnel.

(4) Ensure that the welfare of all parties involved takes precedence over collision investigation duties.

(5) Ensure that the injured receive appropriate care, and that a safe environment for the motoring public, involved parties, and emergency service providers is maintained.

(6) Ensure that jurisdictions affected by hazardous material spills are contacted in a timely manner. Monitor the situation and confirm that a response from affected political subdivisions and/or allied agencies has been received.

The responsibility for incident command may shift if the incident evolves into a widespread multi-jurisdictional emergency incident. However, the CHP incident commander shall maintain incident command duties, responsibilities, and investigative authority at the original site of the incident.

Incident Command System responsibilities must continue until all

emergency operations at the scene have been terminated and order has been restored. Discontinuing emergency management activities and protection of the scene before the emergency and its attendant hazards are eliminated could result in additional injuries and property damage.

Law Enforcement:

The California Highway Patrol has primary jurisdiction over all incidents that occur on State routes with the exception of some large cities (see CVC Section 2400).

Typical responsibilities include:

(1) Serve as Incident Commander.
(2) Secure incident scene.
(3) Protect incident scene.
(4) Perform first responder duties.
(5) Assist responders in accessing the incident scene.
(6) Establish emergency access routes.
(7) Control arrival and departure of incident responders.
(8) Police perimeter of incident scene and impact area.
(9) Conduct crash investigation.
(10) Perform preliminary traffic control.

Coroner:

The Coroner has the duty to determine the circumstances, manner, and cause of all fatalities. (see CA Gov Code Section 27491).

Typical responsibilities include:

(1) Determine the cause of death of a victim when there are fatalities involved in an incident.
(2) Identification of the decedent.
(3) Preserve decedent property.
(4) Notify next of kin.

Fire and Rescue:

Fire and rescue services are provided by local, city, county and state fire departments and emergency management agencies.

Typical responsibilities include:

(1) Protect the incident scene.

(2) Rescue/extricate victims.

(3) Extinguish fires.

(4) Respond to and assess incidents involving hazardous materials release.

(5) Contain or mitigate release of hazardous materials.

(6) Assume role of Incident Commander, if appropriate.

(7) Support unified command as necessary.

Emergency Medical services:

Emergency medical service personnel have primary responsibility for the triage, treatment and transport of incident victims.

Typical responsibilities include**:**

(1) Provide medical treatment to those injured at the incident scene.

(2) Determine destination and transportation requirements for injured victims.

(3) Coordinates evacuation with fire, police, or airlift.

(4) Transport victims for additional medical treatment.

(5) Support unified command as necessary.

Department of Transportation:

Caltrans is responsible for the Transportation Management Centers (TMCs), District Maintenance forces and Traffic Management Teams (TMTs).

Typical responsibilities include:

(1) Monitor traffic operations (TMC).

(2) Perform incident detection and verification (TMC, Free-

way Service Patrol (FSP), TMT, Maintenance).

(3) Protect incident scene (TMT, Maintenance).

(4) Perform first responder duties (Maintenance).

(5) Clear minor incidents (Maintenance/FSP).

(6) Implement traffic control strategies and provides supporting resources (TMT, Maintenance).

(7) Disseminate traveler information (TMC/TMT).

(8) Assess and direct incident clearance activities (Maintenance).

(9) Mitigate small vehicle fluid spills (Maintenance).

(10) Develop alternate routes (TMC, TMT, Maintenance).

(11) Assess and perform emergency roadwork and infrastructure repair (Maintenance).

(12) Assume role of Incident Commander, if appropriate (Maintenance).

(13) Support unified command as necessary (TMT, Maintenance).

Towing and Recovery:

Towing and recovery services are responsible for the safe and efficient removal of wrecked or disabled vehicles and debris from the incident scene. Chapter 11 of these guidelines includes a vehicle identification guide to assist with providing the information needed to correctly dispatch towing and recovery units.

Typical responsibilities include:

(1) Recover vehicles and cargos.

(2) Remove disabled or wrecked vehicles and associated debris from the roadway (CVC 27700).

(3) Mitigate non-hazardous material (cargo) spills.

(4) Mitigate small vehicle fluid spills.

(5) Support unified command as necessary.

Hazardous Waste Contractors:

CVC section 2454 states that CHP has incident command at the site of a highway hazardous substance spill. CVC 23113(a) indicates that the person who causes a material to be spilled on a highway shall immediately remove the material or have it removed. If the spiller cannot remove the material, CHP will notify the spiller and authorize Caltrans to remove the material at the spiller's expense. If the spill is beyond Caltrans capabilities to clean-up, Caltrans will request a hazardous waste contractor and will provide a liaison, trained at the First Responder Operations level, to work with the contractor.

Typical responsibilities include:

(1) Contain and remove hazardous waste.

(2) Mitigate on-going release of material into the environment.

(3) Coordinate with CHP to arrange for an escort to move collected hazardous waste to a location off of the traveled way where transport paperwork can then be signed authorizing the contractor to transport the materials.

02 INCIDENTS

2.1 IMMEDIATE NOTIFICATION EVENTS

Upon arriving on scene, TIM responders shall immediately notify Caltrans via the District's Emergency Operations Center/Transportation Management Center of the following:

(1) Any fatality or major injury collision on a State Highway.

(2) Any State highway or freeway closure.

(3) Any lane closure.

(4) Any incident involving hazardous materials within the State right-of-way.

(5) Any incident that is hazardous to the travelling public.

2.2 AS SOON AS POSSIBLE NOTIFICATION

Caltrans shall be notified as soon as possible, or if after hours, the next day via the District's Emergency Operations Center/ Transportation Management Center of any damage to the roadway, State property or appurtenances and any other incidents not identified as an immediate hazard.

2.3 INCIDENT COMPONENTS

When an incident occurs within the State's right-of-way, there are six distinct components that for the phases of the incident:

(1) Detection.

(2) Verification.

(3) Dispatch.

(4) Response.

(5) Clearance.

(6) Normal Conditions.

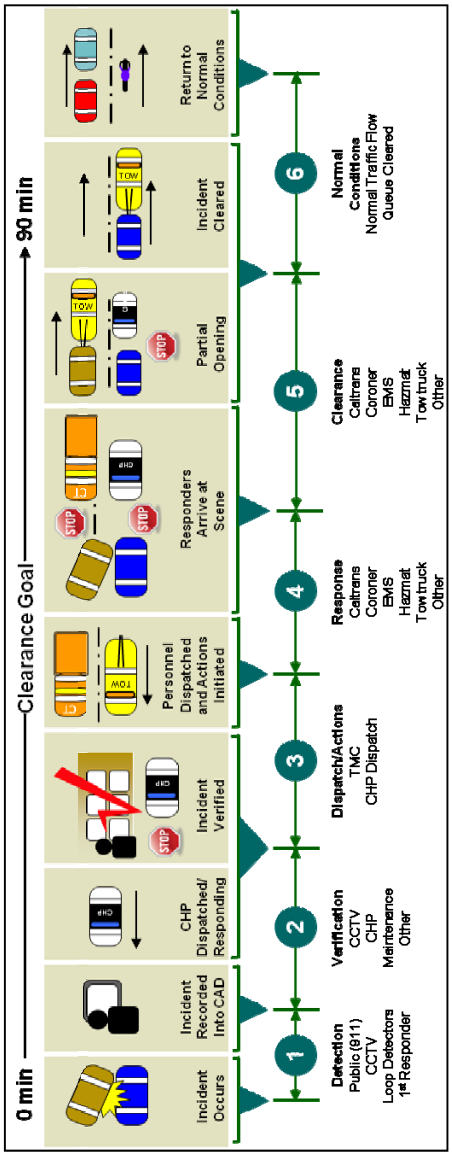

Figure 2.1—INCIDENT COMPONENTS

03 CALIFORNIA TIM LAWS - PLAIN ENGLISH

Most of the California State laws and codes are provided in their entirety in Appendix A of these guidelines. This section is provided in order to present plain English interpretations of the laws and codes.

3.1 LANE CLOSURES

Caltrans can restrict access to any or all of the lanes on a State highway to protect the public or the highway itself. CHP will assist by directing traffic as needed.

Sources:

California Streets and Highway Code Sections 90, 92, 124, 125 and 127.

CVC Section 2410.

CHP can direct traffic and restrict access to any or all of the lanes on a State highway as necessary for fire, emergencies or for the public's safety.

Sources:

California Streets and Highway Code Section 127.

CVC Section 2410.

3.2 HAZARDOUS MATERIAL SPILLS

CHP has control of the overall scene where a hazardous waste has been spilled on the highway at all locations that they have primary investigative authority. CHP does not have directive authority over how hazardous waste specialized functions are provided by the various other responding agencies.

Source:

CVC Section 2454.

3.3 CLEARANCE OF COLLISIONS WITH PROPERTY DAMAGE ONLY

Drivers of any vehicle involved in a collision that results only in property damage shall immediately move the vehicle to the nearest location that does not impede traffic or cause safety issues to other motorists. Failure to do so is a misdemeanor punishable by imprisonment of up to six months in the county jail, a fine not to exceed $1000, or both.

Source:

CVC Section 20002.

3.4 CODE 3 RESPONSE AND WORKZONES

Code-3 drivers must slow down and obey the commands of any representative of Caltrans or the local authority that has jurisdiction that is directing traffic in a work zone. This includes flaggers, construction, maintenance and contract employers.

Source:

CVC Sections 21367, 21806 and 21807.

3.5 REMOVAL OF SPILLED LOADS/MATERIAL FROM THE HIGHWAY

The owner shall immediately remove or have someone remove the spilled load or material.

Caltrans may remove the spilled load or material and collect the actual cost of the removal operation from the owner if the owner is unable to immediately remove the spilled load or material.

If the owner and/or Caltrans cannot remove the spilled load in a timely manner, CHP can designate a responsible party to remove the spilled load or material.

Liability for damage - Caltrans, CHP or anyone designated by CHP to remove the spilled load cannot, absent a showing of gross negligence or willful conduct, be held liable for damage to the load/material.

Source:

CVC Section 23113.

04 INCIDENT CLASSIFICATION

The January 2012 edition of the California Manual on Uniform Traffic Control Devices (MUTCD) and the 2009 U.S. Department of Transportation MUTCD divide traffic incidents into three general classifications, based on duration:

(1) **Major traffic Incident**

- Expected duration of more than two hours
- Typically involve closing all or part of a roadway facility
- Typically involve hazardous materials, fatal traffic crashes involving numerous vehicles and other natural or man made disasters

(2) **Intermediate traffic incident**

- Expected duration of 30 minutes to two hours
- Full road closures may be needed for short periods during incident clearance

(3) **Minor traffic incident**

- Expected duration of less than 30 minutes
- Typically result in lane closures that last less than 30 minutes
- Typically involve disabled vehicles and minor crashes

4.1 MAJOR INCIDENT LOGGING

Caltrans' Major Incident Data Base (MIDB) and Transportation Management Center Activity Logging (TMCAL) and CHP's Computer Aided Dispatch (CAD) systems are the data bases that Caltrans utilizes to track incidents in the State of California.

NOTE: The current agreement between Caltrans and the CHP is that incidents that are tracked and reported in the MIDB are all unplanned, non-recurring events that reduce highway capacity and require both agencies to respond to the incident scene. TMCAL will eventually track all incidents that Caltrans takes action on.

4.2 SECONDARY INCIDENTS

FHWA's Traffic Incident Management Handbook defines secondary incidents as unplanned incidents for which a response or intervention is taken, where a collision occurs either within the incident scene or within the queue (which could include the opposite direction) resulting from the original incident.

05 INITIAL SCENE RESPONSE

5.1 WORK ZONES AND FIRST RESPONDERS

CVC 21807 states that the provisions of 21806 do not relieve the driver of an authorized emergency vehicle from the duty to drive with due regard to safety for all persons and property.

CVC 21806 authorizes the right of way for emergency vehicles to respond to incidents.

CVC 21367 authorizes representatives of Caltrans to restrict use of and regulate movement of traffic through or around work areas.

In order to transit a work zone safely, vehicles operating in a "Code-3" status must obey the direction of flaggers in work zones. Work zone flaggers will provide a clear lane for Code-3 vehicles as soon as possible once they are aware of the need. First responders can expedite this process by coordinating with the TMC in their region (see Section 12) prior to reaching the work zone. Once a path has been cleared and permission has been given to proceed through the work zone, emergency vehicles should obey all directions of the personnel in the work zone and proceed at a safe speed to avoid endangering themselves or the workers in the work zone.

5.2 INCIDENT REPONSE PRIORITIES

Priority 1: Life Safety

Initial efforts are to preserve lives, including those of responders, incident victims and passing motorists. Safety is the highest priority throughout the incident.

Priority 2: Incident Stabilization

Using best practices, stabilize the incident scene to prevent fire, eliminate ignition sources, contain hazardous materials and stabilize vehicles involved in the incident.

(1) Prevention of Secondary Incidents – Responders should use available traffic control devices and, if possible, position apparatus to divert traffic around the crash scene. Special attention should be paid to the end of the traffic queue, using permanent and portable Changeable Message Signs (CMS) to warn motorists of slow or stopped traffic as they approach the end of the queue.

(2) Protection of Evidence – All incident sites are potential crime scenes and must be treated accordingly. Responders must make every effort to minimize the impact of their presence on the crash scene.

(3) Safe, Quick Clearance – It should be the goal of all responders to clear the scene as soon as practical and to restore traffic flow to limit the diversion of traffic to less desirable and/or more hazardous routes.

Priority 3: Protection of Property and the Environment

Responders should attempt to protect and preserve the highway infrastructure and limit damage to vehicles involved in incidents to what is necessary to stabilize and remove victims trapped in the vehicles. Property salvage operations should be conducted as soon as safely possible. For hazardous materials and/or potential hazardous materials scenes, responders with the proper personal protective equipment and training should strive to contain the spilled product while minimizing exposure.

5.3 SCENE SIZE-UP

As soon as practical upon arriving at the scene of a traffic incident the first responder should provide the emergency operations/dispatch center with the information outlined below. As much information as possible should be provided before initially exiting the response vehicle:

(1) Location of incident:

(a) County.

(b) Route.

(c) Post mile/nearest intersection.

(d) Direction (NB, SB, EB, WB).

(2) Incident type (e.g., fire, earthquake, flood, radiological emergency, hazardous material spill).

(3) Type of hazardous materials involved (if any).

(4) Impacts to traffic (number of lanes blocked, etc).

(5) Vehicle information (number and type of vehicles involved, level of damage).

(6) Number of persons potentially affected by the incident.

(7) Anticipated threat/hazards to emergency responders.

(8) Lead agency.

(9) Resources needed:

(a) Personnel.

(b) Vehicles.

(c) Equipment/Supplies.

(9) Location of the Incident Command Post (ICP) or staging area (if established).

(10) Ingress/egress routes.

5.4 INFORMATION NEEDED FROM THE FIELD

Experience shows that each of the agencies that may be called out to an incident is best qualified to identify what resources should be dispatched to an incident. The best way to ensure there are fewer delays in getting the right personnel and equipment to the incident is to provide information on the incident itself, relay that to dispatch and have them relay it to the other agencies.

A picture is worth a thousand words – Using smart phone, tablet or other device, take two to three pictures of the scene and transmit them to dispatch so they can transmit them to the other first responders. Focus on critical information requirements:

(1) Overall scene photo

(2) Placards for any possible hazardous waste

(3) Gross Vehicle Weight Rating (GVWR) placard on the vehicle's driver's side doorframe

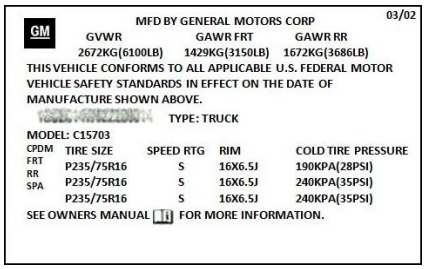

03/02

GM

MFD BY GENERAL MOTORS CORP

GVWR	GAWR FRT	GAWR RR
2672KG(6100LB)	1429KG(3150LB)	1672KG(3686LB)

THIS VEHICLE CONFORMS TO ALL APPLICABLE U.S. FEDERAL MOTOR VEHICLE SAFETY STANDARDS IN EFFECT ON THE DATE OF MANUFACTURE SHOWN ABOVE.

TYPE: TRUCK

MODEL: C15703

CPDM	TIRE SIZE	SPEED RTG	RIM	COLD TIRE PRESSURE
FRT	P235/75R16	S	16X6.5J	190KPA(28PSI)
RR	P235/75R16	S	16X6.5J	240KPA(35PSI)
SPA	P235/75R16	S	16X6.5J	240KPA(35PSI)

SEE OWNERS MANUAL FOR MORE INFORMATION.

(4) Photo of any spilled load with a description of what was spilled

5.5 ROLE OF TMC/DISPATCH

TMC staff should assist with situational awareness of responders and decision makers through the following steps (some of these can be done concurrently):

(1) Determine Scope of Incident using CAD, CHP/CT personnel on scene and/or Closed Circuit Television (CCTV) cameras.

(2) Log Incident into TMCAL.

(3) As needed, activate fixed CMS, Highway Advisory Radios (HARS). Coordinate with TMT/Maintenance if PCMS are required.

(4) If a semi tractor trailer or big rig is involved, inquire of CHP if there is a fuel, hazardous material or unknown (unidentified) material or fluid leak / spill.

(5) If Hazardous Waste is present (leaking fuels, fluids, spilled hazardous waste loads), contact District Hazmat Team as soon as possible.

(6) Dispatch Maintenance personnel.

(7) Dispatch TMT if queues are anticipated and/or detours are anticipated.

(8) If the incident involved Caltrans or contractor personnel, contact appropriate District and Headquarters executives.

(9) If incident was a work zone incident, contact appropriate Maintenance, Construction or Permits Deputy Director.

(10) If incident has fatalities or lane closures, contact Maintenance Supervisor/Superintendant.

(11) If there is damage to any Caltrans Structure of Facility, contact Structures Construction and/or Maintenance.

(12) Coordinate with neighboring Districts for CMS, HARs support if incident will impact travelers in those Districts.

(13) Notifications - As appropriate (refer to the Highway Condition Reporting Requirements) notify:

(a) If there are sustained impacts to the travelling public – Ensure the California Highway Information Network (CHIN) is updated.

(b) If the incident requires calling in additional TMC personnel – Contact TMC Manager.

(c) If the incident will most likely have high media interest or impact to Caltrans – Contact the Duty Officer, appropriate District Deputies, District/HQ Executive staff and the Public Information Officer.

(d) If the incident requires a large Maintenance response – Contact the area Maintenance Supervisor.

(e) Construction Resident Engineer.

(f) Public Information Officer.

(g) 511 and other regional traffic information providers.

(14) If there will be impact to City/County roads, coordinate with the HQ Communications Center and the local agencies.

(15) If there will be impact on other modal operations, contact the affected operation centers.

(16) Update CMS, HARs and the CHIN as the incident progresses and new information is obtained.

(17) Upon traffic conditions returning to normal, close out the incident as applicable:

(a) Deactivate incident related messages on CMS/ HARs.

(b) Notify CHIN of return to normal traffic conditions.

(c) Notify neighboring Districts of return to normal traffic conditions.

(d) Notify executive staff.

(e) Notify city, county, modal operations centers.

(f) Notify 511 and other regional traffic information providers.

06 ARRIVAL & VEHICLE POSITION

6.1 COMPONENT AREAS OF A SCENE

ADVANCE WARNING AREA

Alerts the motorist that there is a traffic incident or slow/ stopped traffic ahead which will require some action on his/her part.

APPROACH AREA

Identifies the nature of the equipment or vehicle that the motorist is about to encounter, allowing them to analyze the situation.

TRANSITION AREA

Provides an indication as to the expected action to be taken by the motorist. This helps them decide on a course of action to execute safe driving techniques prior to entering the Activity Area.

ACTIVITY AREA

(1) Fend Off Position—Position of the emergency vehicle.

(2) Buffer Zone - Scene protection area between the first emergency vehicle and the incident site.

(3) Incident Site—Restricted to authorized personnel only.

(4) Staging Area—For emergency Vehicles not immediately required to perform a function or provide shielding at the incident scene. This area should be downstream/upstream of the incident site and the location should not create a traffic hazard or obstruction.

(5) Traffic Space—Where traffic is allowed to pass by the Activity Area.

TERMINATION AREA

The area where traffic returns to it's normal path. The Termination Area extends from the downstream side of the Staging Area to the point where normal traffic is able to resume. Where motorist safety is compromised such as access to off/on ramps in this area, traffic control may be required.

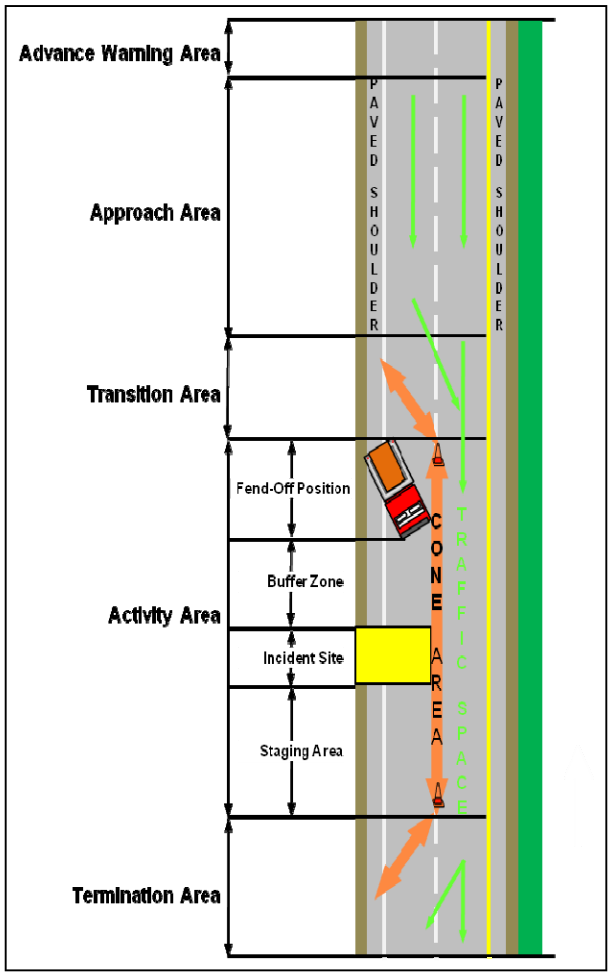

Figure 6.1—COMPONENT AREAS

6.2 ACTIVITY AREA

FEND-OFF POSITION - Positioning of emergency vehicles at an incident that provides added protection to the scene from traffic and allows approaching motorists the best visibility of the emergency vehicle, providing them with recognition in regards to the incident. Pull as far to the right or left as possible, then turn sharply back, to position your vehicle at 20 to 30 degrees to the centerline of the roadway**.** This position will also aid in deflecting any high speed impact from an errant vehicle that would otherwise crash into the scene.

Response vehicles should only be parked on the opposite side of a divided highway from the scene of an incident when the INCIDENT COMMANDER determines the benefits outweigh the risks.

Vehicles not protecting the scene or responders should be staged in a safe area. Their location should not create a traffic hazard or obstruction, or impede other emergency vehicles.

The Fire Department often takes an extra lane to protect the activity area. After a queue has developed, the fire apparatus should be moved to open the extra lane in order to reduce congestion and the chances of secondary incidents.

BUFFER ZONE - Recommended between the incident scene and the emergency vehicles. The suggested distance is 21 feet for every ten miles per hour of posted speed:

(1) If an emergency vehicle is hit from behind, it may not be pushed into the original incident.

(2) Apparatus remains functional for firefighting operations.

(3) Scene preservation (response personnel not driving inside the collision scene destroying evidence).

Cones can be used to close off the *Buffer Zone* to vehicular traffic by placing them along the centerline used to separate the highway.

<u>LATERAL BUFFER ZONE</u> - While considering the *Fend-Off* position and the *Buffer Zone,* attempt to position the front bumper of the emergency vehicle at least two feet (0.6 m) from the lane line. This *Lateral Buffer* is used to reduce encroachment into the designated traffic lanes. Traffic cones should also be placed on the skip line beside the emergency vehicle to allow personnel safer access around the corner of the vehicle.

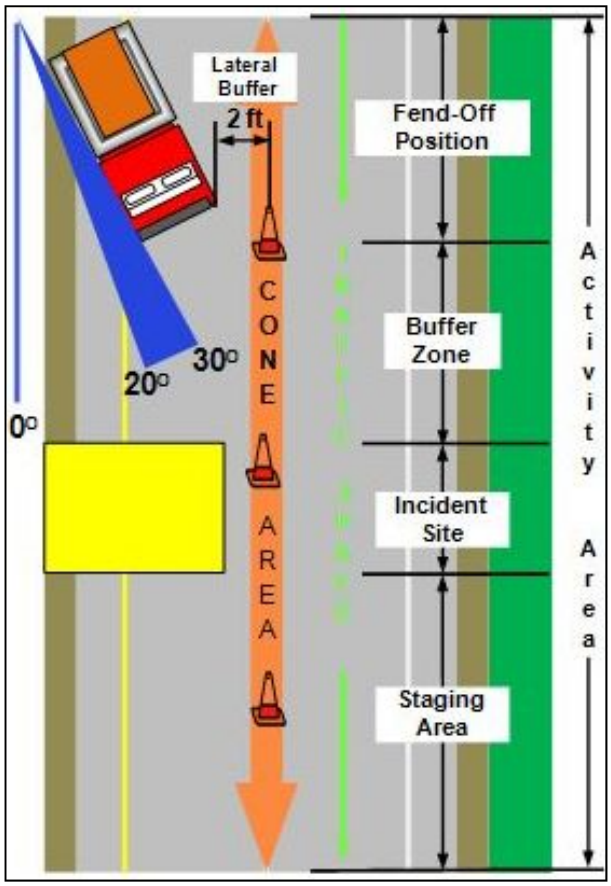

Figure 6.2—EMERGENCY VEHICLE FEND-OFF POSITION

Figure 6.3 shows an *MUTCD*-compliant activity area that incorporates the elements of safe positioning. As shown, the larger fire apparatus in the left foreground is parked at the 30 degree angle with wheels turned out. This placement creates the appropriate buffer and space for the incident work area. The vehicle's left front end is located approximately two feet from the cone, creating the lateral buffer area. Cones are placed to mark the incident and a law enforcement vehicle (wheels turned right) is placed between the buffer vehicle and the incident to help with traffic control. The EMS vehicle is parked mid-way and angled to protect the patient loading area.

Figure 6.3—MUTCD COMPLIANT ACTIVITY AREA

Figure 6.4 shows the linear blocking position recommended in the International Associations of Chiefs of Police's 2004 *Law Enforcement Stops & Safety Subcommittee Staff Study.* The linear blocking position is used when a first responder does not need to be concerned with victim extrication or a passenger exiting the vehicle as in the case of an abandoned vehicle or a routine traffic stop. The first responder is positioned to block the scene from the approach of an errant vehicle, with 15 feet of space between the vehicles, a 50% offset between the vehicles and the responder vehicles wheels turned to a 25 degree angle.

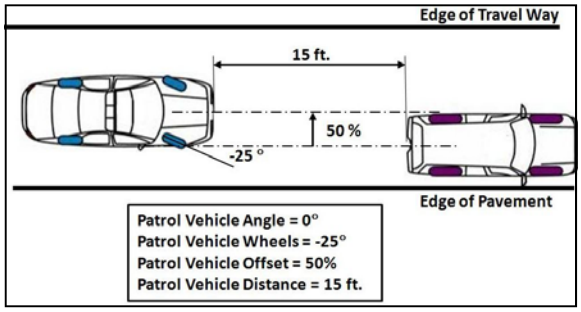

Figure 6.4—LINEAR BLOCKING POSITION

6.3 EMERGENCY LIGHTING

The MUTCD, chapter 6I.05 stresses that the use of warning lights is essential for warning the travelling public, especially at the initial stages of an incident. It further states that emergency lighting can be confusing to drivers, especially at night.

Drivers approaching from the opposite direction can be distracted, slowing down and creating a queue on the non-incident side of the roadway that can lead to secondary incidents.

While some lighting is necessary to warn approaching motorists, too much or certain types of lighting can be distracting.

(1) EMS personnel should consider turning off forward facing emergency lights to reduce distraction to drivers travelling in the other direction (non-incident side of roadway).

(2) At night time, emergency lighting should be reduced to levels needed to warn the motorist. Headlights and fog lights should be turned off to avoid the “moth affect” where a motorist may steer in the direction of the lights.

(3) In all cases, emergency lighting should not be substituted for safe traffic control. Permanent and portable CMS should be used to warn the traffic ahead of the incident, and as soon as possible warning signs and

cones should be placed according to standard for lane closures.

6.4 POSITIVE TRAFFIC CONTROL

NOTE: Except for unusual circumstances or emergencies, flaggers should not be used on freeways. Permanent or portable CMS should be used in advance of the incident whenever available. Flagging should be done as a last resort and the red flag should only be used until such time as a stop/slow paddle is available.

Providing flagging at an incident scene reduces rubbernecking and helps keep traffic moving smoothly past the scene.

(1) Utilize qualified flaggers if possible, but any response personnel can be flaggers if necessary.

- Do not use bystanders, good Samaritans or other untrained personnel for traffic control duties.

(2) Give commands or directions to traffic in a clear, courteous but firm tone.

(3) Accompany verbal commands to “stop,” “slow down,” and “proceed” with appropriate hand movements or the use of a “Stop/Slow” paddle or flag.

(4) Note that whistles can also be an effective tool.

(5) Flaggers should be positioned at a safe location near the beginning of the taper when providing positive traffic control in the transition taper area.

(6) Flaggers should be positioned at a safe location adjacent to the wrecked vehicles when providing positive traffic control in the activity area.

(7) Flaggers should make eye contact with the drivers of approaching vehicles to encourage them to pay attention to their driving and not the incident. This will increase the flow of traffic past the incident scene, reducing delay.

(8) Flaggers should avoid providing individualized directions to motorists as this can create more congestion by slowing traffic.

PREFERRED METHOD (STOP/SLOW PADDLE) | **EMERGENCY SITUATIONS (RED FLAG)**

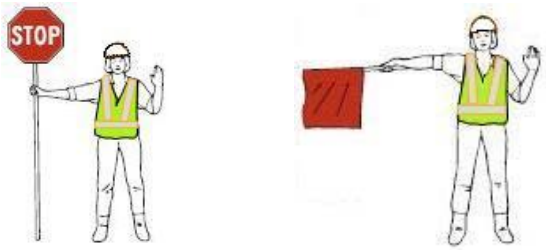

TO STOP TRAFFIC

TO LET TRAFFIC PROCEED

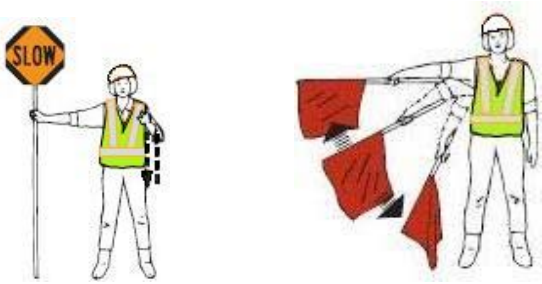

TO ALERT AND SLOW TRAFFIC

Figure 6.5—FLAGGING

6.5 EXPLOSIVES - SAFETY STANDOFF DISTANCES

The following are United States Army, National Ground Intelligence Center guidelines for standoff distances for possible explosives:

	Threat Description		Explosives Mass[1] (TNT equivalent)	Building Evacuation Distance[2]	Outdoor Evacuation Distance[3]
High Explosives (TNT Equivalent)		Pipe Bomb	5 lbs 2.3 kg	70 ft 21 m	850 ft 259 m
		Suicide Belt	10 lbs 4.5 kg	90 ft 27 m	1,080 ft 330 m
		Suicide Vest	20 lbs 9 kg	110 ft 34 m	1,360 ft 415 m
		Briefcase/ Suitcase Bomb	50 lbs 23 kg	150 ft 46 m	1,850 ft 564 m
		Compact Sedan	500 lbs 227 kg	320 ft 98 m	1,500 ft 457 m
		Sedan	1,000 lbs 454 kg	400 ft 122 m	1,750 ft 534 m
		Passenger/ Cargo Van	4,000 lbs 1,814 kg	640 ft 195 m	2,750 ft 838 m
		Small Moving Van/Delivery Truck	10,000 lbs 4,536 kg	860 ft 263 m	3,750 ft 1,143 m
		Moving Van/Water Truck	30,000 lbs 13,608 kg	1,240 ft 375 m	6,500 ft 1,982 m
		Semitrailer	60,000 lbs 27,216 kg	1,570 ft 475 m	7,000 ft 2,134 m

---

[1]Based on the maximum amount of material that could reasonably fit into a container or vehicle. Variations possible.

[2]Governed by the ability of an unreinforced building to withstand severe damage or collapse.

[3]Governed by the greater of fragment throw distance or glass breakage/falling glass hazard distance. These distances can be reduced for personnel wearing ballistic protection. Note that the pipe bomb, suicide belt/vest, and briefcase/suitcase bomb are assumed to have a fragmentation characteristic that requires greater standoff distances than an equal amount of explosives in a vehicle.

	Threat Description		LPG Mass/Volume[1]	Fireball Diameter[1]	Safe Distance[2]
Liquefied Petroleum Gas (LPG - Butane or Propane)		Small LPG Tank	20 lbs 5 gal 9 kg 19 l	40 ft 12 m	160 ft 48 m
		Large LPG Tank	100 lbs 25 gal 45 kg 95 l	69 ft 21 m	276 ft 84 m
		Commercial/Residential LPG Tank	2,000 lbs 500 gal 907 kg 1,893 l	184 ft 56 m	736 ft 224 m
		Small LPG Truck	8,000 lbs 2,000 gal 3,630 kg 7,570 l	292 ft 89 m	1,168 ft 356 m
		Semitanker LPG	40,000 lbs 10,000 gal 18,144 kg 37,850 l	499 ft 152 m	1,996 ft 608 m

---

[4]Assuming efficient mixing of the flammable gas with ambient air.

[5]Determined by U.S. firefighting practices wherein safe distances are approximately four times the flame height. Note that an LPG tank filled with high explosives would require a significantly greater standoff distance than if it were filled with LPG.

07 DAMAGE TO STATE HIGHWAYS

Caltrans should be notified IMMEDIATELY for the following:

7.1 BRIDGES

Abutments, columns, decks, railings, etc.

(1) Concrete.

(a) Any significant fire damage.

(b) Any hit that creates or is suspected of chipping or cracking the concrete.

(2) Metal (Identify type of rail: Guard rail or bridge rail).

(a) Any missing rail.

(b) Any significant fire damage.

(c) Any protruding or bent rail that could be a hazard to the public.

7.2 GUARDRAIL

Any damage to the rail or posts.

7.3 JERSEY WALL OR K-RAIL

(1) Jersey wall - Any permanent concrete wall used as a traffic divider.

(a) Any significant cracking or chipping.

(2) K-rail - Any temporary or portable concrete wall used as a traffic divider.

(a) Any significant cracking or chipping.

(b) When the rail has been moved enough to have an impact on traffic.

7.4 ELECTRICAL LINES OR POWER POLES

All electrical and traffic signal problems should be reported. Unknown electrical hazards may be present and must be made safe by qualified electrical personnel to assure the safety of the public.

7.5 FENCES

(1) Barbed wire or wire mesh.

(a) Anytime there is live stock in the area.

(b) Any time the posts are bent towards traffic or create other hazards.

(2) Chain link.

(a) Anytime there is live stock in the area.

(b) Any school area.

(c) Any residential or heavy pedestrian area.

(d) Any time the posts are bent towards traffic or create other hazards.

(e) Any time it will compromise the security of an adjacent business.

7.6 LARGE DEBRIS

Any time that the debris could have either a physical or visual impact on traffic. This could be either on the travel way or on the improved or non-improved shoulder. This includes dead animals.

7.7 HAZARDS IN THE ROADWAY

This would be the same as Large Debris but includes things like large potholes, slippery substances, any fuel, oil or chemical spill, etc.

7.8 SAND BARRELS AND ATTENUATORS

Any sand barrel or other energy attenuator hits.

7.9 DAMAGED OR MISSING SIGNS

Regulatory signs include signs regulating the movement, ac-

cess, speed, stopping, or parking of vehicles. Regulatory signs are generally black and white or red and white.

The following signs should be immediately replaced if missing or damaged:

(1) “STOP”

(2) “YIELD”

(3) “WRONG WAY”

(4) “DO NOT ENTER”

(5) All other regulatory signs that could adversely affect the travelling public if not replaced.

Due to local traffic conditions other highway signs, which are critical to traffic safety, may need to be replaced as soon as possible. CHP Officers reporting damaged highway signs should describe the sign and location in as much detail as possible. The following information will help TMC/Dispatch personnel evaluate and respond to the situation.

(1) State Route Name or Number and nearest cross road.

(2) Mile Post Marker if known.

(3) Type of sign by name (“STOP”, “ONE WAY” , etc.) or by description, “a right curve arrow, black on yellow”.

(4) Type and number of posts supporting the sign, (i.e. “a STOP sign is supported by one 4X4 post”).

(5) Brief description of damage to the sign. (i.e. “the sign is okay, but the post is broken”).

(6) If the sign is “black on white” or “red on white” regulatory sign, are there other signs or pavement markings to direct traffic until the damaged sign can be replaced.

Any sign that is a hazard to the traveling public or pedestrians, or any regulatory sign that is damaged, knocked down or in the CHP Officer’s opinion, in need of attention, should be reported to the TMC as soon as possible. The TMC will notify the appropriate maintenance personnel and they will determine its priority to be replaced. CALTRANS will inform the appropriate CHP communications center that action will be taken, including estimated time of arrival, when possible.

08 ADVERSE WEATHER CONDITIONS

The CHP should notify the TMC immediately upon identification of adverse weather conditions as described below. When the CHP requests CMS usage, Caltrans will decide on the appropriate CMS message. If a conflict occurs, the Caltrans Field Supervisor will meet on site with CHP to resolve the issue.

When requesting CMS activation for adverse weather conditions, the CHP officer should give specific locations effected by the adverse weather conditions (i.e. "Visibility is less than 500 feet on SR99 between Madera/Merced county line and SR145" or "please turn on the fog signs in Tulare County north of SR198").

The CHP officer who requests CMS for adverse weather conditions is responsible for informing the TMC when the CMS can be turned off. If the adverse weather requiring the CMS continues past the end of the requesting officer's shift, the oncoming shift and the communications center should be notified of the need to monitor conditions and inform the TMC when the CMS can be blanked.

If the requesting officer is out of position due to an emergency and cannot monitor the weather in the area covered by the activated CMS, the officer should inform the TMC through the appropriate communications center. The TMC will attempt to verify weather conditions through alternate sources.

Guidelines for the CMS messages used for adverse weather conditions are as follows:

8.1 LIMITED VISIBILITY

Fog and dust: Established criteria for "FOG" or "DUST" messages apply. Appropriate CMS Fog messages are activated when the CHP or other reliable sources report visibility of less than 500 ft., or when "Pacing", is required by the CHP due to conditions of poor visibility.

8.2 HIGH WINDS

Wind: CMS will be activated at the request of the CHP patrol units or other reliable sources. Sustained wind velocities of less than 20 MPH generally would NOT require CMS activation unless the CHP officer believes that the traffic safety requires a cautionary sign.

8.3 HEAVY RAIN

Heavy rain: If the CHP officer believes that heavy rain has reduced visibility or caused flooding and the use of a CMS would help prevent collisions the TMC will activate the CMS with the approved message. Flooding can vary depending on the area but is generally considered to mean standing or flowing water on the roadway, which presents a significant hazard to motorists.

8.4 SNOW

Snow: If the CHP officer believes that snow will be falling and temperatures at that location will result in the snow sticking to the roadway, the officer should immediately advise the TMC. The following conditions should be communicated to the TMC so that the travelling public can be notified:

(1) Snow is imminent and the temperature is cold enough that it is anticipated snow will stick to the roadway (no traffic control - advisory to public of possible delays).

(2) Snow is falling and may or not be sticking to the roadway (no traffic control - advisory to public of possible delays).

(3) Snow is falling and sticking to the highway. CHP is pacing or escorting convoys (advisory to public of delays ahead).

(4) Snow has created unsafe conditions. CHP has closed freeway (advisory to public of delays and detours if available).

09 CORONER CONSIDERATIONS

If the coroner's response is going to be delayed, there are certain steps that need to be taken before the vehicle/victim can be re-located off the travelled way. In some cases, it may not be possible to re-locate the vehicle/victim. In each case, the local coroner should be contacted prior to moving any possible evidence.

CHP and the local Coroner's Office should both be consulted prior to any movement or clean-up conducted after a traffic fatality.

9.1 CORONER INVESTIGATION / RESPONSE

(1) The Coroner is responsible for determining if a victim is deceased and the cause and manner of death of the victim. They are also responsible for positive identification of the deceased, preserving property and notifying next of kin. Moving a wreck and/or the deceased can greatly inhibit their ability to conduct an independent investigation into the traffic fatality.

(2) CHP should notify the local Coroner's Office of any traffic fatality as soon as possible so there will not be further delay in response by a Coroner Investigator.

9.2 CRIMINAL VS. NON-CRIMINAL CONDUCT

(1) If the fatality was or could have been caused by a criminal act, such as driving under the influence, road rage or shooting, no items should be moved from the roadway without express authorization from CHP <u>and</u> the local Coroner's office.

(2) CHP can call the local Coroner's office to brief them on the scene and request authorization to move a body and/or vehicle prior to the Coroner's arrival.

(3) If authorization to move the body and/or vehicle is granted, the Coroner can provide specific instructions

on how to document the scene prior to disturbing it. It is important to thoroughly photograph the scene and mark the original position of the wreckage and/or body (pedestrian or ejected from vehicle) prior to moving anything.

9.3 LOSS OF EVIDENCE OR PROPERTY

(1) Vehicles should never be moved further than the nearest/safest shoulder or off ramp (minimal distance at a slow speed) in order to ensure preservation of evidence.

(2) Any items that break loose from the vehicle should be documented, collected and preserved for the Coroner. The smallest item may assist in the identification of the decedent or their next of kin. It may also assist in determining cause and/or manner of death.

(3) If there is a belief that any evidence or property will be lost, nothing should be moved.

(4) If the environment (road conditions, weather, onlookers) are causing possible destruction or loss of evidence, an effort should be made to document and preserve the evidence. CHP can coordinate this effort when the Coroner is not on scene.

9.4 DISRUPTION OF THE BODY

(1) While law enforcement may cover the body to obscure it from public view it is preferred that privacy screens be used for that function, and unless life-saving measures require extraction, it is extremely important for the Coroner to see the body and vehicle as they came to rest.

(2) If a vehicle is moved prior to the arrival of the Coroner, the decedent should be left in place within the vehicle, undisturbed.

(3) If movement of the vehicle disrupts the position of the body, this should be documented and the information should be presented to the Coroner.

10 HAZARDOUS MATERIALS CONSIDERATIONS

10.1 TRANSPORTING HAZARDOUS WASTE

Unless specifically exempted, only a person that holds a valid registration issued by the Department of Toxic Substances Control (DTSC) can transport hazardous wastes. Custody of those wastes can only be transferred to and transported by another transporter that holds a valid DTSC registration. The DTSC registration is not transferable to any other person and is valid for one year only.

The CHP issues permits for transportation of hazardous waste materials on State highways.

10.2 HAZARDOUS MATERIAL SPILLS

As long as it is prudent and safe to do so, first responders should utilize materials on hand to contain spills and prevent spread of hazardous materials.

When a hazardous material spill comes to the attention of the CHP or Caltrans, the Department first learning of the incident should immediately notify the other of:

(1) spill location

(2) type of material (if known)

(3) approximate quantities of material spilled

If the CHP is unable to contact Caltrans: If the CHP dispatcher is unable to contact Caltrans (three or more names have been called from the approved Caltrans call-out list with negative contact), the CHP incident commander will call the nearest cleanup contractor from Caltrans' approved list directly to handle the spill and will then notify Caltrans of the name of the contractor used and any pertinent data gathered in the field. Contractors who are not on the approved list shall not be called unless an extreme situation exists (i.e., life-

threatening, serious injury, significant environmental or property damage), and pre-approved contractors are not available.

Once a hazardous material spill is identified, the CHP and Caltrans have the following responsibilities:

CHP:

(1) Request any mutual assistance that may be needed.

(2) Make any legally-required notifications related to hazardous materials spills.

(3) Include Caltrans in command post operations and keep Caltrans advised of any new information.

(4) Attempt to identify the type of hazardous material by shipping documents, placards, or other means.

Caltrans:

(1) Provide any required long-term traffic control.

(2) Either clean up the spill (if within their scope) or call one of Caltrans' hazardous waste contractors.

(3) Provide personnel trained at the First Responder Operations level to work with hazardous waste contractors.

Notification of the Office of Emergency Services: For all hazardous material spills within the State right-of-way**,** regardless of quantity, the law enforcement agency with traffic jurisdiction shall notify the Office of Emergency Services (OES) and obtain a control number for that incident.

Contactor best practices:

The paperwork has to be completed for containerized hazardous waste to move on the roadway. CHP has the authority in event of an emergency to escort the contractor with the container to a safe place. Hazardous waste contractors should coordinate early with the CHP to ensure an additional CHP Officer is called to the scene to escort them and the containerized materials off the travelled way. A person with authority to do so still needs to sign the paperwork, but It can be done off

the travelled way if the CHP escorts the transporter and the hazardous waste to the new location, allowing the lanes to be opened while the paperwork is completed off the State route.

11 TOWING AND RECOVERY

11.1 INFORMATION NEEDED TO REQUEST TOWING

Information needed to request towing and recovery vehicles includes the Gross Vehicle Weight Rating (GVWR) of the vehicle itself, as well as any manifested load weights. Providing accurate information about the scene, vehicles and loads can ensure quick and efficient clearing of the scene and less disruption of the traffic flow.

Weight Class	Minimum GVWR (lbs)	Maximum GVWR (lbs)	VIUS * Category	Common Category
Class 1		6,000	Light-duty	**Light Duty**
Class 2	6,001	10,000	Light-duty	**Light Duty**
Class 3	10,001	14,000	Medium-duty	**Medium**
Class 4	14,001	16,000	Medium-duty	**Medium**
Class 5	16,001	19,500	Medium-duty	**Medium**
Class 6	19,501	26,000	Light-heavy	**Medium**
Class 7	26,001	33,000	Heavy-heavy	**Heavy Duty**
Class 8	33,001		Heavy-heavy	**Heavy Duty**

* VIUS: US DOT Vehicle Inventory and Use Survey

Figure 11.1—Vehicle Classifications

LIGHT DUTY

Passenger vehicles, light trucks, minivans, full-size pickups, sport utility vehicles, full-size vans

Class 1 (6000 lbs or less GVW - 4 tires)

Class 2 (6001-10,000 lbs GVW - 4 tires)

MEDIUM DUTY

Mid-size vehicles, delivery trucks, utility vehicles, motor homes, parcel trucks, ambulances, small sump trucks, landscape trucks, flatbed and stake trucks, refrigerated and box trucks, small and medium school and transit buses

Class 3 (10,001-14,000 lbs GVW - 6 or more tires)

Class 4 (14,001-16,000 lbs GVW - 6 or more tires)

Class 5 (16,001-19,500 lbs GVW - 6 or more tires)

Class 6 (19,501-26,000 lbs GVW - 6 or more tires)

HEAVY DUTY

Heavy vehicles, large delivery trucks, motor coaches, refuse trucks, cement mixers, all tractor trailer combinations including double trailers

Class 7 (26,001-33,000 lbs GVW - 6 or more tires)

Class 8 (33,001-33,000 lbs GVW - 6 or more tires)

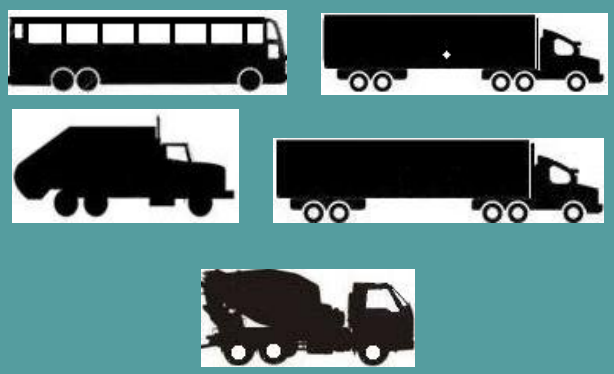

Figure 11.1—Vehicle Classifications (Cont'd)

12 HELICOPTER CONSIDERATIONS

The following information should be used as a guideline and as an aid to assist on-scene personnel. Every situation will be unique. In some cases a helicopter can be safely landed on the roadway, in others, it will need to be landed to the side of the roadway. Deviation from the following guidelines may be required to land a helicopter safely, but safety should never be compromised.

12.1 LANDING ZONE

(1) Special attention should be given to ensure the landing zone (LZ) is free of overhead obstructions such as wires, poles and antennas.

(2) The LZ should be free of people, animals and vehicles.

(3) The LZ area should have a surface that is flat, firm, and free of loose debris. If dust is suspected, wet down the area with water and inform the flight crew of this potential hazard.

(4) The surface of the LZ should be free of stumps, irrigation equipment or any other obstruction that could interfere with the helicopter's landing gear.

(5) **During nighttime operations** illuminate the LZ by positioning vehicle headlights toward the center of the LZ.

NEVER use flares or other items that can be easily blown by the helicopter downwash.

(1) **Size:** Follow these general guidelines for landing zone dimensions:

Daytime: 75 ft X 75 ft

Nighttime: 125 ft X 125 ft

12.2 LANDING THE HELICOPTER

(1) Assist the helicopter crew by using proper radio terminology. State your position as referenced to “clock” positions relative to the helicopter. The front of the helicopter is “12 o’clock”, the rear is “6 o’clock”, etc.

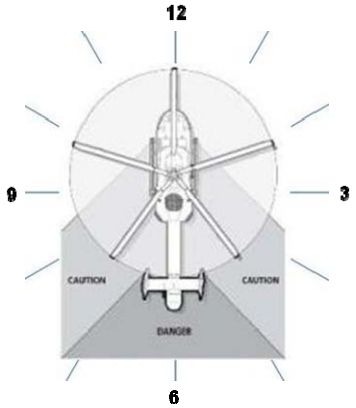

Figure 12.1—Position Relative to Helicopter

(2) Once radio communication with the helicopter is established and the aircraft is circling overhead, the person responsible for the LZ should inform the crew of the following:

(a) Location of all nearby aerial hazards, i.e., wires, poles and antennas.

(b) Describe the landing zone surface and specific touchdown area with special emphasis on potential dust and/or loose debris.

(c) Describe the wind speed and directions.

(d) Describe any issue that you believe could adversely affect flight safety.

(3) Once the aircraft is on final approach, protect the air-to-ground frequency and never hesitate to announce any previously unseen hazard to the flight crew.

12.3 ASSISTING THE HELICOPTER CREW

(1) Never approach the helicopter unless escorted by a flight crew member. Follow their direction at all times.

(2) Always stay to the front of the helicopter and in eye contact with the pilot.

(3) Be aware that sloping terrain can increase the hazard of the helicopter's rotors.

(4) Secure loose items. Never chase items that have been blown away.

(5) Hearing and eye protection should be worn.

(6) After the helicopter departs the LZ, never infiltrate the area until the pilot has called "Clear".

PAGE LEFT INTENTIONALLY BLANK

13 CALTRANS DISTRICTS AND TMCs

Figure 13.1—Caltans District Map

Caltrans TMC Locations

Headquarters Communication Center
1120 N Street, Room 3216
Sacramento, CA 95814

District 1
1656 Union Street
Eureka, CA 95501

District 2
1657 Riverside Drive
Redding, CA 96001

District 3
3165 Gold Valley Drive
Rancho Cordova, CA 95742

District 4
111 Grand Avenue
Oakland, CA 94612

District 5
50 Higuera Street
San Luis Obispo, CA 93401

District 6
1352 West Olive Avenue
Fresno, CA 93728

District 7
2901 West Broadway
Los Angeles, CA 90041

District 8
464 West Fourth Street
San Bernardino, CA 92401

District 9
500 South Main Street
Bishop, CA 93514

District 10
1976 E. Dr Martin Luther
King Jr Blvd
Stockton, CA 95205

District 11
7183 Opportunity Road
San Diego, CA 92111

District 12
6681 Marine Way
Irvine, CA 92618

14 TRAFFIC MANAGEMENT TEAMS

14.1 DISPATCH

(1) Contact Maintenance supervisors/superintendants as necessary to ensure rapid response or Maintenance personnel.

(2) Contact the TMT Leader and provide as much detail as possible on the incident so that they can decide if TMT/ IRT should be dispatched.

(3) During work hours consult with Maintenance to see how long it will take to secure a job site and make it safe before dispatching a CMS truck that is already being utilized on the jobsite (IRT).

(4) After working hours, call out lists that show geographic locations of responders and equipment should be utilized to dispatch the nearest unit and ensure rapid response. Consider queues and bypass routes when dispatching TMT/IRT personnel. The closest assets may not have the shortest response times.

14.2 DUTIES

End-of-queue management: Traffic Management Teams (TMT) and Maintenance Incident Response Teams (IRT) are responsible for using truck mounted and portable CMS to warn the travelling public of slow/stopped traffic ahead due to non-recurring congestion resulting from incidents. Signing for end-of-queue is extremely important as the advance notification reduces the risk of secondary incidents.

In many cases, it may be necessary to provide warning signs in advance of the queue in both directions due to travelers slowing on the non-incident side to look at the collision scene.

Detouring: TMT engineers are responsible for analyzing traffic patterns and coordinating with the TMC and other local agencies to identify detour routes, provide input to the TMC for detour messaging on permanent CMS and work with TMT/IRT/Maintenance to ensure detour routes are properly signed.

TMT leads are responsible for coordinating with the TMC and HCC to ensure that detour and delay information is provided to the public in a timely manner and that it is accurate.

Planning : TMT personnel are responsible for coordinating with Caltrans Traffic Operations and Maintenance, CHP, other first responders and local agencies to help plan for both planned and unplanned events and incidents.

Data gathering: A secondary function of the TMT is to gather information from the field. TMT/IRT personnel should endeavor to gather as much information as possible with regard to arrival and departure times of first responders, clearance times of incidents, time of opening of individual lanes, time of opening of all lanes, and time of queue clearance.

14.3 REPORTS

Whenever possible, the TMT Leader should coordinate with the CHP officer on scene, the Caltrans maintenance personnel on scene and the TMC to obtain as much information as possible to include dispatch, arrival and departure times for as many incident responders as possible.

Post incident debriefs should be conducted off of the highway whenever possible to determine what factors, if any, may have delayed incident clearance or early opening of lanes.

Secondary incidents that occur within queues that are caused by the incident should be documented on the original incident report. The absence of secondary incidents should also be documented when end-of-queue signing is done by TMT.

The TMT report format is available on the Traffic Operations website.

A LAWS AND AUTHORITIES

A.1 CALIFORNIA STREETS AND HIGHWAY CODE

SECTION 20

"Department" means the Department of Transportation [Caltrans] of this State.

Any reference in any law or regulation to the Department of Public Works shall be deemed to refer to the Department of Transportation.

SECTION 90

The department [Caltrans] shall have full possession and control of all state highways and all property and rights in property acquired for state highway purposes.

SECTION 92

The department [Caltrans] may do any act necessary, convenient or proper for the construction, improvement, maintenance or use of all highways which are under its jurisdiction, possession or control.

SECTION 124

The department [Caltrans] may restrict the use of, or close, any State highway whenever the department considers such closing or restriction of use necessary:

(a) For the protection of the public.

(b) For the protection of such highway from damage during storms or during construction, improvement or maintenance operations thereon.

SECTION 125

To notify the public that a state highway is closed or its use restricted, the department [Caltrans] may:

(a) Erect suitable barriers or obstructions upon such highway.

(b) Post warnings and notices of the condition of any such highway.

(c) Post signs for the direction of traffic upon it, or to or upon any other highway or detour open to public travel.

(d) Place warning devices on such highway.

(e) Assign a flagman to warn, detour or direct traffic on such highway.

SECTION 127

The California Highway Patrol shall cooperate with the department [Caltrans] in the enforcement of the closing, or restriction of use, of any State highway.

A.2 CALIFORNIA VEHICLE CODE

SECTION 290 - DEFINITION OF DEPARTMENT

"Department" means the Department of Motor Vehicles [DMV] except, when used in Chapter 2 (commencing with Section 2100) of Division 2 and in Divisions 11 (commencing with Section 21000), 12 (commencing with Section 24000), 13 (commencing with Section 29000), 14

(commencing with Section 31600), 14.1 (commencing with Section 32000), 14.3 (commencing with Section 32100), 14.5 (commencing with Section 33000), 14.7 (commencing with Section 34000), and 14.8 (commencing with Section 34500), it shall mean the Department of the California Highway Patrol [CHP].

SECTION 2400 - TRAFFIC DIRECTION

[CHP] has full responsibility and primary jurisdiction for the administration and enforcement of the laws, and for the investigation of traffic accidents, on all toll highways and state highways constructed as freeways, including transit-related facilities located on or along the rights-of-way of those toll highways or freeways, except facilities of the San Francisco Bay Area Rapid Transit District. However, city police officers while engaged primarily in general law enforcement duties may incidentally enforce state and local traffic laws and ordinances on toll highways and state freeways within incorporated areas of the state. In any city having either a population in excess of 2,000,000 or an area of more than 300 square miles, city police officers shall have full responsibility and primary jurisdiction for the administration and enforcement of those laws and ordinances, unless the city council of the city by resolution requests administration and enforcement of those laws by [CHP].

SECTION 2410 - TRAFFIC DIRECTION

Members of the California Highway Patrol are authorized to direct traffic according to law, and in the event of a fire or other emergency, or to expedite traffic or ensure safety, may direct traffic as conditions may require notwithstanding the provisions of this code.

SECTION 2454 - SCENE MANAGEMENT: HAZARDOUS MATERIAL SPILL

(a) The authority for the management of the scene of an on-highway hazardous substance spill or disaster is vested in the appropriate law enforcement agency having primary traffic investigative authority on the highway where the spill or disaster occurs. Responsibility for managing the scene of an on-highway hazardous substance spill or disaster shall continue until all emergency operations at the scene have been completed and order has been restored.

(b) Notwithstanding subdivision (a), the local governing body of a city, whether general law or chartered, which has jurisdiction over the location where an on-highway hazardous substance spill or disaster occurs may assign the authority for management of the scene of an on-highway hazardous substance spill or disaster on local streets and roads, other than freeways, to either the local law enforcement agency or the local fire protection agency. However, the Department [CHP] is responsible for the management of the scene of an on-highway hazardous substance spill or disaster on all highways where the Department [CHP] has primary traffic investigative authority. Any law enforcement agency having primary traffic investigative authority may enter into written agreements with other public agencies to facilitate management at the scene of an on-highway hazardous substance spill or disaster on local streets and roads other than freeways.

(c) For purposes of this section, "management of the scene of an on-highway hazardous substance spill or disaster" means coordination of operations which occur at the location of a

hazardous substance spill or disaster. This coordinating function does not include how the specialized functions provided by the various other responding agencies are to be performed. The agency managing the scene of an on-highway hazardous spill or disaster shall consult with other response agencies at the scene to ensure that all appropriate resources are properly utilized. The agency managing the scene of an on-highway hazardous spill or disaster shall perform its coordinating function in a manner designed to minimize the risk of death or injury to other persons.

SECTION 20002 - DUTY WHERE PROPERTY DAMAGED **(STEER CLEAR LAW)**

Permissible Action: Duty Where Property Damaged 20002.
(a) The driver of any vehicle involved in an accident resulting only in damage to any property, including vehicles, shall immediately stop the vehicle at the nearest location that will not impede traffic or otherwise jeopardize the safety of other motorists. Moving the vehicle in accordance with this subdivision does not affect the question of fault. The driver shall also immediately do either of the following:

(1) Locate and notify the owner or person in charge of that property of the name and address of the driver and owner of the vehicle involved and, upon locating the driver of any other vehicle involved or the owner or person in charge of any damaged property, upon being requested, present his or her driver's license, and vehicle registration, to the other driver, property owner, or person in charge of that property. The information presented shall include the current residence address of the driver and of the registered owner. If the registered owner of an involved vehicle is present at the scene, he or she shall also, upon request, present his or her driver's license information, if available, or other valid identification to the other involved parties.

(2) Leave in a conspicuous place on the vehicle or other property damaged a written notice giving the name and address of

the driver and of the owner of the vehicle involved and a statement of the circumstances thereof and shall without unnecessary delay notify the police department of the city wherein the collision occurred or, if the collision occurred in unincorporated territory, the local headquarters of the Department of the California Highway Patrol.

(b) Any person who parks a vehicle which, prior to the vehicle again being driven, becomes a runaway vehicle and is involved in an accident resulting in damage to any property, attended or unattended, shall comply with the requirements of this section relating to notification and reporting and shall, upon conviction thereof, be liable to the penalties of this section for failure to comply with the requirements.

(c) Any person failing to comply with all the requirements of this section is guilty of a misdemeanor and, upon conviction thereof, shall be punished by imprisonment in the county jail not exceeding six months, or by a fine not exceeding one thousand dollars ($1,000), or by both that imprisonment and fine.

SR61(CA)

CA MUTCD 2012 sign chart

SECTION 21367 - RESTRICTION OF MOVEMENT IN A WORK AREA

(a) As provided in Section 125 of the Streets and Highways Code and in Section 21100 of this code, respectively, the duly authorized representative of the Department of Transportation or local authorities, with respect to highways under their respective jurisdictions, including, but not limited to, persons contracting to perform construction, maintenance, or repair of

a highway, may, with the approval of the department [Caltrans] or local authority, as the case may be, and while engaged in the performance of that work, restrict the use of, and regulate the movement of traffic through or around, the affected area whenever the traffic would endanger the safety of workers or the work would interfere with or endanger the movement of traffic through the area. Traffic may be regulated by warning signs, lights, appropriate control devices, or by a person or persons controlling and directing the flow of traffic.

(b) It is unlawful to disobey the instructions of a person controlling and directing traffic pursuant to subdivision (a).

(c) It is unlawful to fail to comply with the directions of warning signs, lights, or other control devices provided for the regulation of traffic pursuant to subdivision (a).

SECTION 21806 - YIELDING TO EMERGENCY VEHICLES

Upon the immediate approach of an authorized emergency vehicle which is sounding a siren and which has at least one lighted lamp exhibiting red light that is visible, under normal atmospheric conditions, from a distance of 1,000 feet to the front of the vehicle, the surrounding traffic shall, except as otherwise directed by a traffic officer, do the following:

(a) (1) Except as required under paragraph (2), the driver of every other vehicle shall yield the right-of-way and shall immediately drive to the right-hand edge or curb of the highway, clear of any intersection, and thereupon shall stop and remain stopped until the authorized emergency vehicle has passed.

(2) A person driving a vehicle in an exclusive or preferential use lane shall exit that lane immediately upon determining that the exit can be accomplished with reasonable safety.

(b) The operator of every street car shall immediately stop the street car, clear of any intersection, and remain stopped until the authorized emergency vehicle has passed.

(c) All pedestrians upon the highway shall proceed to the nearest curb or place of safety and remain there until the authorized emergency vehicle has passed.

SECTION 21807 - EMERGENCY VEHICLE DRIVER REGARD TO DUE SAFETY

The provisions of Section 21806 shall not operate to relieve the driver of an authorized emergency vehicle from the duty to drive with due regard for the safety of all persons and property.

SECTION 21809 - STATIONARY EMERGENCY VEHICLE OR TOW TRUCK **(MOVE OVER LAW)**

(a) A person driving a vehicle on a freeway approaching a stationary authorized emergency vehicle that is displaying emergency lights, a stationary tow truck that is displaying flashing amber warning lights, or a stationary marked Department of Transportation vehicle that is displaying flashing amber warning lights, shall approach with due caution and, before passing in a lane immediately adjacent to the authorized emergency vehicle, tow truck, or Department of Transportation vehicle, absent other direction by a peace officer, proceed to do one of the following:

(1) Make a lane change into an available lane not immediately adjacent to the authorized emergency vehicle, tow truck, or Department of Transportation vehicle, with due regard for safety and traffic conditions, if practicable and not prohibited by law.

(2) If the maneuver described in paragraph (1) would be unsafe or impracticable, slow to a reasonable and prudent speed that is safe for existing weather, road, and vehicular or pedestrian traffic conditions.

(b) A violation of subdivision (a) is an infraction, punishable by

a fine of not more than fifty dollars ($50).

(c) The requirements of subdivision (a) do not apply if the stationary authorized emergency vehicle that is displaying emergency lights, the stationary tow truck that is displaying flashing amber warning lights, or the stationary marked Department of Transportation vehicle that is displaying flashing amber warning lights is not adjacent to the freeway or is separated from the freeway by a protective physical barrier.

SECTION 23113 - REMOVAL OF MATERIAL FROM THE HIGHWAY

(a) Any person who drops, dumps, deposits, places, or throws, or causes or permits to be dropped, dumped, deposited, placed, or thrown, upon any highway or street any material described in Section 23112 or in subdivision (d) of Section 23114 shall immediately remove the material or cause the material to be removed.

(b) If the person fails to comply with subdivision (a), the governmental agency responsible for the maintenance of the street or highway on which the material has been deposited may remove the material and collect, by civil action, if necessary, the actual cost of the removal operation in addition to any other damages authorized by law from the person made responsible under subdivision (a).

(c) A member of the Department of the California Highway Patrol may direct a responsible party to remove the aggregate material described in subdivision (d) of Section 23114 from a highway when that material has escaped or been released from a vehicle.

(d) Notwithstanding any other provision of law, a government agency described in subdivision (b), the Department of the California Highway Patrol, or the employees or officers of those agencies, may not be held liable for any damage to material, to cargo, or to personal property caused by a negligent act or omis-

sion of the employee or officer when the employee or officer is acting within the scope and purpose of subdivision (b) or (c). Nothing in this subdivision affects liability for purposes of establishing gross negligence or willful misconduct. This subdivision applies to the negligent performance of a ministerial act, and does not affect liability under any provision of law, including liability, if any, derived from the failure to preserve evidence in a civil or criminal action.

A.3 MISCELLANEOUS CODES, DIRECTIVES AND ORDERS

CALIFORNIA CODE OF REGULATIONS, TITLE 19, DIV. 2, SEC. 2400-2450

a. These regulations establish the Standardized Emergency Management System (SEMS) based upon the Incident Command System (ICS) adapted from the system originally developed by the Firefighting Resources of California Organized for Potential Emergencies program and its elements including those currently in use by state agencies, the Multi-Agency Coordination System, the operational area concept, the Master Mutual Aid Agreement and related mutual aid systems.

b. Standardized Emergency Management System is intended to standardize response to emergencies involving multiple jurisdictions or multiple agencies. SEMS is intended to be flexible and adaptable to the needs of all emergency responders in California. SEMS requires emergency response agencies to use basic principles and components of emergency management including ICS, multiagency or inter-agency coordination, the operational area concept, and established mutual aid systems. State agencies must use SEMS. Since December 1, 1996, local governments must use SEMS in order to be eligible for state funding of response-related personnel costs pursuant to activities identified in California Code of Regulations, Title 19, §2920, §2925, and §2930. Individual agencies' roles and responsibilities contained in existing laws or the state emergency plan are not superseded by these regulations.

HOMELAND SECURITY PRESIDENTIAL DIRECTIVE - 5 (February 23, 2003).

Homeland Security Presidential Directive-5 directed the Secretary of Homeland Security to develop and administer a National Incident Management System (NIMS). NIMS provides a consistent nationwide template to enable government, private-sector, and non-governmental organizations to work together during domestic incidents.

EXECUTIVE ORDER S-2-05 (February 8, 2005)

Directed the Office of Emergency Services and Office of Homeland Security, in cooperation with the Standardized Emergency Management System Advisory Board, to develop a program to integrate the NIMS, to the extent appropriate, into SEMS. (As of January 1, 2009 OES/OHS became California Emergency Management Agency (Cal EMA).

PENAL CODE, SEC. 409.3, EMERGENCY MEDICAL SERVICES

a. Whenever law enforcement officers and emergency medical technicians are at the scene of an accident, management of the scene of the accident shall be vested in the appropriate law enforcement agency, whose representatives shall consult with representatives of other response agencies at the scene to ensure all appropriate resources are properly utilized. However, authority for patient care management at the scene of an accident shall be determined in accordance with Section 1798.6 of the Health and Safety Code.

b. For the purposes of this section, "management of the scene of an accident" means the coordination of operations which occur at the location of an accident.

HEALTH AND SAFETY CODE, SEC. 1798.6, MEDICAL EMERGENCIES—LINES OF AUTHORITY

a. Authority for patient health care management in an emergency shall be vested in that licensed or certified health care professional, which may include any paramedic or other pre-hospital emergency personnel, at the scene of the emergency who is most medically qualified specific to the provision of rendering emergency medical care. If no licensed or certified health care professional is available, the authority shall be vested in the most appropriate medically qualified representative of public safety agencies who may have responded to the scene of the emergency.

b. If any county desires to establish a unified command structure for patient management at the scene of an emergency within that county, a committee may be established in that county comprised of representatives of the agency responsible for county emergency medical services, the county sheriff's department, the California Highway Patrol, public pre-hospital care provider agencies serving the county, public fire, police, and other affected emergency service agencies within the county. The membership and duties of the committee shall be established by an agreement for the joint exercise of powers under Chapter 5 (commencing with Section 6500) of Division 7 of Title 1 of the Government Code.

c. Notwithstanding subdivision (a), authority for the management of the scene of an emergency shall be vested in the appropriate public safety agency having primary investigative authority. The scene of an emergency shall be managed in a manner designed to minimize the risk of death or health impairment to the patient and to other persons who may be exposed to the risks as a result of the emergency condition, and priority shall be placed upon the interests of those persons exposed to the more serious and immediate risks to life and health. Public safety officials shall consult emergency medical service personnel or other authoritative health care professionals at the scene in the determination of relevant risks.

B CALTRANS EQUIPMENT

Dump Truck, 10 cu yd (also 4 cu yd)

Fork Lift, 2 Ton (also 3, 4, 7-1/2 and 10 Ton)

Grader, 180 HP (also 130 and 150 HP)

Loader, Front End, 1.5 cu yd (also 1/4, 2-1/2 and 3 cu yd)

Personnel Hoist, 40 ft (also 45, 50 and 65 ft)

Pusher Truck (for semis with no traction)

Sweeper, High Dump, 4 cu yd

Tanker, 3000 gallon

Tractor, Wheel, 75 HP w/ backhoe/loader (also 55, 95 and 110 HP)

Tractor, Crawler, 165 HP w/dozer (also 110 and 65 HP)

Wrecker. 16-ton (also 4-ton)

Truck Mounted CMS

Portable CMS Trailer

Arrow Board

Glossary

The following terms shall be used during incident operations, post-incident analysis, and training activities related to working in or near moving traffic.

Activity Area - the protected work area at a vehicle-related roadway incident that is shielded by the block from apparatus and other emergency vehicles.

Advance Warning - notification procedures that advise approaching motorists to transition from normal driving status to that required by the temporary emergency traffic control measures ahead of them.

Block - positioning a response vehicle (typically a fire engine) on an angle to the lanes of traffic creating a physical barrier between upstream traffic and the work area. Includes 'block to the right' or' block to the left'.

Buffer Zone - the space between personnel and vehicles in the protected work zone and nearby moving traffic.

Common Incident Management Sign Colors - Per the Manual on Uniform Traffic Control Devices (MUTCD), black letters on an orange or fluorescent pink background are authorized colors.

Downstream - the direction that traffic is moving as it travels away from the incident scene.

Fend-off Position: The location of the fire truck that is placed at a 30 degree angle to the road to deflect any errant vehicles that might strike the fire truck accidently.

Incident - FHWA has defined an incident as: "Any non-recurring event that causes a reduction of roadway capacity or an abnormal increase in demand."

Incident Clearance Time: The interval defined as the time between the first recordable awareness of the incident and the time at which the last responder has left the scene..

Incident Commander - The Incident Commander has overall responsibility for managing the entire incident. The Incident Commander is specifically responsible for: ensuring incident safety; providing information services to internal/ external stakeholders; and establishing and maintaining liaison with other agencies participating in the incident.

Incident (Reportable) - CHP and Caltrans have defined a reportable incident as: "An unplanned, non-recurring event that reduces highway capacity that requires both agencies to respond to the incident scene.

Lateral Buffer Zone: Created when the front bumper of the fire truck is positioned at least two feet from the longitudinal pavement marking line. Designed to reduce encroachment into designated traffic lanes.

Look Out - a trained first responder assigned to monitor approaching traffic and activate an emergency signal if the actions of a motorist do not conform to established traffic control measures in place at the highway scene.

Roadway Clearance Time: The interval between the first recordable awareness of an incident (detection, notification, or verification) by a responding agency and first confirmation that all lanes are available for traffic flow.

Safe-Positioned - the positioning of emergency vehicles at an incident in a manner that attempts to protect both the responders performing their duties and road users traveling through the incident scene, while minimizing, to the extent practical, disruption of the adjacent traffic flow.

Secondary Incidents: unplanned incidents for which a re-

sponse or intervention is taken, where a collision occurs either a) within the incident scene or b) within the queue (which could include opposite direction) resulting from the original incident.

Taper - the action of merging several lanes of moving traffic into fewer moving lanes.

Temporary Traffic Control Zone - an area of a highway within which emergency personnel perform their fire, EMS and rescue tasks at a vehicle-related incident, where road user conditions are changed by the use of temporary traffic control devices, flaggers, uniformed law enforcement officers, or other authorized personnel.

Transition Zone - the lanes of a roadway within which approaching motorists change their speed and position to comply with the traffic control measures established at an incident scene.

Upstream - the direction that traffic is traveling from as the vehicles approach the incident scene.

Acronyms

The following acronyms and abbreviations, when used in this Manual, shall have the following meanings:

AADT - Annual Average Daily Traffic

AASHTO - American Association of State Highway and Transportation Officials

ADT - Average Daily Traffic

ANSI - American National Standards Institute

Caltrans - California Department of Transportation

CAD - Computer Aided Dispatch

CCTV - Closed Circuit Television

CHIN - California Highway Information Network]

CHP - California Highway Patrol

CMS - Changeable Message Sign

CT - Caltrans

EMS - Emergency Medical Services

FHWA - Federal Highway Administration

FSP - Freeway Service Patrol

HAR - Highway Advisory Radio

IC - Incident Commander

ICS - Incident Command System

ICP - Incident Command Post

HOV - High-Occupancy Vehicle

MUTCD - Manual on Uniform Traffic Control Devices

NFPA - National Fire Protection Association

NIMS - National Incident Management System

NTIMC– National Traffic Incident Management Coalition

PCMS - Portable Changeable Message Sign

SEMS - Standardized Emergency Management System

TIM - Traffic Incident Management

TMA - Truck Mounted Attenuator

TMCAL - Transportation Management Center Activity Logging

TRAA - Towing and Recovery Assistance of America

TMT - Traffic Management Team

TTC - Temporary Traffic Control

TTI - Texas Transportation Institute

VPH or vph - Vehicles Per Hour

California Organizations and Associations

California Ambulance Association
2520 Venture Oaks Way, Suite 150
Sacramento, CA 95833
Toll Free: 1-877-276-1410
Tele: 916-239-4098
Fax: 916-924-7323
http://www.the-caa.org/index.html

California Department of Transportation
1120 N Street
Sacramento, CA 95814
Tele: 916-654-5266
http://www.dot.ca.gov

California Emergency Management Agency
Law Enforcement Division
3650 Schriever Ave., Mather, CA 95655
Tele: 916-845-8700
24-hr 916-845-8911
http://www.calema.ca.gov/

California Fire Chiefs Association
1333 Huntoon Street
Oroville, CA 95965
Tele: 530-534-4692 Fax: 530-534-4694
http://www.calchiefs.org/

California Hazardous Materials Investigator Association
915 L Street, Suite C PMB197

Sacramento, CA 95814
http://www.chmia.com/index.asp

California Highway Patrol
P.O. Box 942898
Sacramento, CA 94298
Tele: 916-843-3000
http://www.chp.ca.gov

California Police Chiefs Association
P.O. Box 255745
Sacramento, CA 95865-5745
Tele: 916-481-8000
Fax: 916-481-8008
http://californiapolicechiefs.org/

California State Coroners Association
Attn: Scotty Hill, Executive Secretary
5925 Maybrook Circle
Riverside, CA 92506-4549
Tele: 951-788-2656
http://coroners.org/

California State Firefighters' Association
2701 K Street, Suite 201
Sacramento, CA 95816
Toll Free: 1-800-451-2732
Fax: 916-446-9889
http://www.csfa.net

California State Sheriffs' Association
1231 I Street Suite 200
Sacramento, CA 95814
Tele: 916-375-8000 Fax: 916-375-8017
http://www.calsheriffs.org/

California Tow Truck Association
3050 Beacon Blvd, Suite 100
West Sacramento, CA 95691
Tele: (916) 617-2882