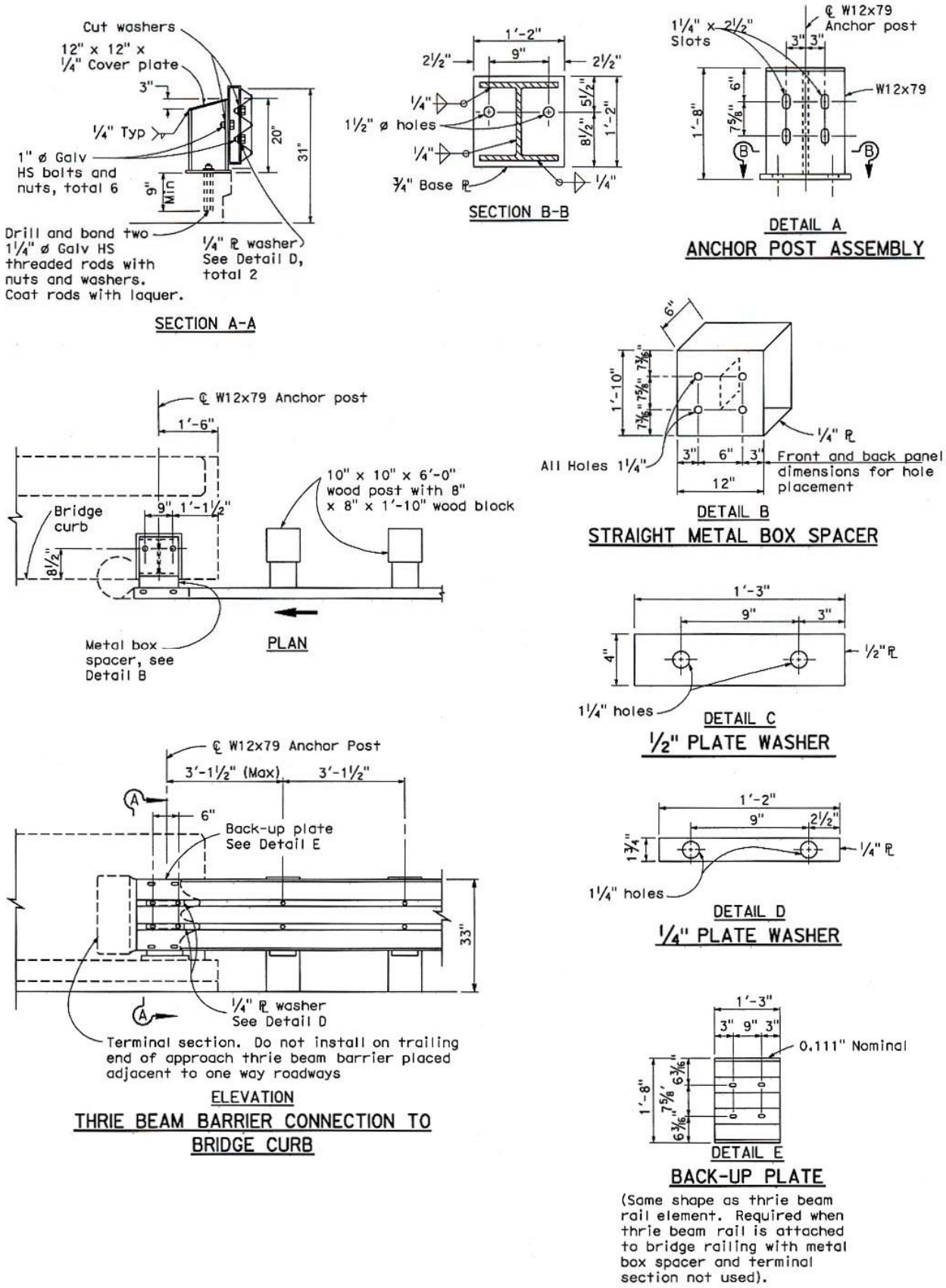Figure 7-17: Thrie Beam Connection to Bridge Curbs