Figure 7-11a: Adjustable Height Guardrail (2 Hole Post)

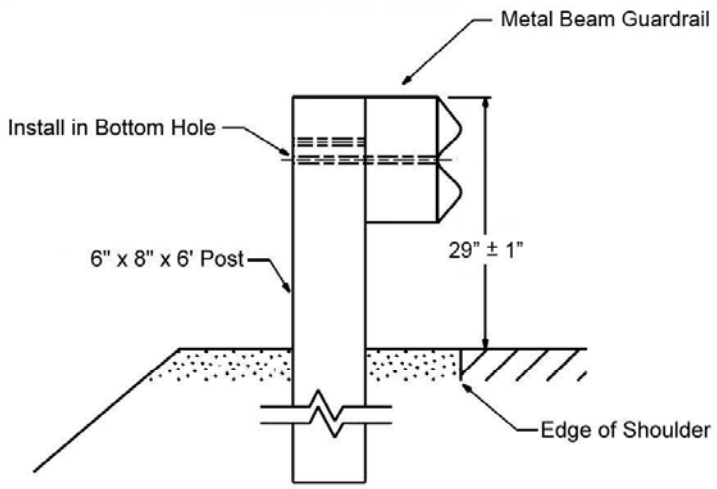

Initial Installation

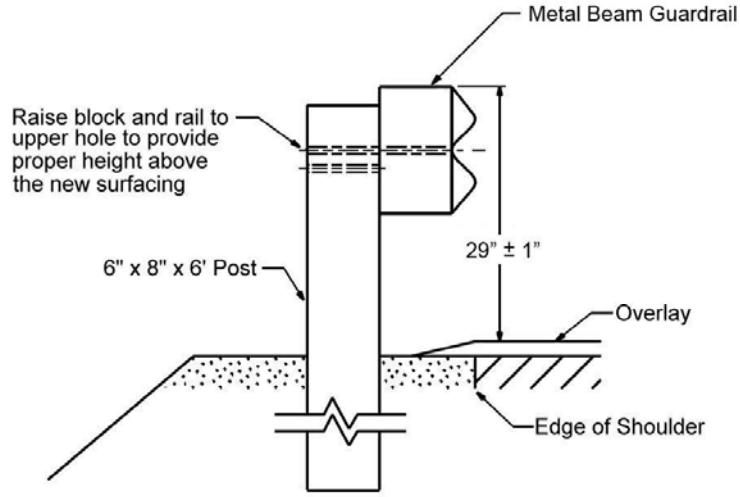

Adjusted Rail Height

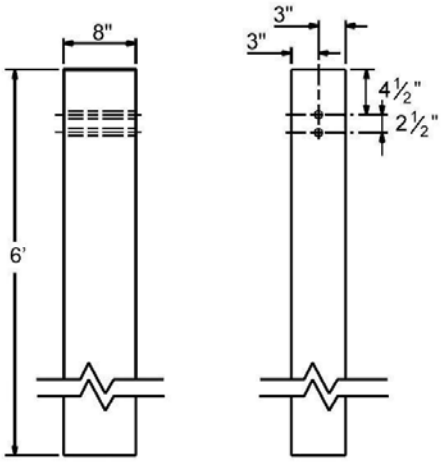

2-Hole Post Detail

NOTES:

1. All holes in wood posts and blocks shall be ¾" diameter ± 1/16"
2. For additional details, see Standard Plans.