SIGNAL STANDARD SCHEDULE

	No.	TYPE	FOUND. TYPE	PED. PUSH BUT'N TYPE	PED. PUSH BUT'N PHASE	REMARKS
*	(1)	332 Cab.	F-332			ATSAC 2070 Controller in 332 Cabinet
*	(2)	CD954	F-2			
**	(3)	CD951A	BSL	APS	–	INSTALL APS
**	(4)	1	F-1	APS	–	INSTALL APS
**	(5)	CD953B	BSL	APS	4	INSTALL APS
**	(6)	17-3-100	CIDH(***)	APS	4	INSTALL APS
*	(7)	1	F-2			
**	(8)	17-3-100	CIDH(***)			
**	(9)	1	F-1	APS	–	INSTALL APS
**	(10)	CD951A	BSL	APS	–	INSTALL APS
**	(11)	1	F-1	APS	8	INSTALL APS
**	(12)	17-3-100	CIDH(***)	APS	8	INSTALL APS (****)
*	(13)	1	F-2			

* Existing ** New

*** Standard and Foundation Per LADOT STD. Dwg. No. S-52.1.6, Signed April 26, 2012.

**** Modify 17-3-100 to 27' standard height.

ESTIMATED MATERIAL FURNISHED BY LADOT

UNITS	MATERIAL

ESTIMATED SALVAGE MATERIAL TO BE RETURNED TO LADOT

UNITS	MATERIAL
ALL	REMOVED LED PED. & LED TRAFFIC SIGNAL HEADS

CONDUCTOR SCHEDULE

SIZE No.	CABLE / WIRE	RUN 1	2	3	4	5	6	7	8	9	10	11	12	13	14	15	16	17	18	19	20	21	22	23	24	25	26	27	28	29	30	31	32	33	34	35
MULTI	5 CONDUCTOR CABLE 5 X #14	4				3		1			2		2			4				2		2				1										
	9 CONDUCTOR CABLE 8 X #14 & 1 X #12(COM)																																			
	13 CONDUCTOR CABLE 12 X #14 & 1 X #12(COM)								1			1									1						1									
	28 CONDUCTOR CABLE 27 X #14 & 1 X #10(COM)	1	1	1										1	1		1	1					1													
6	SERVICE																																			
8	BONDING (GROUND)																																			
14	PED PUSH BUTTON	2									2					2					2															
18	DLC (2 PAIR)			1	1		2		2	1		1			1	4			1	5				1	1	2			2		3	8				
18	DLC (EXISTING)																																			
18	DLC (3 PAIR)																																			
14	APS (5 CONDUCTOR CABLE)					1		1	1		2	2	2							2	2	2				1	1	1								
14	INTERCONNECT (7 WIRE)																																			
22	INTERCONNECT (12 PAIR)																																			
	CONDUIT SIZE	2"	2"	*	*	2"	2"	2"	3"	*	2"	3"	2"	*	*	2"	2"	*	*	2"	3"	2"	*	*	2"	2"	*	*	*	*							

* FOR EXISTING CONDUIT RUNS DESIGNATED WITH AN "*" (ABOVE), THE CONTRACTOR SHALL ADD/INSTALL NEW CONDUCTORS/CABLES AND PROTECT AND MAINTAIN ALL EXISTING CONDUCTORS/CABLES.

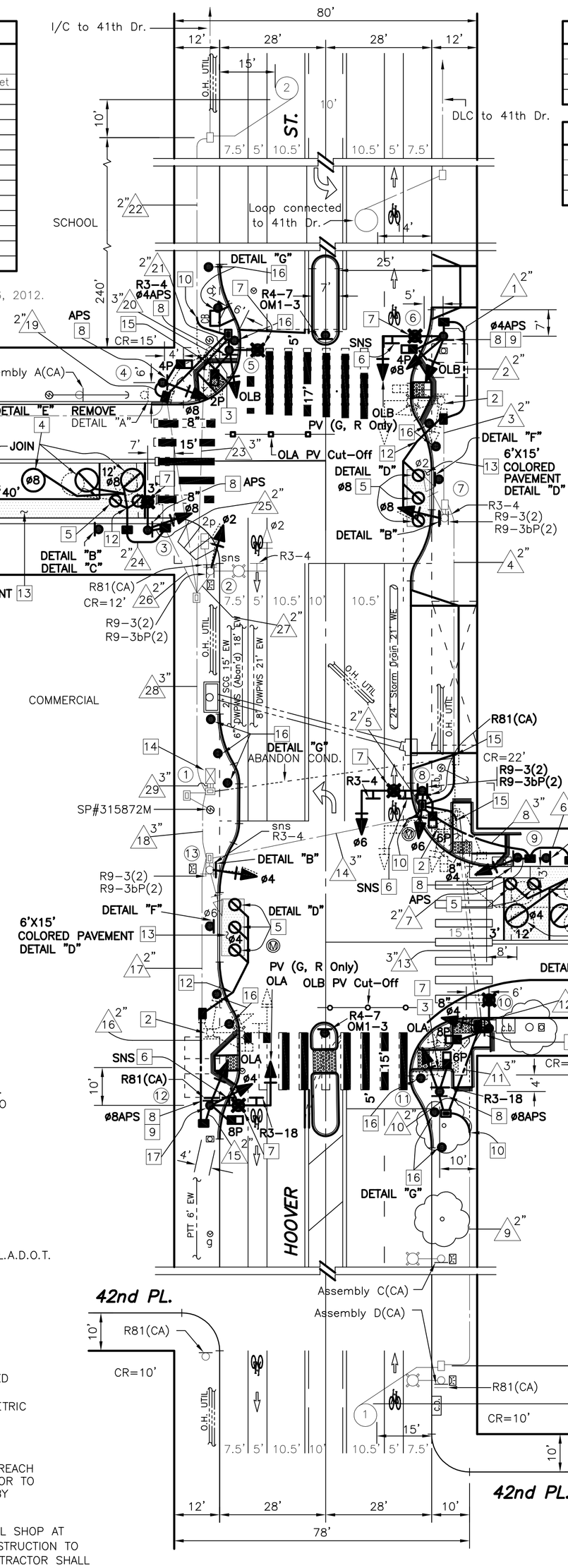

DETAIL "A"
(Not to Scale)

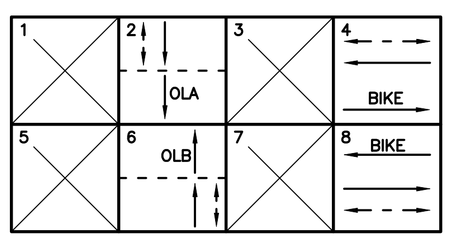

PROPOSED PHASE DIAGRAM

NOTES:

1. SEMI-ACTUATED OPERATION (ATSAC 2070 CONTROLLER IN 332 CABINET)

   ø2 – HOOVER ST. S/B (APPROACH) & W/S PED. XING
   ø4 – 42nd ST. W/B & N/S PED. XING
   ø6 – HOOVER ST. N/B (APPROACH) & E/S PED. XING
   ø8 – 42nd ST. E/B & S/S PED. XING
   OLA – HOOVER ST. S/B (LEAVE)
   OLB – HOOVER ST. N/B (LEAVE)

   EXPOSITION PARK ATCS
   ATSAC CABLE INTERCONNECT

2. REMOVE STANDARD, MAST ARM AND FOUNDATION; ABANDON CONDUITS.
3. REMOVE EXISTING TRAFFIC SIGNAL EQUIPMENT, STANDARD, PULLBOX, FOUNDATION AND ABANDON EXISTING CONDUIT(S).
4. INSTALL LOOPS PER LADOT STD. DWG. NO. S-70.1.A & S-70.1.D CASE II. CONTRACTOR SHALL OBTAIN APPROVAL FROM LADOT INSPECTOR PRIOR TO INSTALLATION OF ANY LOOPS.
5. INSTALL BICYCLE DETECTOR LOOPS PER LADOT STD. DWG. NO. S-70.1D AND LOOPS DETECTOR PLACEMENT PER DETAILS AS SHOWN ON PLAN. CONTRACTOR SHALL OBTAIN APPROVAL FROM LADOT INSPECTOR PRIOR TO INSTALLATION OF ANY LOOPS.
6. RELOCATE STREET-NAME SIGN TO NEW MAST ARM/STANDARD.
7. SEE STREET LIGHTING SHEET FOR WORK ON STREET LIGHTING FACILITIES.
8. INSTALL ACCESSIBLE PEDESTRIAN SIGNAL (APS) TYPE PUSHBUTTON PER L.A.D.O.T. STANDARD DWG. NO. S-73.2.
9. INSTALL A FIVE (5) CONDUCTOR CABLE TO CONNECT THE ACCESSIBLE PEDESTRIAN SIGNAL (APS) TYPE PUSHBUTTON TO PEDESTRIAN SIGNAL HEAD THAT HAS THE SAME PHASE.
10. INTERCEPT CONDUIT AND EXTEND CONDUIT(S) INTO PULLBOX.
11. CONTRACTOR SHALL BE RESPONSIBLE FOR LABOR AND MATERIAL INVOLVED IN THE REMOVAL, MARKOUT, AND INSTALLATION OF ALL SIGNS, STRIPING, AND PAVEMENT MARKINGS SHOWN ON THIS PLAN AND PER LADOT GEOMETRIC PLAN No.: A-6969.
12. INSTALL STUB-OUT PER LADOT STD. DWG. NO. S-70.1A.
13. CONTRACTOR SHALL CONTACT MICHELLE MOWERY OF LADOT, BICYCLE OUTREACH AND PLANNING AT (213) 972-4962 WITHIN TEN (10) WORKING DAYS PRIOR TO INSTALLATION OF GREEN PAVEMENT MARKINGS. APPROVAL IS REQUIRED BY LADOT PRIOR TO INSTALLATION OF GREEN COLORED PAVEMENT MARKINGS.
14. FIELD MODIFICATION OF CONTROLLER REQUIRED. NOTIFY THE LADOT SIGNAL SHOP AT (213) 473-8468 FIFTEEN (15) WORKING DAYS PRIOR TO START OF CONSTRUCTION TO INSTALL NEW CONFLICT MONITOR AND CONTROLLER TIMING PACKAGE. CONTRACTOR SHALL PROVIDE AND MAKE ALL CONTROLLER MODIFICATIONS AND INSTALL THE NEW CONFLICT MONITOR IN THE EXISTING CONTROLLER CABINET TO ACCOMMODATE THE PROPOSED PHASING.

NOTES: (CONT.)

15. REMOVE PULLBOX; JOIN AND EXTEND CONDUIT(S) INTO PULLBOX.
16. CONTRACTOR SHALL PROVIDE AND INSTALL K-71 WHITE FLEXIBLE POSTS. SEE DETAIL "G"
17. CONTRACTOR SHALL CUT THE PROPOSED 17-3-100 POLE TO 27' STANDARD HEIGHT FOR THE CLEARANCE OF THE POWER OVERHEAD WIRES.
18. CONTRACTOR SHALL RE-USE EXISTING STUB-OUT. IF STUB-OUT IS NOT IN PLACE, CONTRACTOR SHALL INSTALL NEW STUB-OUT PER LADOT STD. DWG. NO. S-70.1A.
19. CONTRACTOR SHALL CONTACT LADOT SIGNAL DESIGN SECTION AT (213) 972-5005 FOR ANY SIGNAL RELATED PROBLEMS ENCOUNTERED DURING CONSTRUCTION.
20. ALL NEW VEHICLE AND COUNTDOWN PEDESTRIAN TRAFFIC SIGNAL HEADS SHALL BE LED MODULES, PER LADOT SPECIFICATION 92-088-06 (LATEST EDITION).
21. CONTRACTOR SHALL OBSERVE POLES 5, 6, 8, 12 AND ALL INDUSTRY SAFETY STANDARDS, PARTICULARLY SECTION 2946 AND 2948 OF TITLE 8 OF CAL-OSHA REGARDING WORK NEAR OVERHEAD LINES.
23. THIS PLAN ASSUMES COMPLETION OF HOOVER ST. BIKE LANE PROJECT, PROJECT NO.: TGF13001, GEOMETRIC DESIGN DWG. A-6258, DATED: 08/13/14.
24. SEE CIVIL SHEETS FOR WORK ON ROADWAY, CATCH BASINS, SIDEWALKS AND CURB RAMPS.

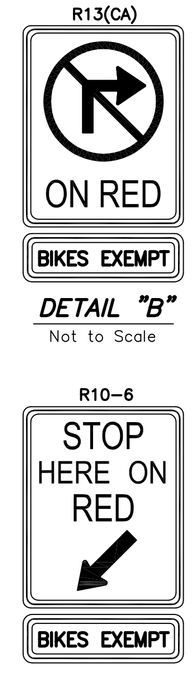

DETAIL "B"
Not to Scale

DETAIL "C"
Not to Scale

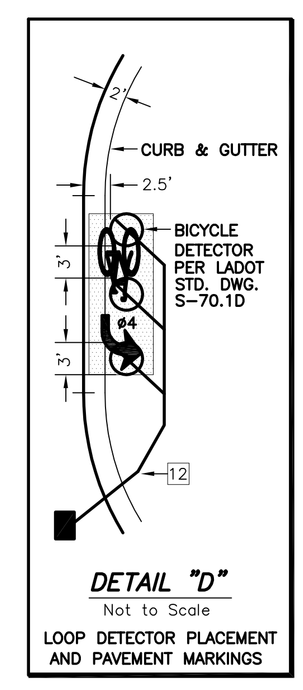

DETAIL "D"
Not to Scale
LOOP DETECTOR PLACEMENT AND PAVEMENT MARKINGS

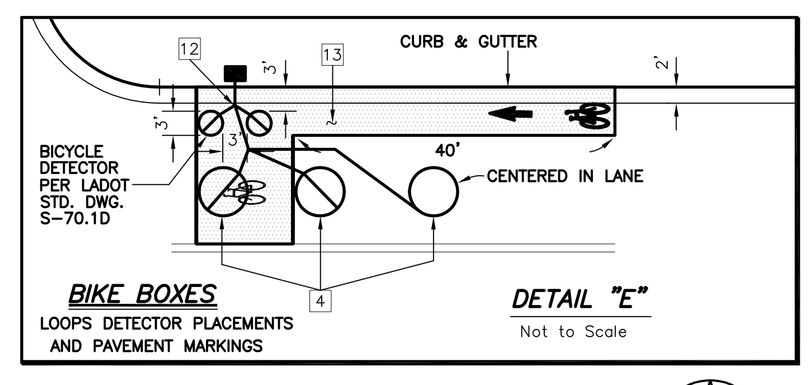

BIKE BOXES
LOOPS DETECTOR PLACEMENTS AND PAVEMENT MARKINGS

DETAIL "E"
Not to Scale

NOTICE TO CONTRACTOR

1. EXCEPT WHERE OTHERWISE INDICATED, MATERIALS AND INSTALLATION METHODS SHALL CONFORM TO THE LATEST EDITION, WITH SUPPLEMENTS, OF THE STANDARD SPECIFICATIONS FOR PUBLIC WORKS CONSTRUCTION, ADOPTED BY THE CITY OF LOS ANGELES BOARD OF PUBLIC WORKS (LABPW), INCLUDING THE LATEST VERSION OF STANDARD PLAN S-610 ISSUED BY THE LABPW, AND THE LATEST EDITION, WITH AMENDMENTS, OF THE SPECIAL PROVISIONS AND STANDARD DRAWINGS FOR THE INSTALLATION AND MODIFICATION OF TRAFFIC SIGNALS, ISSUED BY THE CITY OF LOS ANGELES DEPARTMENT OF TRANSPORTATION (LADOT).

2. ALL TRAFFIC SIGNAL AND/OR RELATED ELECTRICAL WORK SHALL BE PERFORMED AND INSPECTED UNDER THE CONDITIONS OF THE MOST CURRENT AMENDED BOARD OF PUBLIC WORKS "ENHANCED ELECTRICAL SAFETY POLICY" AS REQUIRED IN LADOT'S SPECIAL PROVISIONS AND STANDARD DRAWINGS FOR THE INSTALLATION AND MODIFICATION OF TRAFFIC SIGNALS (RED BOOK), REGARDLESS OF CONTRACT COST.

3. THE LADOT TRAFFIC SIGNAL INSPECTOR AT (213) 485-1071 SHALL BE NOTIFIED THREE (3) WORKING DAYS PRIOR TO THE BEGINNING OF CONSTRUCTION. FOR WORK IN THE AUTOMATED TRAFFIC SURVEILLANCE AND CONTROL (ATSAC) PROJECT AREA, A FIELD MEETING SHALL BE SCHEDULED WITH THE ATSAC PROJECT ENGINEER AT (213) 972-8664 AND THE SIGNAL MAINTENANCE SUPERVISOR AT (213) 485-7721 THREE (3) WORKING DAYS PRIOR TO THE BEGINNING OF CONSTRUCTION. FULL RESTORATION OF THE ATSAC SYSTEM MUST OCCUR WITHIN FIVE (5) WORKING DAYS AFTER SHUT DOWN.

4. REGULAR TRAFFIC SIGNAL CONTROL SHALL BE MAINTAINED FROM 6:00 A.M. TO 9:00 A.M. AND 3:00 P.M. TO 7:00 P.M. ON WEEKDAYS, EXCEPT NATIONAL HOLIDAYS. FLASHING, DEACTIVATION AND ACTIVATION OF SIGNALS SHALL BE ACCOMPLISHED ONLY BY A LADOT TRAFFIC SIGNAL ELECTRICIAN. ALL ARRANGEMENTS TO DEACTIVATE SIGNALS SHALL BE MADE 24 HOURS IN ADVANCE BY CONTACTING THE LADOT TRAFFIC SIGNAL DEDICATED LINE AT (213) 485-9161 BEFORE 9:00 A.M. ON NON-HOLIDAY WEEKDAYS. THE LADOT PROJECT NUMBER MUST BE GIVEN AT THIS TIME. THE CONTRACTOR WILL BE CHARGED FOR ALL ELECTRICAL AND TRAFFIC CONTROL SERVICE PROVIDED BY LADOT.

5. ARRANGEMENTS FOR OBTAINING ANY MATERIALS IDENTIFIED TO BE SUPPLIED BY LADOT SHALL BE MADE TEN (10) WORKING DAYS IN ADVANCE BY CONTACTING THE LADOT FIELD OPERATIONS DIVISION AT (213) 928-9620. HOWEVER, TRAFFIC SIGNAL CONTROLLERS REQUIRE THIRTY (30) CALENDAR DAYS ADVANCE NOTICE AND MUST BE PICKED UP WITHIN FIFTEEN (15) CALENDAR DAYS AFTER NOTIFICATION. CONTACT LADOT SIGNAL SHOP AT (213) 473-8468 TO COORDINATE CONTROLLER DELIVERY AND/OR PICKUP.

6. ALL IDENTIFIED TRAFFIC SIGNAL EQUIPMENT SHALL BE RETURNED TO LADOT. ARRANGEMENTS FOR RETURNING IDENTIFIED EQUIPMENT TO LADOT SHALL BE MADE FIVE (5) WORKING DAYS IN ADVANCE BY CONTACTING THE LADOT MATERIAL CONTROL DIVISION AT (213) 928-9636.

7. ALL EXISTING TRAFFIC CONTROL SIGNING SHALL BE MAINTAINED WITH STANDARD SIGN BRACKETS BY THE CONTRACTOR. EXCEPT WHERE OTHERWISE INDICATED, EXISTING LARGE STREET NAME SIGNS ON MAST ARM TYPE STANDARDS SHALL BE RELOCATED FROM THE VERTICAL POLE TO THE MAST ARM PER LADOT STANDARD DRAWING NO. S-457.0 AND S-486.0. THE CONTRACTOR SHALL COORDINATE WITH LADOT SIGN SHOP AT (213) 485-8918 FOR ANY REQUIRED LARGE STREET NAME SIGNS. ANY TRAFFIC CONTROL SIGNING DAMAGED OR LOST BY THE CONTRACTOR SHALL BE REPLACED AT THE CONTRACTOR'S EXPENSE. SIGNAL CONTRACTOR SHALL INSTALL MAST ARM MOUNTED SIGNS.

8. THE CONTRACTOR SHALL FURNISH AND INSTALL, AS SHOWN ON THE PLANS, ALL TRAFFIC SIGNAL EQUIPMENT SUCH AS STANDARDS, MAST ARMS, SIGNAL HEADS, AND OTHER EQUIPMENT AS REQUIRED. ALL SUCH EQUIPMENT SHALL BE NEW. ALL VEHICLE HEAD EQUIPMENT SUPPLIED BY THE CONTRACTOR SHALL HAVE 1-1/2 INCH DIAMETER PIPE FIT MOUNTING HARDWARE, INCLUDING ALL TOP POST MOUNT HEADS. PED HEAD MODULE REPLACEMENTS SHOWN ON THE PLAN SHALL REQUIRE A COMPLETE INSTALLATION, INCLUDING NEW PED HEAD AND TERMINAL COMPARTMENT. LEFT TURN SIGNAL HEADS ON MAST ARMS WITH TWO OR MORE SIGNAL HEADS SHALL BE TOP MOUNTED.

DETAIL "G"
(Not to Scale)
K-71 WHITE FLEXIBLE POST
N.T.S.

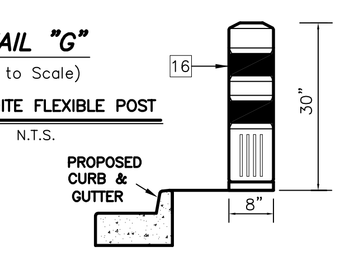

DETAIL "F"
(Not to Scale)

TS-406-ACTIVE TRANSPORTATION PROGRAM CYCLE 1
SRTS MENLO AVE. ES AND WEST VERNON AVE. ES (MV)

SUBMITTED _____ 20 ___ Transportation Engineer

APPROVED _____ 20 ___ Senior Transportation Engineer

REGISTERED PROFESSIONAL ENGINEER MAHDOCHEHR ADHAM No. 69854 CIVIL STATE OF CALIFORNIA

AS BUILT
Date of Installation:
LADOT Inspector:
Condition As Of:
LADOT Engineer:
District CENTRAL
Thomas Guide 674-B3
References
FIELD CHECK
PROJECT NO. 74248
PROJECT NO. TGF13001
GEOMETRIC PLAN: A-6258

CITY OF LOS ANGELES
DEPARTMENT OF TRANSPORTATION
SELETA J. REYNOLDS, General Manager

TITLE
42nd ST. & HOOVER ST.

File Name 10830-2015.DWG
Intersection No. 10830
Project No. TGF15019
BOE: E1907829F

NOTICE: IF PLAN HAS NOT BEEN IMPLEMENTED WITHIN TWO (2) YEARS OF THE APPROVAL DATE, IT MUST BE RESUBMITTED TO LADOT SIGNAL DESIGN SECTION FOR REVIEW AND APPROVAL.

Scale: 1" = 20'
North/South: HOOVER ST.

NO.	REVISION DESCRIPTION	DIV./DIST. ENGR.	DATE	SUPERVISOR	DESIGNER	SR. DRAFTING	DRAFTING	FIELD	BASE	BY	DATE	TIMING	DISTRICT	GEOMETRIC	ATSAC	METRO RAIL	BY	DATE
				I.D.	T.H.	–	I.W.	–	–		12-08-15							12-04-15
																		12-02-15

SCALES HORIZ. 1"= VERT. 1"= | SHEET 94 OF 109 | INDEX NUMBER

(LADOT Revised 09/07)

5. THIS PLAN ASSUMES THE COMPLETION OF LADOT BIKE LANE

FIELD MODIFICATION OF CONTROLLER IS REQUIRED TO ACCOMMODATE THE PROPOSED PHASING. CONTRACTOR TO PROVIDE AND INSTALL NEW ATSAC 2070

VERIFY WITH NEW 41ST & HOOVER