1. REPORT NO. **FHWA/CA10-0645**	2. GOVERNMENT ACCESSION NO.	3. RECIPIENT'S CATALOG NO.
4. TITLE AND SUBTITLE DEVELOPMENT AND TESTING OF A LOW-PROFILE BARRIER		5. REPORT DATE April 2012 6. PERFORMING ORGANIZATION CODE
7. AUTHOR(S) Vue Her, John Jewell, Robert Meline		8. PERFORMING ORGANIZATION REPORT NO. FHWA/CA10-0645
9. PERFORMING ORGANIZATION NAME AND ADDRESS Roadside Safety Research Group California Department of Transportation 5900 Folsom Blvd., Sacramento, CA. 95819		10. WORK UNIT NO. 11. CONTRACT OR GRANT NO. FHWA/CA10-0645
12. SPONSORING AGENCY NAME AND ADDRESS California Department of Transportation 5900 Folsom Blvd., Sacramento CA. 95819		13. TYPE OF REPORT & PERIOD COVERED FINAL 14. SPONSORING AGENCY CODE

15. SUPPLEMENTARY NOTES

This project was performed in cooperation with the US Department of Transportation, Federal Highway Administration, under the research project titled "DEVELOPMENT AND TESTING OF A LOW-PROFILE BARRIER."

16. ABSTRACT

Over the course of this project, a low-profile longitudinal barrier was developed and tested in accordance with the National Cooperative Highway Research Program (NCHRP) Report 350. The low-profile barrier consists of a 40 inch by 12 inch footing with a 6 inch curb and rectangular rail. The overall height of the barrier is 18 inches. The dimension of the rail is 8 inches by 3 inches with a thickness of 3/8 of an inch. The barrier tested was approximately 100 feet long with a total of 9 posts installed at 10 feet on-center. The barrier was constructed at the Caltrans Dynamic Test Facility in West Sacramento, California. .

Two full-scale crash tests were conducted under the NCHRP Report 350 Test Level 2. The first test, test 2-11 was conducted with a pickup truck. The second test, test 2-10 was conducted with a small car. Both tests met the NCHRP Report 350 evaluation criteria for TL-2 longitudinal barriers. The results of both tests were within the limits of Report 350 guidelines.

The low-profile barrier tested in this project is recommended for approval on California highways in areas designated as Test Level 2.

17. KEY WORDS Barriers, Crash Test, Median Barrier, Vehicle Impact Test, Low-Profile, Aesthetic, See-Through, Bridge Rail	18. DISTRIBUTION STATEMENT No Restrictions. This document is available through the National Technical Information Service, Springfield, VA 22161

19. SECURITY CLASSIF. (OF THIS REPORT) Unclassified	20. SECURITY CLASSIF. (OF THIS PAGE) Unclassified	21. NO. OF PAGES 85	22. PRICE

DEVELOPMENT AND TESTING OF A LOW-PROFILE BARRIER

STATE OF CALIFORNIA

DEPARTMENT OF TRANSPORTATION

DIVISION OF RESEARCH AND INNOVATION
OFFICE OF SAFETY INNOVATION AND COOPERATIVE RESEARCH
ROADSIDE SAFETY RESEARCH GROUP

Supervised by.....Robert Meline, P.E.

Principal Investigator..... John Jewell, P.E.

Report Prepared by ..... Vue Her, M.S., P.E.

Research Performed by.....Roadside Safety Research Group

ACCREDITED

Testing Cert # 3046.01

STATE OF CALIFORNIA

DEPARTMENT OF TRANSPORTATION

DIVISION OF RESEARCH AND INNOVATION
OFFICE OF SAFETY INNOVATION AND COOPERATIVE RESEARCH
ROADSIDE SAFETY RESEARCH GROUP

DEVELOPMENT AND TESTING OF A LOW-PROFILE BARRIER

Supervised by.....Robert Meline, P.E.

Principal Investigator..... John Jewell, P.E.

Report Prepared by ..... Vue Her, M.S., P.E.

Research Performed by.....Roadside Safety Research Group

Joseph W. Horton, P.E.
Office Chief
Office of Safety Innovation and
Cooperative Research

Robert Meline, P.E.
Branch Chief
Infrastructure Methods Advancement Branch
Roadside Safety Research Group

John Jewell, P.E.
Senior Engineer Specialist
Roadside Safety Research Group

Vue Her, M.S., P.E.
Transportation Engineer
Roadside Safety Research Group

DISCLAIMER STATEMENT

This document is disseminated in the interest of information exchange. The contents of this report reflect the views of the authors who are responsible for the facts and accuracy of the data presented herein. The contents do not necessarily reflect the official views or policies of the State of California of Federal Highway Administration. This publication does not constitute a standard, specification or regulation. This report does not constitute an endorsement by the Department of any product described herein.

For individuals with sensory disabilities, this document is available in Braille, large print, audio cassette, or compact disk. To obtain a copy of this document in one of these alternate formats, please contact: The Division of Research and Innovation, MS-83, California Department of Transportation, P.O. Box 942873, Sacramento, CA 94273-0001.

UNCERTAINTY OF MEASUREMENT STATEMENT

The Caltrans Roadside Safety Research Group (RSRG) has determined the uncertainty of measurements in the testing of roadside safety hardware as well as in standard full-scale crash testing of roadside safety features. The results contained in this report are only for the tested article(s) and not any other articles based on the same design and/or thereof. Information regarding the uncertainty of measurements for critical parameters is available upon request by the California Department of Transportation Roadside Safety Research Group.

SI CONVERSION FACTORS

Metric (SI) to English System of Measurement

To Convert From	To	Multiply By
	ACCELERATION	
m/s^2	ft/s^2	3.281
	AREA	
m^2	ft^2	10.764
	ENERGY	
Joule (J)	ft-lb_f	0.7376
	FORCE	
Newton (N)	lb_f	0.2248
	LENGTH	
m	ft	3.281
m	in	39.37
cm	in	0.3937
mm	in	0.03937
	MASS	
kg	lb_m	2.205
	PRESSURE OR STRESS	
kPa	psi	0.1450
	VELOCITY	
km/h	mph	0.6214
m/s	ft/s	3.281
km/h	ft/s	0.9113

ACKNOWLEDGEMENTS

This work was accomplished in cooperation with the United States Department of Transportation, Federal Highway administration.

Special appreciation is due to the following staff members of the Materials Engineering and Testing Services and Division of Research and Innovation for their enthusiastic and competent help on this project:

Thanks to Robert Meline, John Jewell, David Whitesel, Christopher Caldwell, Safar Ali Zalekian, Mike O'Keeffe, Rachael Kwong, Eric Jacobson, Karim Mirza, Arvern Lofton, and Larry Baumeister for test preparation, data reduction, vehicle preparation, and film processing. Thanks to Dave Bengal, Independent Camera Operator. Thanks to Martin Zanotti and Michael Said for their support in the machine shop.

ROADSIDE SAFETY RESEARCH GROUP

Bob Meline, P.E., *Branch Chief*

John Jewell, P.E., *Principal Investigator*

Vue Her, M.S., P.E., *Project Manager*

David Whitesel, P.E., *Transportation Engineer*

Christopher Caldwell, *Transportation Engineer*

Ali Zalekian, *Lab Manager*

Mike O'Keefe, *Lab Manager*

Rachael Kwong, *Audio Visual Manager*

TABLE OF CONTENTS

1. Introduction 1
1.1. Problem 1
1.2. Objective 1
1.3. Background 1
1.4. Literature Search 2
1.5. Scope 2
2. Technical Discussion 3
2.1. Barrier Design 3
2.2. Test Conditions 4
2.2.1. Test Facilities 4
2.2.2. Construction 4
2.2.3. Test Vehicles 9
2.2.4. Data Acquisition System 13
3. Crash Test Results 13
3.1. Test 701 Impact Description and Results 13
3.1.1. Barrier Damage 14
3.1.2. Vehicle Damage 16
3.2. Test 702 Impact Description and Results 20
3.2.1. Barrier Damage 20
3.2.2. Vehicle Damage 22
4. Discussion of Test Results 26
4.1. General Evaluation Methods (Test 701 and 702) 26
4.2. Structural Adequacy 26
4.3. Occupant Risk 26
4.4. Vehicle Trajectory 26
5. Conclusion 30
6. Recommendations 30
7. Implementation 30
8. Appendix 31
8.1. Test Vehicle Equipment 31

8.2. Test Vehicle Guidance System 35
8.3. Photo – Instrumentation 35
8.4. Electronic Instrumentation and Data 37
8.5. Computer Modeling Summary of the Low-Profile Barrier 52
8.5.1. Summary 52
8.5.2. Background 52
8.5.3. Discussion of Quarter 1 (April 08 – June 08) 52
8.5.4. Discussion of Quarter 2 (July 08 – September 08) 54
8.5.5. Discussion of Quarter 3 (July 08 – September 08) 57
8.5.6. Conclusion of Computer Model Simulation 59
8.6. Stringpot Results for Test 701 60
8.6.1. Stringpot Plots 60
8.6.2. Stringpot Results in English Units 61
8.6.3. Stringpot Results in ISO Units 63
8.6.4. Rotation of the footing 64
8.7. Detailed Drawings 65
9. References 71

LIST OF FIGURES

Figure 1-1. Computer Generated Barrier Design Concept 2
Figure 2-1. Low-Profile Barrier Cross-Section 3
Figure 2-2. Excavation of Existing Soil 4
Figure 2-3. Soil Compaction of Fill Soil in 4 to 6 Inch Lifts 5
Figure 2-4. Completed Soil Bed (between cones) 6
Figure 2-5. Excavation for Barrier Installation 6
Figure 2-6. Post, Plate, and Shim 7
Figure 2-7. Post Anchor Setup 7
Figure 2-8. Rails 8
Figure 2-9. Height of Low-Profile Barrier 9
Figure 2-10. Test 701 Pickup Truck (Side) 10
Figure 2-11. Test 701 Pickup Truck (Front Left) 10
Figure 2-12. Test 701 Pickup Truck (Relative to Barrier) 11
Figure 2-13. Test 702 Small Car (Side) 11
Figure 2-14. Test 702 Small Car (Front Right) 12
Figure 2-15. Test 702 Small Car (Relative to Barrier) 12
Figure 3-1. Test 701 Barrier Post Impact 14
Figure 3-2. Test 701 - Front Wheel (red) / Rear Wheel (green) 15
Figure 3-3. Test 701 Upstream View of Barrier Impact Location 15
Figure 3-4. Test 701 Front Left Damage 16
Figure 3-5. Test 701 Rear Left Damage 17
Figure 3-6. Test 701 Rear View Side Damage 17
Figure 3-7. Test 701 Floor Board Damage 18
Figure 3-8. Test 701 Data Summary Sheet 19
Figure 3-9. Test 702 Barrier Post Impact 20
Figure 3-10. Test 702 - Front Wheel (red) / Rear Wheel (green) 21
Figure 3-11. Test 702 Upstream View of Barrier Impact Location 21
Figure 3-12. Test 702 Side Damage 22
Figure 3-13. Test 702 Rear View Side Damage 23
Figure 3-14. Test 702 Front Left Wheel Damage 23
Figure 3-15. Test 702 Cab Post-Crash (no damage) 24
Figure 3-16. Test 702 Data Summary Sheet 25
Figure 8-1. Test 701 Camera Locations 35
Figure 8-2. Test 702 Camera Locations 36
Figure 8-3. Vehicle Accelerometer Sign Convention 38
Figure 8-4. Tape Switch Layout 39
Figure 8-5. Test 701 X (Longitudinal) Acceleration at C.G. Vs Time 40
Figure 8-6. Test 701 Y (Lateral) Acceleration at C.G. Vs Time 41
Figure 8-7. Test 701 Z (Vertical) Acceleration at C.G. Vs Time 42

Figure 8-8. Test 701 Roll, Pitch, and Yaw Rates Vs Time 43
Figure 8-9. Test 701 Roll, Pitch, and Yaw Angles Vs Time 44
Figure 8-10. Test 701 Vehicle Acceleration Severity Index (ASI) Vs Time 45
Figure 8-11. Test 702 X (Longitudinal) Acceleration at C.G. Vs Time 46
Figure 8-12. Test 702 Y (Lateral) Acceleration at C.G. Vs Time 47
Figure 8-13. Test 702 Z (Vertical) Acceleration at C.G. Vs Time 48
Figure 8-14. Test 702 Roll, Pitch, and Yaw Rates Vs Time 49
Figure 8-15. Test 702 Roll, Pitch, and Yaw Angles Vs Time 50
Figure 8-16. Test 702 Vehicle Acceleration Severity Index (ASI) Vs Time 51
Figure 8-17. Cross-Sections 3, 8, and 9 53
Figure 8-18. C2500 Pickup Impact on Cross-Section 9 53
Figure 8-19. Cross-Section 3 foundation with Low-Profile Barrier Installed 54
Figure 8-20. 50 Feet Long Test Section 55
Figure 8-21. Impact side and Area close to rupture 56
Figure 8-22. Maximum Permanent Lateral Displacements 57
Figure 8-23. Plastic Strains at Post 58
Figure 8-24. Plastic Strains at Mid-Span 58
Figure 8-25. Maximum Permanent Lateral Displacements 59
Figure 8-26. Rail Displacement 61
Figure 8-27. Footing Displacement 61
Figure 8-28. Caltrans Low-Profile Barrier Detail No. 1 (Tested Barrier) 66
Figure 8-29. Caltrans Low-Profile Barrier Detail No. 2 (Tested Barrier) 67
Figure 8-30. Caltrans Low-Profile Barrier Detail No. 3 (Tested Barrier) 68
Figure 8-31. Caltrans Low-Profile Barrier Detail No. 4 (Tested Barrier) 69
Figure 8-32. Caltrans Low-Profile Barrier Detail No. 5 (Tested Barrier) 70

LIST OF TABLES

Table 1-1. Test Matrix 3
Table 4-1. Test 701 Assessment Summary 27
Table 4-2. Test 702 Assessment Summary 28
Table 4-3. Vehicle Trajectories and Speeds 29
Table 8-1. Test 701 Vehicle Dimensions 33
Table 8-2. Test 702 Vehicle Dimensions 34
Table 8-3. Test 701 Camera Types and Locations 35
Table 8-4. Test 702 Camera Types and Locations 36
Table 8-5. Accelerometer Specifications 37
Table 8-6. Rail Displacements 60
Table 8-7. Footing Displacements 60

THIS PAGE IS INTENTIONALLY LEFT BLANK

1. Introduction

1.1. Problem

There has been an increasing emphasis on aesthetics in low-speed highways from the districts, local public agencies, counties, and the public. A substantial effort has been made into developing a non-proprietary, low maintenance, and permanent low-profile longitudinal barrier that is both crashworthy and aesthetically pleasing. The low-profile barrier must meet National Cooperative Highway Research Program (NCHRP) Report 350 evaluation criteria for TL-2 longitudinal barriers.

1.2. Objective

The objective of this project was to develop a non-proprietary, permanent, low-profile, narrow barrier that can be used with or without soil backing on the non-traffic side. The barrier needs to pass test level 2 under the NCHRP Report 350 guidelines. Test 2-10 of the NCHRP Report 350 requires an 820-kg vehicle to impact the barrier at a speed of 43.5 mph (70 km/h) at an angle of 20°. Test 2-11 requires a 2000-kg vehicle to impact the barrier also at 43.5 mph but at an angle of 25°. Both tests will have to be successful in order to comply with Report 350.

1.3. Background

Several districts have requested having the ability to plant trees in the medians of low-speed highways in order to improve the aesthetics of Caltrans right of way. Trees with an expected mature size greater than 4 inches are consider fixed objects and must be removed or shielded. Groups of trees or shrubs with multiple trunks near each other also pose as a hazard because they can be considered as having the effect of a single tree due to their combined cross-sectional areas. Mature trees must be a minimum of 30 feet from the traveled way to meet the criteria for no barriers, which is usually not possible in urban environments. Installing a low-profile barrier would provide better visibility than a full-size barrier, increasing aesthetics. Currently, there are no non-proprietary low-profile barriers suitable for shielding trees in the medians of low-speed highways. Hence, many municipalities are unable to place trees in context sensitive environments.

The barrier design concept is shown in Figure 1-1. The total height of the barrier is 18 inches measured from the ground with posts spaced at 10 feet apart. Regarding aesthetics, the leading request is for openings in the barrier, which would provide a less monolithic and more see-through appearance.

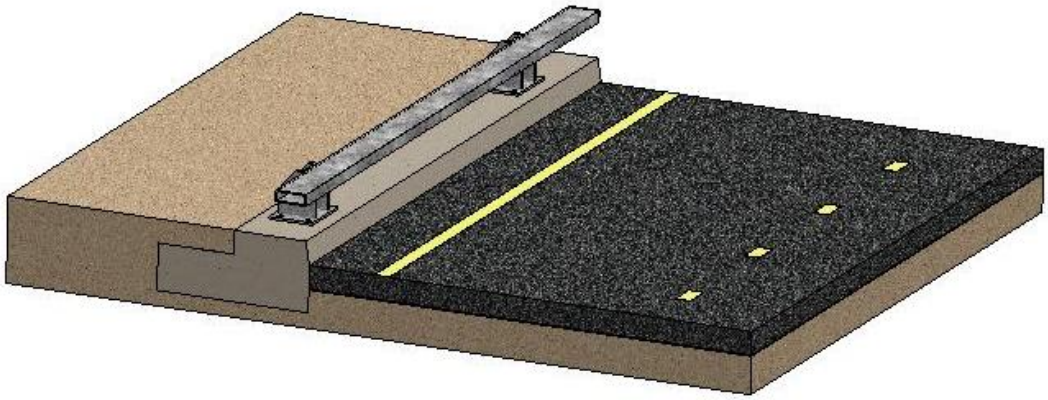

Figure 1-1. Computer Generated Barrier Design Concept

1.4. Literature Search

A literature search was conducted to find information about low-profile TL-2 barriers that would also meet the requirements. The search led to the understanding that some work has been completed on low-profile barriers. However, little work had been done to develop a barrier that addressed the issues of aesthetics and maintenance, such as a permanent see-through and low maintenance low-profile barrier.

The search for existing devices yielded three proprietary barriers that are similar to the low-profile barrier developed in this project but none of them was acceptable because they are not see-through barriers. These barriers include the Texas Transportation Institute's (TTI) 20-inch low-profile portable barrier (also not low-maintenance), the Midwest Roadside Safety 20-inch low-profile concrete bridge rail, and the Florida Department of Transportation's 18-inch TL-2 portable low-profile barrier (also not low maintenance).

1.5. Scope

Two full-scale crash tests were performed and evaluated in accordance with NCHRP Report 350. Computer modeling was used to determine the level of snagging and the critical impact point (see Appendix Section 8.5 for the computer simulation summary report). The Test matrix established for this project is shown in Table 1-1. The primary purpose of the testing was to determine if the barrier would successfully and safely redirect the test vehicles. A secondary purpose of the testing was to determine the level of maintenance required after a major impact.

Table 1-1. Test Matrix

Test Number	Barrier Type	Vehicle Mass (kg)	Nominal Speed (km/h)	Nominal Impact Angle (degrees)
701	Low-Profile Barrier	2000	70	25°
702	Low-Profile Barrier	820	70	20°

2. Technical Discussion

2.1. Barrier Design

The design criteria for the low-profile barrier are as follows:

1. *Must meet NCHRP Report 350, Test Level 2*
2. *Good Aesthetics*
3. *Good see-through characteristics for the motoring public*
4. *Low maintenance*

A cross-section of the barrier is shown in Figure 2-1.

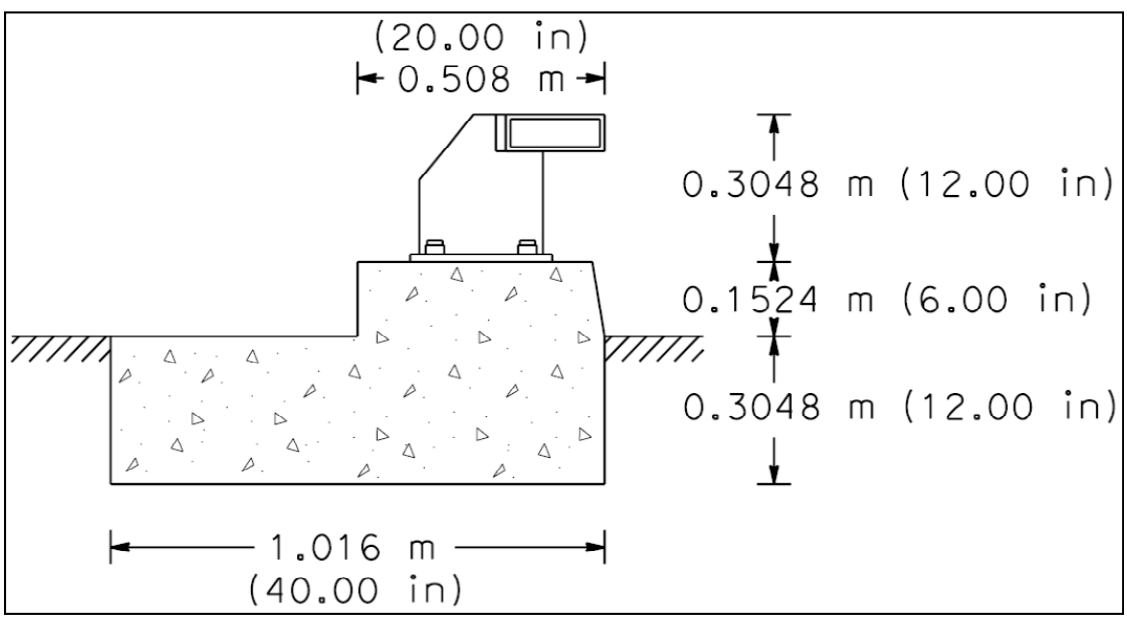

Figure 2-1. Low-Profile Barrier Cross-Section

2.2. Test Conditions

2.2.1. Test Facilities

Crash testing was conducted at the Caltrans Dynamic Test Facility in West Sacramento, California. The test area is a large, flat, asphalt concrete surface. At the time of testing, there were no obstructions nearby.

2.2.2. Construction

The low-profile barrier test article was constructed at the Caltrans Dynamic Test Facility. The test article was 30.48 m (100 feet) long with a nominal height of 0.4572 m (18 inches). It consisted of a 0.305 m (12 inch) deep foundation, a 0.105 m (6 inch) curb, with nine 0.305 m (12 inch) posts spaced at 3.048 m (10 feet) on center, and a 3x8x3/8 inch structural steel rail. In order to validate a LS-DYNA computer model, it was necessary that the low-profile barrier footing was built in a uniform soil bed to get a homogeneous soil reaction. Because existing soils were non-homogeneous due to an assortment of previous projects at the construction location, a 2.44 x 0.61 x 30.48 meter (8 x 2 x 100 feet) soil bed was excavated then backfilled with soil from a local gravel provider (Cascade Rock, Inc.). The soil analysis of the fill soil was completed by the Caltrans Geotechnical Lab and classified as fine sandy silt. At a 90% relative compaction and an optimum moisture content of 12.3%, the maximum dry density was 114.6 pcf[1].

Figure 2-2. Excavation of Existing Soil

[1] *The soil analysis of the fill soil does not fall under the scope of A2LA accreditation.*

Once the excavation was complete, the bed was filled with soil, 0.1016 to 0.1524 meters (4 to 6 inches) per lift. Each lift was moisture-conditioned and compacted using a vibratory roller.

Figure 2-3. Soil Compaction of Fill Soil in 4 to 6 Inch Lifts

Once the bed was completely filled and compacted, a nuclear gauge was used to test the compaction. The minimum relative compaction required was 90% under Caltrans 2006 Standard Specifications. A 93% relative compaction was achieved with a density of 122.4 pcf.

Figure 2-4. Completed Soil Bed (between cones)

The low-profile barrier was constructed and installed in two phases: pouring of the footing and attachment of the rail. The soil was re-excavated 1.016 x 0.3048 x 30.48 meters (3.3 x 1 x 100 feet) to install the footing of the barrier. The footing and the curb were constructed in a single pour.

Figure 2-5. Excavation for Barrier Installation

The footing was 30.48 m (100 feet) long and had 9 posts spaced 3.048 m (10 feet) on center. The rail came in 4 pieces and spanned 30.48 m (100 feet).

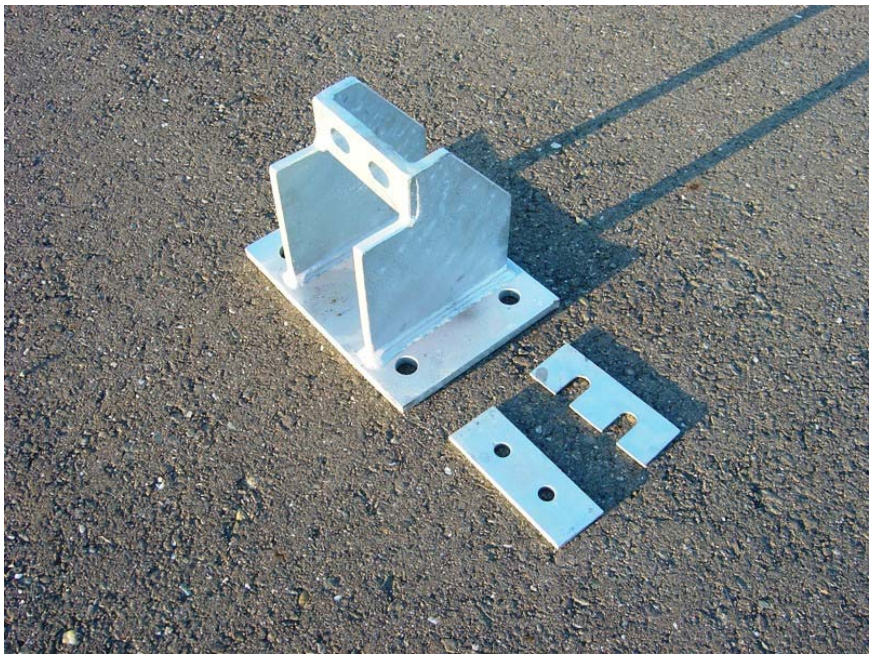

Figure 2-6. Post, Plate, and Shim

Figure 2-7. Post Anchor Setup

Once the formwork for the footing was complete, the reinforcing steel and anchor bolts were position and tied in. Concrete was then poured into the formwork while being consolidated with a concrete vibrator. All exposed steel components were galvanized from the manufacturer prior to installation. The footing was placed on December 4, 2009. The posts and rails were installed on December 15, 2009.

Figure 2-8. Rails

Because of the timing of the pour and when staff was available to test the compressive strength of the concrete, the 28-day test could not be conducted. Instead, the compressive strength was tested at 31 days and was determined to be 40.6 MPa (5890 psi)[2].

[2] *The concrete compressive strength tests do not fall under the scope of A2LA accreditation.*

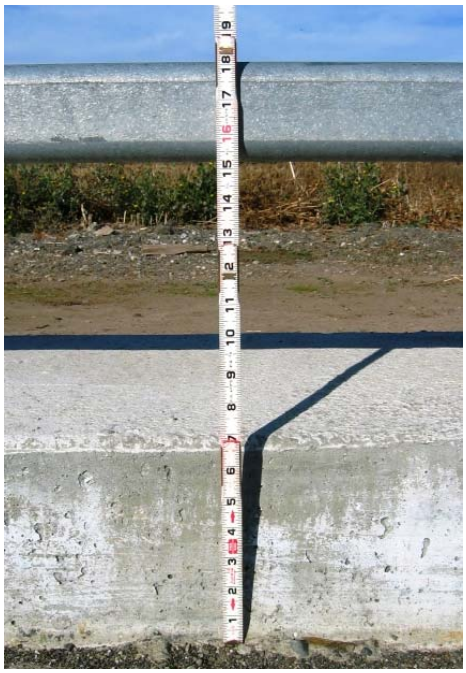

Figure 2-9. Height of Low-Profile Barrier

Because the adjacent pavement elevation varied along the length of the low-profile barrier, the as-built height of the barrier ranged from 0.4572 to 0.4826 meters (18 to 19 inches).

2.2.3. Test Vehicles

The test vehicles complied with NCHRP Report 350 requirements. The vehicles, a 1990 GMC Sierra 2500 (Test 701) and a 1995 Geo Metro (Test 702) were in good condition. Both were free of major body damage and were not missing structural parts. They both had standard equipment. The inertial mass of the truck and small car were 1960.5 kg and 832 kg, respectively. Both vehicles were within the recommended mass limits of NCHRP Report 350 for each type of vehicle. To achieve the desired impact speed, the pickup truck was self-powered while the Geo Metro was towed by another vehicle. The Geo Metro was connected to a Ford F-350 Dually using a steel cable and towed to the target impact speed. A speed-control device limited the acceleration of both vehicles once the target impact speed had been reached. The speed control device was installed in the GMC truck and on the tow vehicle for the Geo Metro. For both vehicles, steering was accomplished by means of a guidance rail anchored to the ground and a guide arm attached to the vehicle wheel hub. Remote braking was possible at any time during the test via radio control. The vehicles were released from the guidance rail a short distance before impact. Shortly before impact, the pickup truck ignition was turned off while the tow cable was released from the metro. Photos of the test vehicles are shown in Figures 2-10 to 2-15.

Figure 2-10. Test 701 Pickup Truck (Side)

Figure 2-11. Test 701 Pickup Truck (Front Left)

Figure 2-12. Test 701 Pickup Truck (Relative to Barrier)

Figure 2-13. Test 702 Small Car (Side)

Figure 2-14. Test 702 Small Car (Front Right)

Figure 2-15. Test 702 Small Car (Relative to Barrier)

2.2.4. Data Acquisition System

The test was documented through the use of still cameras, video cameras, and transient data recorders (TDRs) to record accelerations and rotational rate changes.

The impact phase of the crash test was recorded with five high-speed digital video cameras, one normal-speed DVC format video camera, and two high-quality digital cameras. The test vehicle and barrier were photographed before and after impact with the DVC format camera and a still camera. A video report of this project was assembled using edited portions of the recorded footage.

A TDR, manufactured by GMH Engineering and referred to as a Data Brick II, was used to record electronic data during the tests. The digital Data were downloaded to a personal computer and analyzed with Texas Transportation Institute's Test Risk Assessment Program (TRAP). A DaDisp workbook was used to create the necessary TRAP input files.

Two sets of orthogonal accelerometers were mounted at the center of gravity of the test vehicle. Rate gyro transducers (angular rate sensors) were also placed at the center of gravity of the test vehicle to measure the roll, pitch, and yaw rates. The data was analyzed in TRAP to determine the occupant impact velocities, ridedown accelerations, and maximum vehicle rotation.

Additional instrumentation was installed on the barrier around the proximity of the impact location to record any displacements and rotation of the barrier during the crash test. These devices were only installed on the barrier for Test 701. Information on these measurements can be found in Section 8-6 in the Appendix[3].

3. Crash Test Results

3.1. Test 701 Impact Description and Results

Test 701 was tested at NCHRP test level 2-11. The vehicle tracked smoothly into the barrier, impacting 400 mm downstream of the 5th barrier post. The front tire (red) made contact with the sleeve of the rail 530 mm downstream of the center of the post. The rear tire (green) made contact 1430 mm downstream of the post. The vehicle lost contact with the barrier at 0.412 seconds after impact. The impact speed and angle were 70.2 km/h and 25.3°, respectively. The exit speed and angle were 62.3 km/h and 7.8°, respectively. See Figure 3-8.

[3] *The stringpot and angular rate sensor analysis of the low-profile barrier does not fall under the scope of A2LA accreditation.*

3.1.1. Barrier Damage

There was minimal damage to the barrier. Stringpots and angular rate sensors were use to measure the displacements and rotations of the barrier for Test 701. The maximum permanent deflections for rail and the footing were 9.823 mm and 0.408 mm. See Section 8-6 in the Appendix for stringpot and rate gyro data. Damage to the barrier was considered cosmetic and would not have required field repairs.

Figure 3-1. Test 701 Barrier Post Impact

Figure 3-2. Test 701 - Front Wheel (red) / Rear Wheel (green)

Figure 3-3. Test 701 Upstream View of Barrier Impact Location

3.1.2. Vehicle Damage

The front left corner and wheel of the test vehicle sustained most of the damage. Additional damage also occurred to the floorboard and side of the vehicle as it scraped the barrier when redirected. The front left tire was flat and the wheel assembly came loose from the ball-joint. The front left bumper was bent in and up towards the left fender when it made contact with the barrier rail. The wheel assembly was pushed back into the wheel well, eliminating the ability to steer the vehicle after impact. See Figures 3-4 to 3-7 for pictures of the truck vehicle damage. The floorboard buckled due to the tire being pushed back in the wheel well. The maximum floorboard deformation was 45 mm, located just right of the center on the driver's floor (see Figure 3-7).

Figure 3-4. Test 701 Front Left Damage

Figure 3-5. Test 701 Rear Left Damage

Figure 3-6. Test 701 Rear View Side Damage

Figure 3-7. Test 701 Floor Board Damage

Figure 3-8. Test 701 Data Summary Sheet

Overhead Camera 1

t = 0.0 sec t = 0.10 sec t = 0.20 sec t = 0.30 sec

Overhead Camera 2

t = 0.30 sec t = 0.40 sec t = 0.50 sec t = 0.60 sec

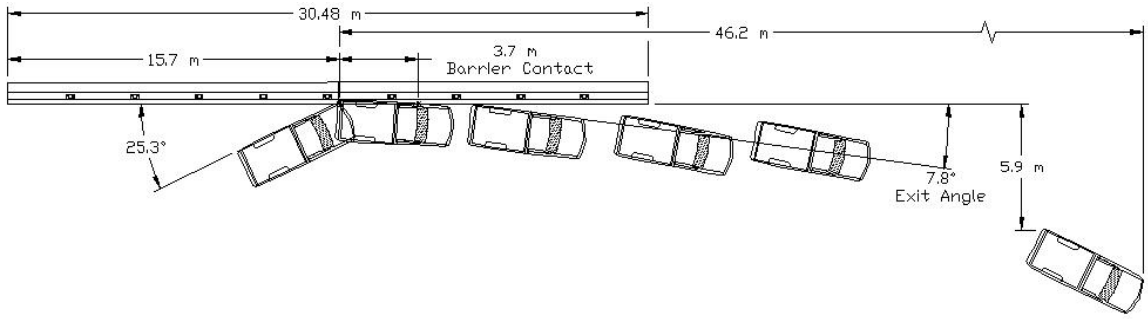

Test Barrier:
- Type: Longitudinal Barrier (Low-Profile)
- Length: 30.48 m (100 ft)

Test Date: August 12, 2010

Test Vehicle:
- Model: 1990 GMC Sierra 2500 2WD Pickup
- Inertial mass: 1960.5 kg

Test Dummy:
- Type: none used
- Weight/Position: N/A

Impact/Exit Conditions:
- Impact/Exit Velocity: 70.2 km/h / 62.3 km/h
- Impact/Exit Angle: 25.3° / 7.8°
- Impact Severity: 68.1 kJ

Test Data:
- Occ. Impact Velocity (Long/Lat): 3.6 m/s / -5.6 m/s
- Ridedown Acceleration (Long/Lat): -4.6 g / 8.7 g
- ASI: 1.01
- Exterior (VDS/CDC): FL-3, LD-1 / 10LFEW9
- Interior (OCDI): LF0002000
- Max. Roll/Pitch/Yaw Angles: -45.3° / -6.5° / 50.7°

Barrier Damage: The deflection of the rail and footing was 9.823 mm and 0.408 mm. Damage to the barrier was minimal and considered cosmetic.

3.2. Test 702 Impact Description and Results

Test 702 was performed at test level 2 (2-10). The vehicle tracked smoothly into the barrier. The front tire (red) made contact 1260 mm upstream of the 3rd barrier post. The rear tire (green) made contact 630 mm downstream of the post. The vehicle lost contact with the barrier at 0.364 seconds after impact. The impact speed and angle were 70.8 km/h and 21°, respectively. The exit speed and angle were 63.1 km/h and 9.6°. See Figure 3-16.

3.2.1. Barrier Damage

There was no discernable permanent deflection of the barrier. Damage to the barrier was considered cosmetic and would not have required field repairs.

Figure 3-9. Test 702 Barrier Post Impact

Figure 3-10. Test 702 - Front Wheel (red) / Rear Wheel (green)

Figure 3-11. Test 702 Upstream View of Barrier Impact Location

3.2.2. Vehicle Damage

The front left wheel absorbed most of the impact. The rim was bent during impact causing the tire to deflate. The wheel well of the test vehicle sustained most of the damage. Additional damage also occurred to the side of the vehicle as it scraped the barrier when redirected. The CV axle and strut broke, eliminating the ability to steer the vehicle after impact. Refer to Figures 3-12 to 3-15 for pictures of vehicle damage. Since the front left wheel took most of the impact, there was no distinguishable damage to the floorboard (see Figure 3-15).

Figure 3-12. Test 702 Side Damage

Figure 3-13. Test 702 Rear View Side Damage

Figure 3-14. Test 702 Front Left Wheel Damage

Figure 3-15. Test 702 Cab Post-Crash (no damage)

Figure 3-16. Test 702 Data Summary Sheet

Overhead Camera 1

t = 0.0 sec t = 0.10 sec t = 0.20 sec t = 0.30 sec

Overhead Camera 2

t = 0.40 sec t = 0.50 sec t = 0.60 sec t = 0.70 sec

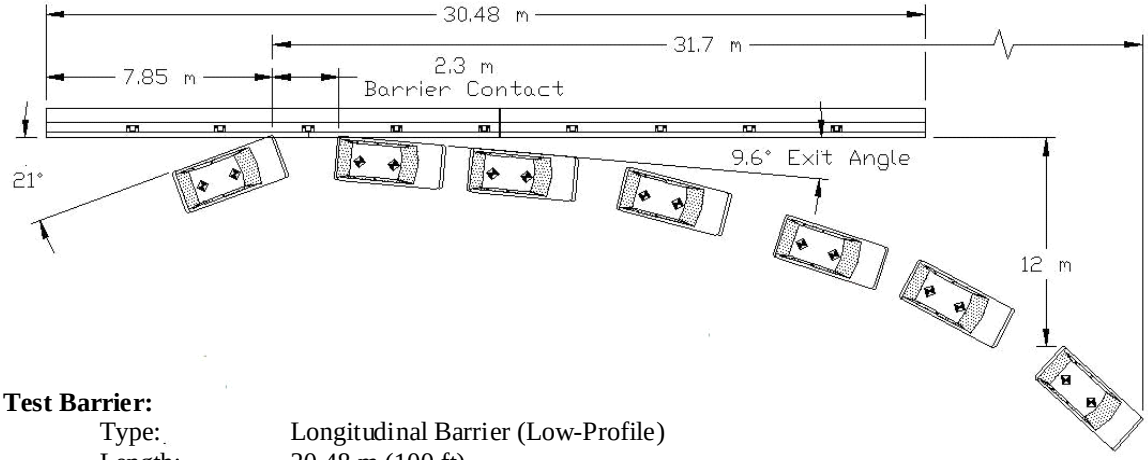

Test Barrier:
- Type: Longitudinal Barrier (Low-Profile)
- Length: 30.48 m (100 ft)

Test Date: June 8, 2011

Test Vehicle:
- Model: 1995 Geo Metro
- Inertial mass: 832 kg

Test Dummy:
- Type: Hybrid III
- Weight/Position: 75 kg/ Front Left (lap& shoulder belt)

Impact/Exit Conditions:
- Impact/Exit Velocity: 70.8 km/h / 63.1 km/h
- Impact/Exit Angle: 21.0° / 9.6°
- Impact Severity: 20.7 kJ

Test Data:
- Occ. Impact Velocity (Long/Lat): 3.1 m/s / -6.6 m/s
- Ridedown Acceleration (Long/Lat): -2.8 g / 8.0 g
- ASI: 1.60
- Exterior (VDS/CDC): FL-1, LFQ-2, LD-1 / 10LFEW9
- Interior (OCDI): LF0000000
- Max. Roll/Pitch/Yaw Angles: -18.7° / -11.6° / 67.6°

Barrier Damage: There was no discernable permanent deflection of the footing or rail.

4. Discussion of Test Results

4.1. General Evaluation Methods (Test 701 and 702)

NHCRP Report 350 recommends that crash test performance be assessed according to three evaluation factors: 1) Structural Adequacy, 2) Occupant Risk, and 3) Vehicle Trajectory.

The structural adequacy, occupant risk, and vehicle trajectory associated with the low-profile barrier testing were evaluated using the evaluation criteria found in Tables 3.1 and 5.1 of NCHRP Report 350.

4.2. Structural Adequacy

The structural adequacy of the low-profile barrier is acceptable. There were minor amounts of scraping and spalling on the curb, which would have not rendered the barrier ineffective nor would it have required immediate repair.

Refer to Tables 4-1 to 4-2 for the assessment summary of the structural adequacy for the low-profile barrier.

4.3. Occupant Risk

The occupant risk for both tests were acceptable. The floorboard deformation for Test 701 was 45 mm (less than 150 mm) and too small to measure for Test 702. The occupant compartments for both tests were not compromised. The yaw, pitch, and roll of the vehicle were within acceptable limits.

Refer to Tables 4-1 to 4-2 for the assessment summary of the occupant risk for the low-profile barrier.

4.4. Vehicle Trajectory

The vehicle trajectories were acceptable. After impact, both vehicles tracked in a curved line although the trajectory brought it back into traffic. The exit angle and rate of return into traffic were minimal. The longitudinal occupant velocity and ridedown acceleration were each well below the maximums allowed.

Refer to Tables 4-1 to 4-2 for the assessment summary of the vehicle trajectory for the low-profile barrier.

Table 4-1. Test 701 Assessment Summary

Test No. 701
Date August 12, 2010
Test Agency California Department of Transportation

Evaluation Criteria	Test Results	Assessment
Structural Adequacy		
A. Test article should contain and redirect the vehicle; the vehicle should not penetrate, underride, or override the installation although controlled lateral deflection of the test article is acceptable.	The vehicle was contained and smoothly redirected.	PASS
Occupant Risk		
D. Detached elements, fragments or other debris from the test article should not penetrate or show potential for penetrating the occupant compartment, or present an undue hazard to the other traffic, pedestrians, or personnel in a work zone. Deformations of, or intrusions into, the occupant compartment that could cause serious injuries should not be permitted.	There was minimal damage to the barrier. There was no significant debris from the vehicle. The maximum floorboard deformation was 45 mm (less than 150 mm).	PASS
F. The vehicle should remain upright during and after collision although moderate roll, pitching and yawing are acceptable.	The observed levels of roll, pitch, and yaw were deemed acceptable.	PASS
Vehicle Trajectory		
K. After collision it is preferable that the vehicle's trajectory not intrude into adjacent traffic lanes.	The vehicle maintained a relatively straight course after exiting the barrier.	PASS
L. The occupant impact velocity in the longitudinal direction should not exceed 12m/sec and the occupant ridedown acceleration in the longitudinal direction should not exceed 20 G's.	Long. Occ. Impact Vel. = 3.6 m/s Long. Occ. Ridedown = -4.6 g	PASS
M. The exit angle from the test article preferably should be less than 60% of test impact angle, measured at time of vehicle loss of contact with test device.	Exit angle = 7.8°, 31% of the impact angle	PASS

Table 4-2. Test 702 Assessment Summary

Test No. 702
Date June 8, 2011
Test Agency California Department of Transportation

Evaluation Criteria	Test Results	Assessment
Structural Adequacy		
A. Test article should contain and redirect the vehicle; the vehicle should not penetrate, underride, or override the installation although controlled lateral deflection of the test article is acceptable.	The vehicle was contained and smoothly redirected.	PASS
Occupant Risk		
D. Detached elements, fragments or other debris from the test article should not penetrate or show potential for penetrating the occupant compartment, or present an undue hazard to the other traffic, pedestrians, or personnel in a work zone. Deformations of, or intrusions into, the occupant compartment that could cause serious injuries should not be permitted.	There was minimal damage to the barrier. There was no significant debris from the vehicle. The amount of floorboard deformation was too small to measure.	PASS
F. The vehicle should remain upright during and after collision although moderate roll, pitching and yawing are acceptable.	The observed levels of roll, pitch, and yaw were deemed acceptable.	PASS
H. Occupant Impact Velocities (OIV) in both longitudinal and lateral directions should be less than the following: 9 m/s (preferred) or 12 m/s (maximum).	Long. OIV = 3.1 m/s Lateral OIV = -6.6 m/s	PASS
I. Occupant ridedown accelerations in both the longitudinal and lateral directions should be less than the following: 15 g's (preferred) or 20 g's (maximum).	Long. Ridedown Accel. = -2.8 g Lateral Ridedown Accel. = 8.0 g	PASS
Vehicle Trajectory		
K. After collision it is preferable that the vehicle's trajectory not intrude into adjacent traffic lanes.	The vehicle maintained a relatively straight course after exiting the barrier	PASS
M. The exit angle from the test article preferably should be less than 60% of test impact angle, measured at time of vehicle loss of contact with test device.	Exit angle = 9.6°, 46% of the impact angle	PASS

Table 4-3. Vehicle Trajectories and Speeds

Test Number	Impact Angle (deg)	60% of Intended Impact Angle (deg)	Exit Angle (deg)	Impact Speed, V_i (km/h)	Exit Speed, V_e (km/h)	Speed Change, $V_i - V_e$ (km/hr)
701	25.3°	15.18°	7.8°	70.2	62.3	7.9
702	21.0°	12.6°	9.6°	70.8	63.1	7.7

5. Conclusion

Physical crash testing of the low-profile barrier does not validate the computer simulation. The permanent deformation in the computer simulation is much greater than that of the physical crash test. This is likely due to the difficulty of building the soil model since the parameters are extremely complex.

Based on the physical crash testing involved in this project, the following conclusions can be drawn:

1. The low-profile barrier can successfully redirect a 2000-kg pickup truck impacting at 70 km/h and 25°.
2. The low-profile barrier can successfully redirect an 820-kg small car impacting at 70 km/h and 20°.
3. Damage to the low-profile barrier was cosmetic and would not have required immediate repair, if any.
4. The California Low-Profile Barrier meets the criteria set in the National Cooperative Highway Research Program's Report 350 "Recommended Procedures for the Safety Performance Evaluation of Highway Safety Features" as a Test Level 2 longitudinal barrier.

6. Recommendations

1. The low-profile barrier footing was overdesigned. It is recommended that the low-profile barrier footing reinforcing steel configuration be redesigned to reduce the amount of rebar in order to reduce cost and installation time.
2. It is recommended that pavement overlays not be allowed unless enough surface grinding is done to offset the overlay thickness.

7. Implementation

The California Department of Transportation's Division of Traffic Ops, Office of Engineering, and/or Landscape Architect will be responsible for the preparation of Standard Plans (if required) and specifications for the low-profile barrier, with technical support from the Division of Research and Innovation.

8. Appendix

8.1. Test Vehicle Equipment

The test vehicles were modified as follows for the crash tests:

TEST 701 - 1990 GMC Sierra 2500 2WD Pickup **:** The gas tank was disconnected from the fuel supply line and drained. A 12L safety gas tank was install in the truck bed and connected to the fuel supply line. The stock fuel tank had gaseous CO_2 added in order to purge the gas vapors and eliminate oxygen.

TEST 702 - 1995 Geo Metro: The gas tank was not disconnected from the fuel supply line but was completely drained. The safety gas tank was not installed in this vehicle since it was towed, not self-powered. The stock fuel tank had gaseous CO_2 added in order to purge the gas vapors and eliminate oxygen.

One pair of 12-volt wet cell motorcycle storage batteries was mounted in each vehicle. The batteries powered the GMH Engineering DataBrick transient data recorders. A 12-volt deep-cycle gel cell battery operated the Electronic Control Box.

A 4800 kPa CO_2 system, actuated by a solenoid valve, controlled remote braking after the impact and emergency braking if necessary. Part of this system was a pneumatic ram which was attached to the brake pedal. The operating pressure for the ram was adjusted through a pressure regulator during a series of trial runs prior to the actual test. Adjustments were made to ensure the shortest stopping distance without locking up the wheels. When activated, the brakes could be applied in less than 100 milliseconds.

The remote brakes were controlled via a radio link transmitter. When the brakes were applied by remote control, the ignition was automatically rendered inoperable by removing power to the coil.

For test 701, an accelerator switch was located on the rear fender of the vehicle. The switch opened an electronic solenoid that released compressed CO_2 from a reservoir into a pneumatic ram that had been attached to the accelerator pedal. The CO_2 pressure for the accelerator ram was regulated to the same pressure of the remote braking system with a valve to adjust CO_2 flow rate. A speed control device was connected in-line with the ignition module signal to the coil. It was used to regulate the speed of the test vehicle based on the signal from the vehicle transmission speed sensor. This device was calibrated prior to the test by conducting a series of trial runs through a speed trap comprised of two tape switches (set at a specific distance apart) and a digital timer. A microswitch was mounted below the front bumper and connected to the ignition system. A trip plate on the ground near the impact point triggered the switch when the truck passed over it removing power from the engine coil.

For test 702, the vehicle speed was regulated by the speed of a tow vehicle. The tow vehicle pulled a tow cable through a series of sheaves arranged to produce a 1:1 mechanical advantage. Vehicle speed control was attained through the use of the same speed control unit used in Test 701 but installed on the tow vehicle.

Table 8-1. Test 701 Vehicle Dimensions

DATE: 1/4/2010 **TEST NO.:** 701 **VIN:** 1GTFC24K8LE523539 **MAKE:** GMC

MODEL: SIERRA **YEAR:** 1990 **ODOMETER:** 248,067 miles **TIRE SIZE:** LT225/75R16

TIRE INFLATION PRESSURE (psig): LF: 40 RF: 40 LR: 65 RR: 65

MASS DISTRIBUTION (kg): LF: 550.0 RF: 539.5 LR: 430.9 RR: 438.3

DESCRIBE ANY DAMAGE TO THE VEHICLE PRIOR TO TEST: NONE

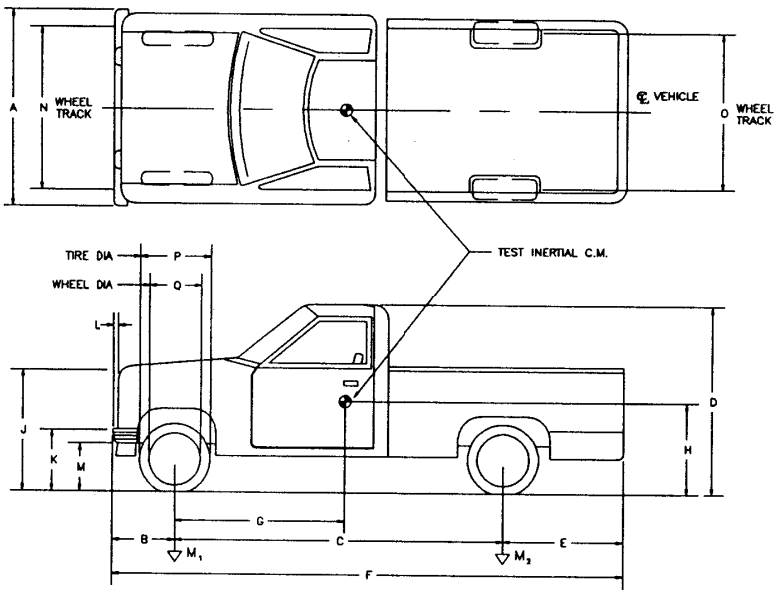

ENGINE TYPE: V8

ENGINE CID: 5.7L

TRANSMISSION TYPE:

X AUTO

MANUAL

OPTIONAL EQUIPMENT:

N/A

DUMMY DATA

TYPE: N/A

MASS: N/A

SEAT POSITION: N/A

GEOMETRY (mm)

A: 1870 D: 1775 G: 1485 K: 633 N: 1560 Q: 445

B: 900 E: 1350 H[4]: 692 L: 90 O: 1620

C: 3350 F: 5600 J: 1013 M: 413 P: 740

MASS (kg)	**CURB**	**TEST INERTIAL**	**GROSS STATIC**
M1	1108.43	1089.5	1089.5
M2	822.16	869.2	869.2
M3	1930.59	1960.5	1960.5

[4] *The actual height of the center of mass was not measured. The reported number refers to the measured height of the accelerometers and angular sensors, as mounted.*

Table 8-2. Test 702 Vehicle Dimensions

DATE: 5/18/2011 **TEST NO.:** 702 **VIN:** 2C1MR2262S6746560 **MAKE:** GEO

MODEL: METRO **YEAR:** 1995 **ODOMETER:** 182,000 miles **TIRE SIZE:** P175/70R13

TIRE INFLATION PRESSURE (psig): LF: 32 RF: 32 LR: 32 RR: 32

MASS DISTRIBUTION (kg): LF: 239.3 RF: 256.3 LR: 170.4 RR: 166.2

DESCRIBE ANY DAMAGE TO THE VEHICLE PRIOR TO TEST: NONE

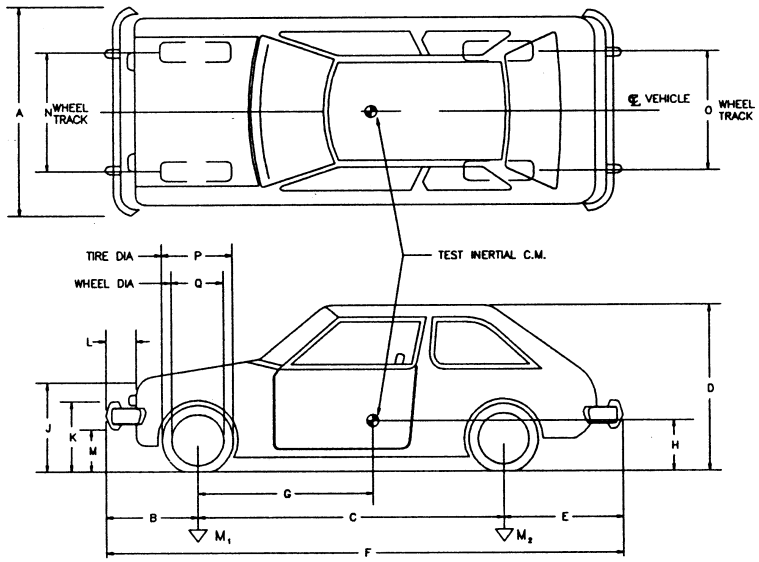

ENGINE TYPE: INLINE 4

ENGINE CID: 1.0 L

TRANSMISSION TYPE:

____AUTO

__X__MANUAL

OPTIONAL EQUIPMENT:

N/A

DUMMY DATA

TYPE: HYBRID III

MASS: 75 kg

SEAT POSITION: RIGHT FRONT

GEOMETRY (mm)

A: 1548 D: 1415 G: 923 K: 553 N: 1380 Q: 364

B: 795 E: 605 H[5]: 393 L: 117 O: 1350

C: 2374 F: 3774 J: 592 M: 245 P: 550

MASS (kg)	**CURB**	**TEST INERTIAL**	**GROSS STATIC**
M1	482.7	495.6	540.6
M2	309.1	336.6	366.6
M3	791.7	832.1	907.1

[5] *The actual height of the center of mass was not measured. The reported number refers to the measured height of the accelerometers and angular sensors, as mounted.*

8.2. Test Vehicle Guidance System

A rail guidance system directed the vehicle into the barrier. The guidance rail, anchored at 3.8 m intervals along its length was use to guide a mechanical arm, which was attached to the front right wheel of each of the vehicles. A plate and lever were used to trigger the release pin on the guidance arm, thereby releasing the vehicle from the guidance system before impact.

8.3. Photo – Instrumentation

Several high-speed video cameras recorded the impact during the tests. The high-speed video frame rates were set to 500 frames per second. The types of cameras and their locations are shown in Figures 8-1 to 8-2 and Tables 8-3 to 8-4. The origin of the coordinates is at the intended point of impact.

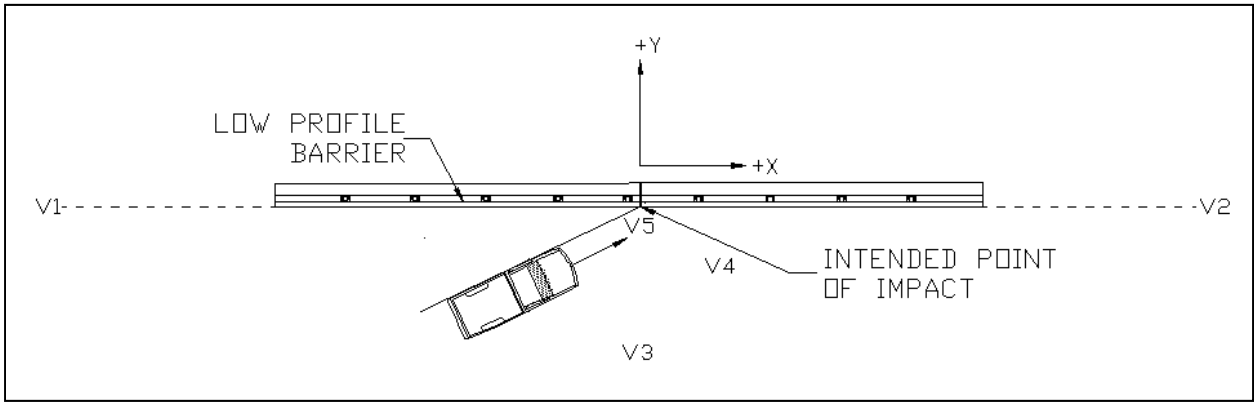

Figure 8-1. Test 701 Camera Locations

Table 8-3. Test 701 Camera Types and Locations

Camera Location	Camera Make/Model	Coordinates (m)		
		x	y	z
V1	Phantom V5.2	-31.01	-0.008	0.871
V2[6]	Phantom V5.2	87.655	0.412	1.29
V3	Phantom V5.2	2.483	18.717	1.221
V4	Phantom V10	9.144	-3.877	14.815
V5	Phantom V10	-0.26	-0.263	8.954

[6] *The highspeed camera located at V2 for Test 701 lost power during the test. Although the video was lost, no information was required from that camera for any data reduction.*

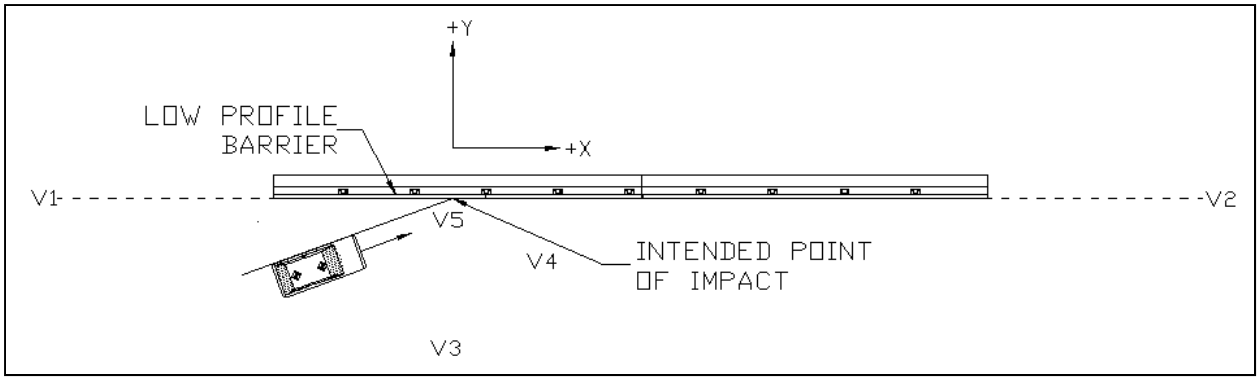

Figure 8-2. Test 702 Camera Locations

Table 8-4. Test 702 Camera Types and Locations

Camera Location	Camera Make/Model	Coordinates (m)		
		x	y	z
V1	Phantom V10	-33.438	0.305	0.686
V2	Phantom V10	82.968	-0.416	1.397
V3	Phantom V10	2.884	-18.402	1.062
V4	Phantom V10	13.583	-3.975	16.053
V5	Phantom V10	-0.06	-0.08	9.053

The following are the pretest procedures that were required to enable video data reduction to be performed using the video analysis software Vision Fusion:

1. Butterfly targets were attached to the top and sides of the test vehicle. The targets were located on the vehicle at intervals of 500 mm and 1000 mm. The targets established scale factors.
2. Flashbulbs, mounted on the test vehicle, were electronically triggered to establish initial vehicle-to-barrier contact and the time of the application of the vehicle brakes.
3. High-speed digital video cameras were all time-coded through the use of a portable computer and were triggered as the test vehicle passed over a tape switch located on the vehicle path upstream of impact.

8.4. Electronic Instrumentation and Data

Transducer data were recorded on two separate GMH Engineering, Data Brick, Model II, digital transient data recorders (TDRs) that were mounted on the test vehicles. These transducers included two sets of accelerometers and one set of angular rate sensors at the center of gravity. The TDR data were reduced using a desktop personal computer running DaDisp 2002 version 6.0 NI NK B18 (pre-processing) and TRAP version 2.3.2 (post-processing). Accelerometer specifications are shown in Table 8-5. The vehicle accelerometer sign convention used throughout this report is the same as described in NCHRP Report 350 and is show in Figure 8-3.

Table 8-5. Accelerometer Specifications

Type	Manufacturer	Model	Serial Number	Location	Range	Orientation	Test No.
Accelerometer	Endevco	2262CA-100	NW70	Vehicle's CG	100 G	Longitudinal (Primary)	701
Accelerometer	Endevco	2262CA-100	KK26	Vehicle's CG	100 G	Lateral (Primary)	701
Accelerometer	Endevco	2262CA-100	JL81	Vehicle's CG	100 G	Vertical (Primary)	701
Accelerometer	Endevco	2262CA-100	KL26	Vehicle's CG	100 G	Longitudinal (Secondary)	701
Accelerometer	Endevco	2262CA-100	NZ37	Vehicle's CG	100 G	Lateral (Secondary)	701
Accelerometer	Endevco	2262CA-100	PA86	Vehicle's CG	100 G	Vertical (Secondary)	701
Accelerometer	Endevco	7264-200	J16359	Vehicle's CG	200 G	Longitudinal (Primary)	702
Accelerometer	Endevco	7264-200	J16361	Vehicle's CG	200 G	Lateral (Primary)	702
Accelerometer	Endevco	7264-200	J16362	Vehicle's CG	200 G	Vertical (Primary)	702
Accelerometer	Endevco	2262CA-100	NW70	Vehicle's CG	100 G	Longitudinal (Secondary)	702
Accelerometer	Endevco	2262CA-100	NZ37	Vehicle's CG	100 G	Lateral (Secondary)	702
Accelerometer	Endevco	2262CA-100	PA86	Vehicle's CG	100 G	Vertical (Secondary)	702
GyroChip II (Rate Gyro)	BEI Systron Donner Inertial	QRS14	n/a	191 mm (7.5-in) behind the CG (along the X-Axis)	500 deg/s	Roll	701
GyroChip II (Rate Gyro)	BEI Systron Donner Inertial	QRS14	n/a	191 mm (7.5-in) behind the CG (along the X-Axis)	500 deg/s	Pitch	701
GyroChip II (Rate Gyro)	BEI Systron Donner Inertial	QRS14	n/a	191 mm (7.5-in) behind the CG (along the X-Axis)	500 deg/s	Yaw	701
Angular Rate Sensor	DTS, Inc.	ARS-1500	3395	Vehicle's CG	1500 deg/s	Roll	702
Angular Rate Sensor	DTS, Inc.	ARS-1500	3348	Vehicle's CG	1500 deg/s	Pitch	702
Angular Rate Sensor	DTS, Inc.	ARS-1500	3336	Vehicle's CG	1500 deg/s	Yaw	702

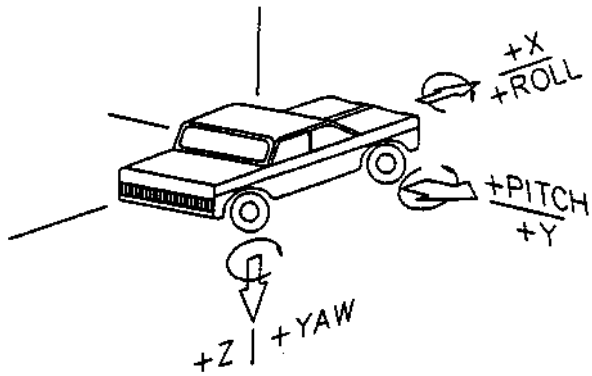

Figure 8-3. Vehicle Accelerometer Sign Convention

A rigid stand with three retro-reflective 90° polarizing tape strips was placed on the ground near the test article and alongside the path of the test vehicle. The strips were spaced at carefully measured intervals of 1000 mm. The test vehicle had an onboard optical sensor that produced sequential impulses or "event blips" as the vehicle passed the reflective tape strips. The event blips were recorded concurrently with the accelerometer signals on the TDR, serving as "event markers". The impact velocity of the vehicle could be determined from these sensor impulses, the data record time, and the known distance between the tape strips. A pressure sensitive tape switch on the front bumper of the vehicle closed at the instant of impact and triggered two events: 1) "event marker" was added to the recorded data, and 2) a flashbulb mounted on the top of the vehicle was activated. Two sets of pressure activated tape switches, connected to a speed trap, were placed 4 m apart just upstream of the test article specifically to establish the impact speed of the test vehicle. The layout for all of the pressure sensitive tape switches and reflective tape is shown in Figure 8-4.

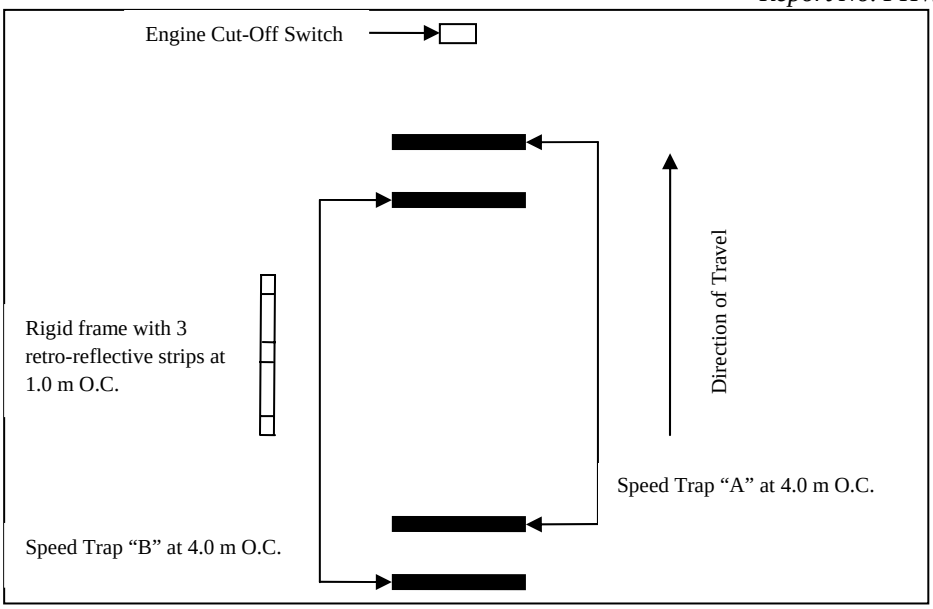

Figure 8-4. Tape Switch Layout

The data curves are shown in Figure 8-5 through 8-16 include the accelerometer and angular rate sensor records from the test vehicles. They also show the velocity and displacement curves for the longitudinal and lateral components. These plots are required to calculate the occupant impact velocity defined in NCHRP Report 350. All data were analyzed using TRAP.

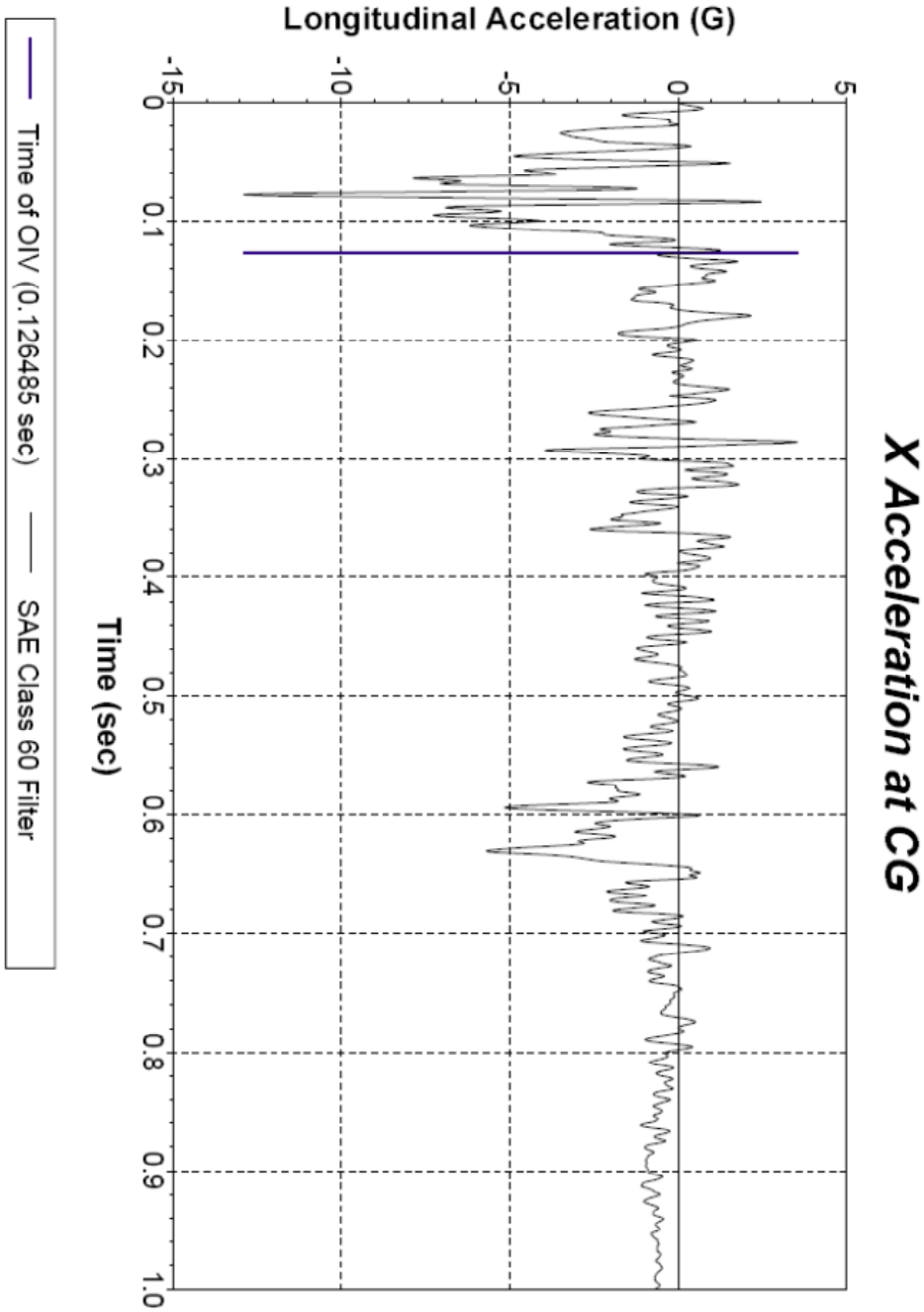

Figure 8-5. Test 701 X (Longitudinal) Acceleration at C.G. Vs Time

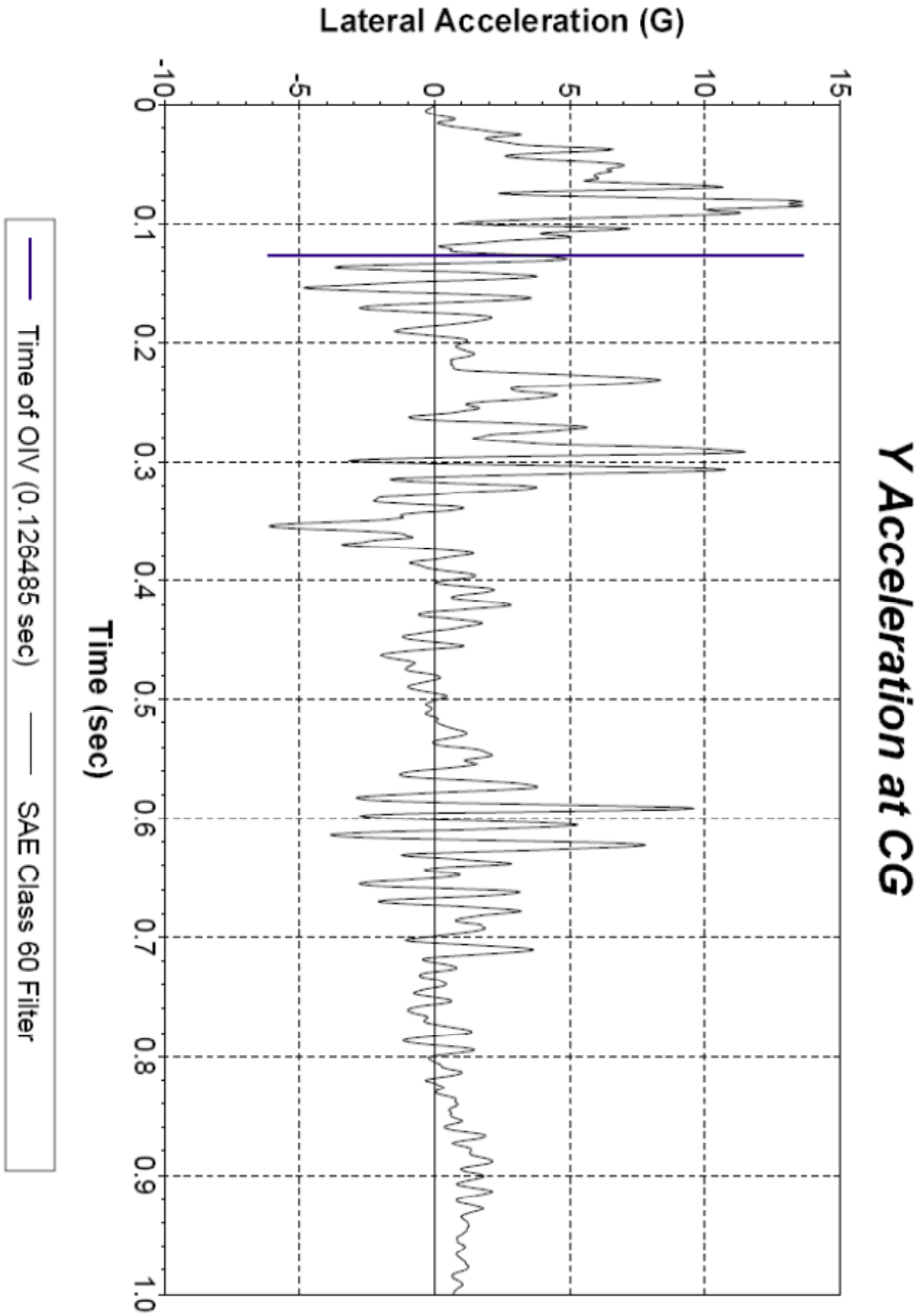

Figure 8-6. Test 701 Y (Lateral) Acceleration at C.G. Vs Time

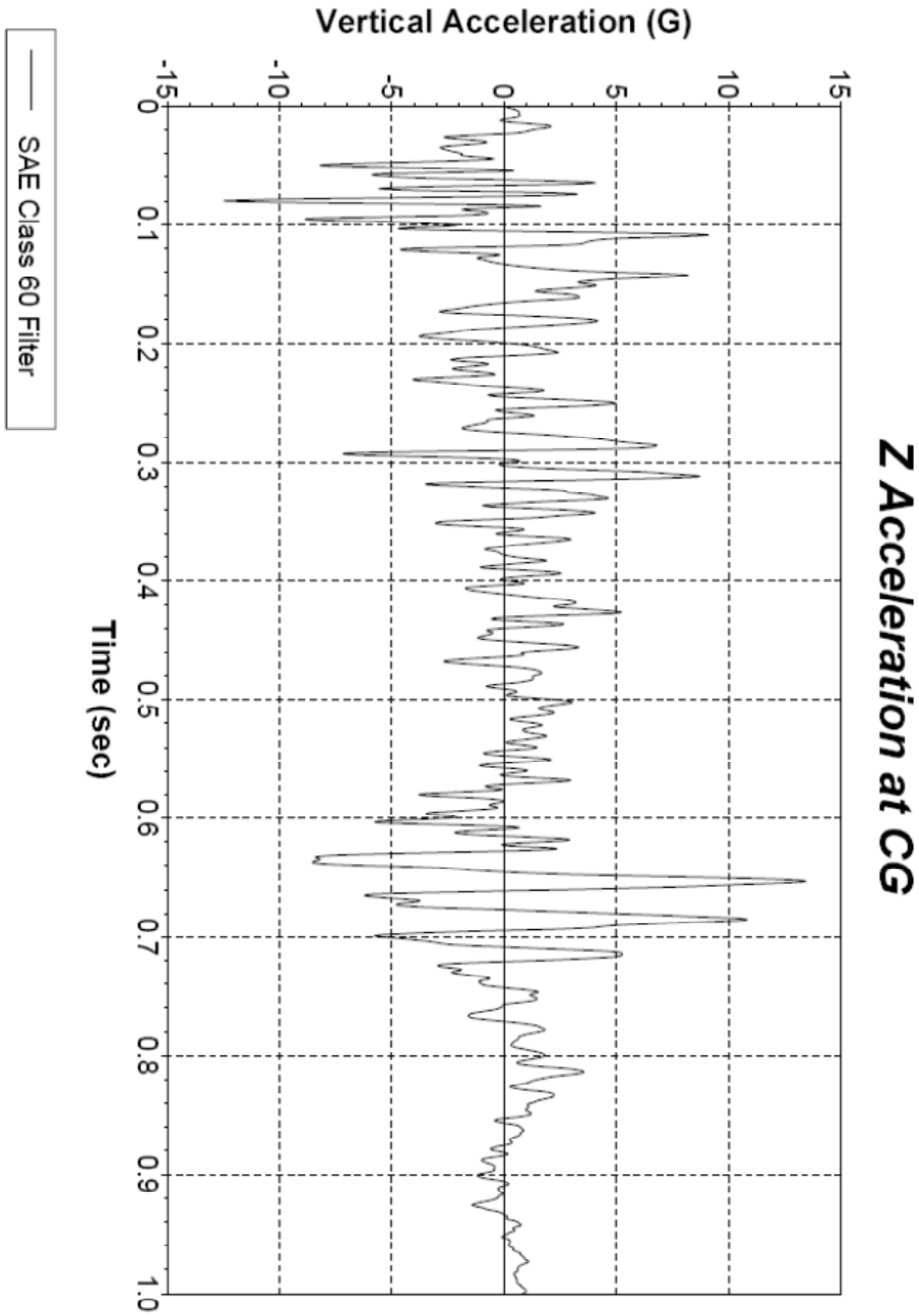

Figure 8-7. Test 701 Z (Vertical) Acceleration at C.G. Vs Time

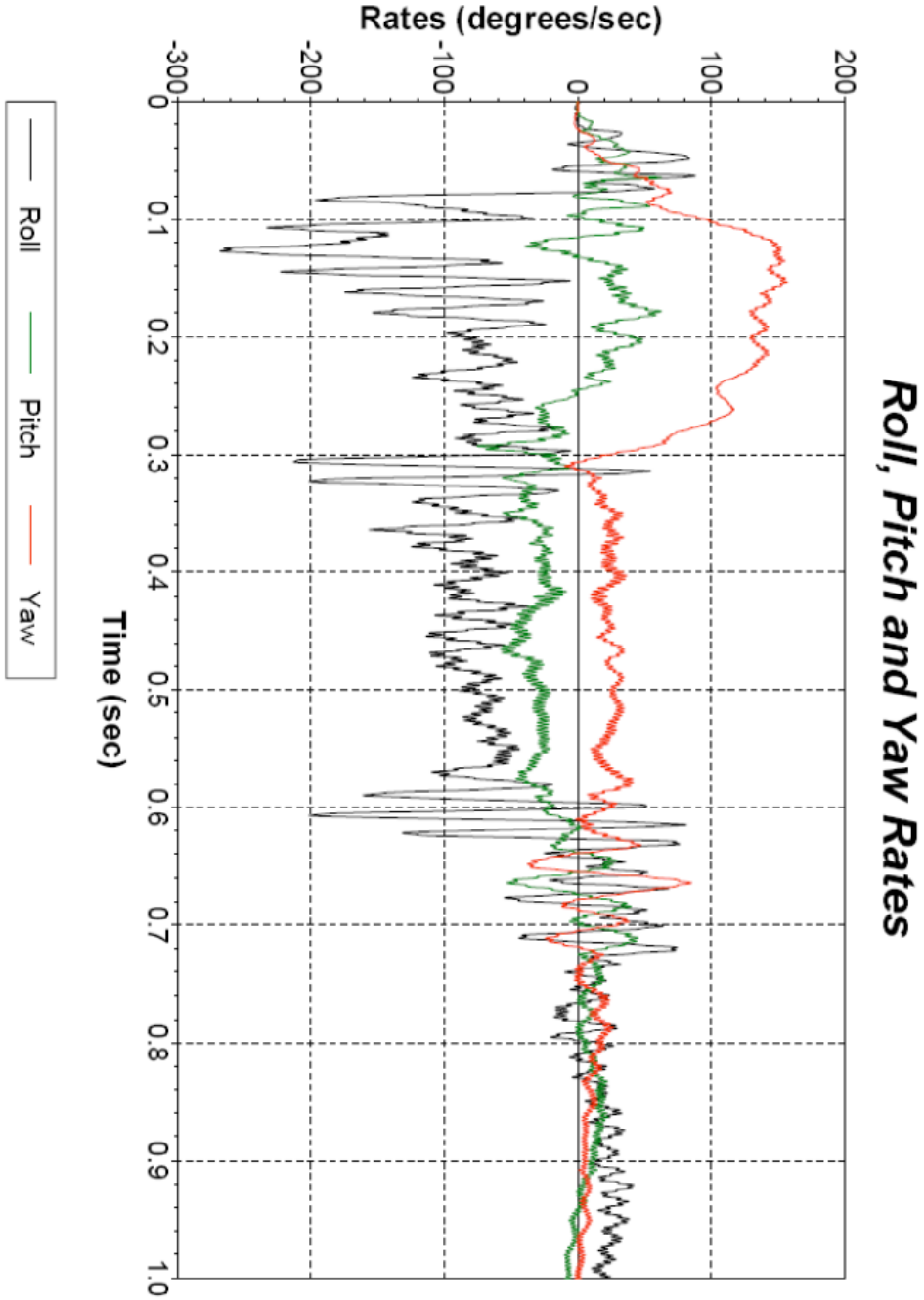

Figure 8-8. Test 701 Roll, Pitch, and Yaw Rates Vs Time

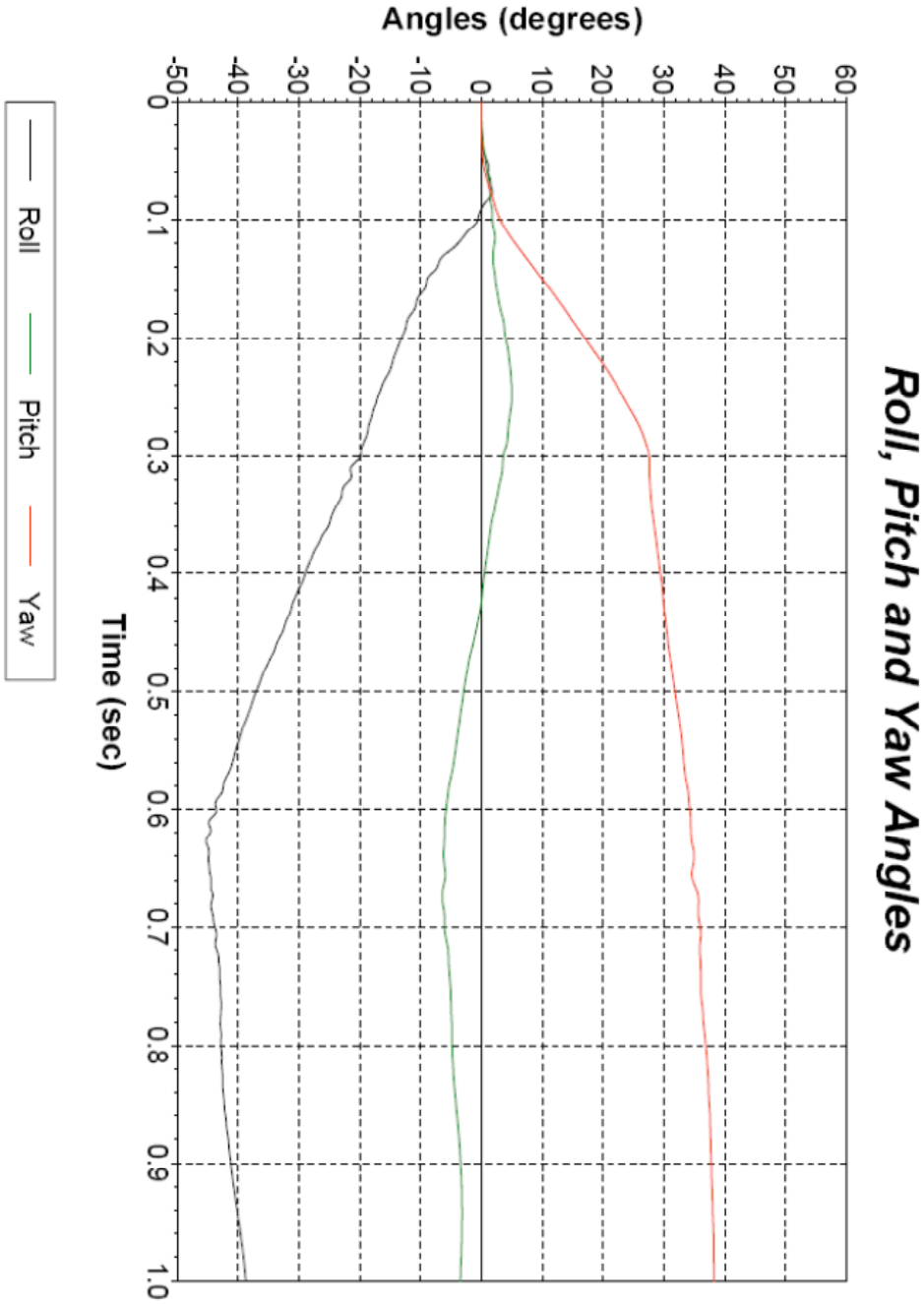

Figure 8-9. Test 701 Roll, Pitch, and Yaw Angles Vs Time

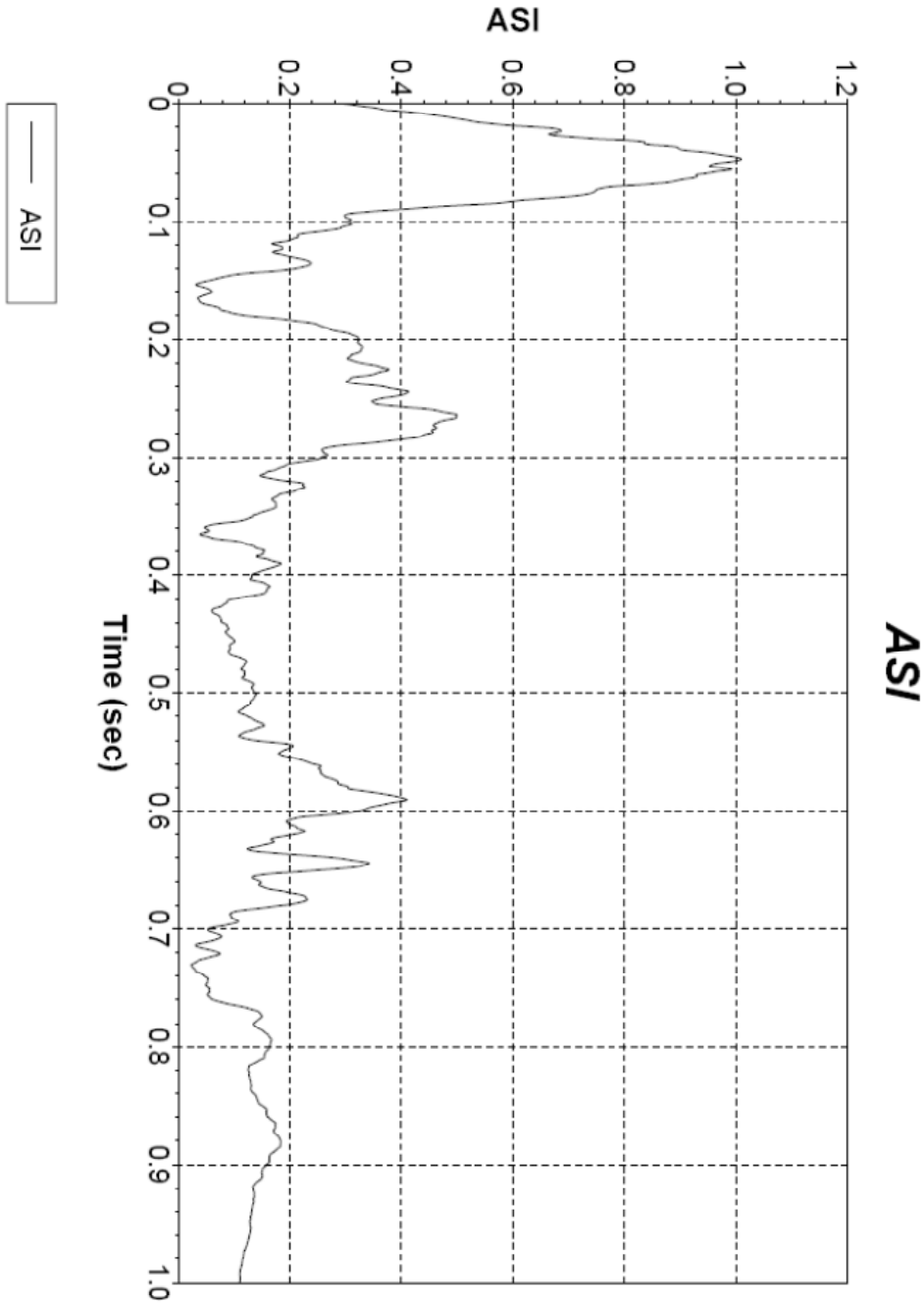

Figure 8-10. Test 701 Vehicle Acceleration Severity Index (ASI) Vs Time

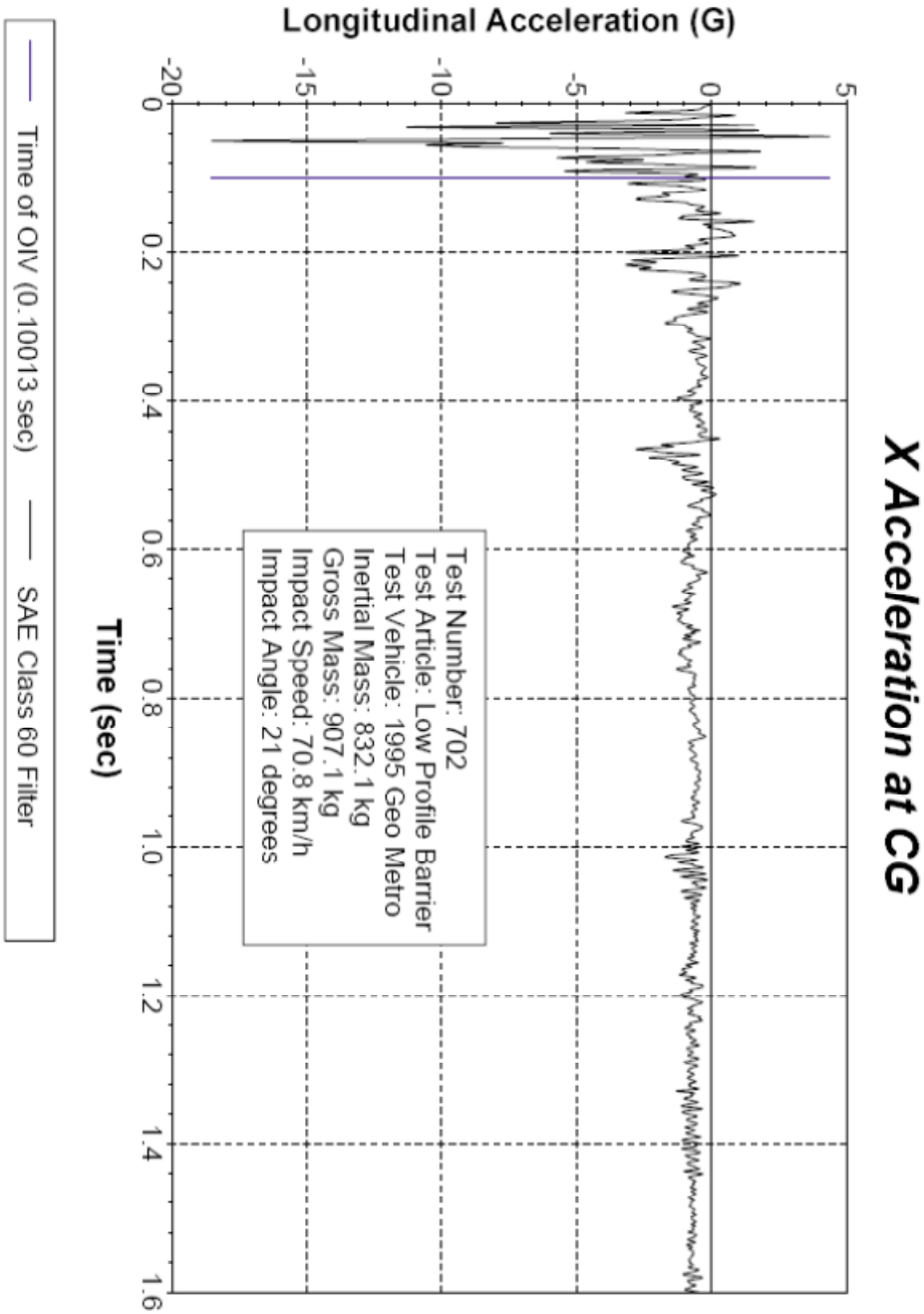

Figure 8-11. Test 702 X (Longitudinal) Acceleration at C.G. Vs Time

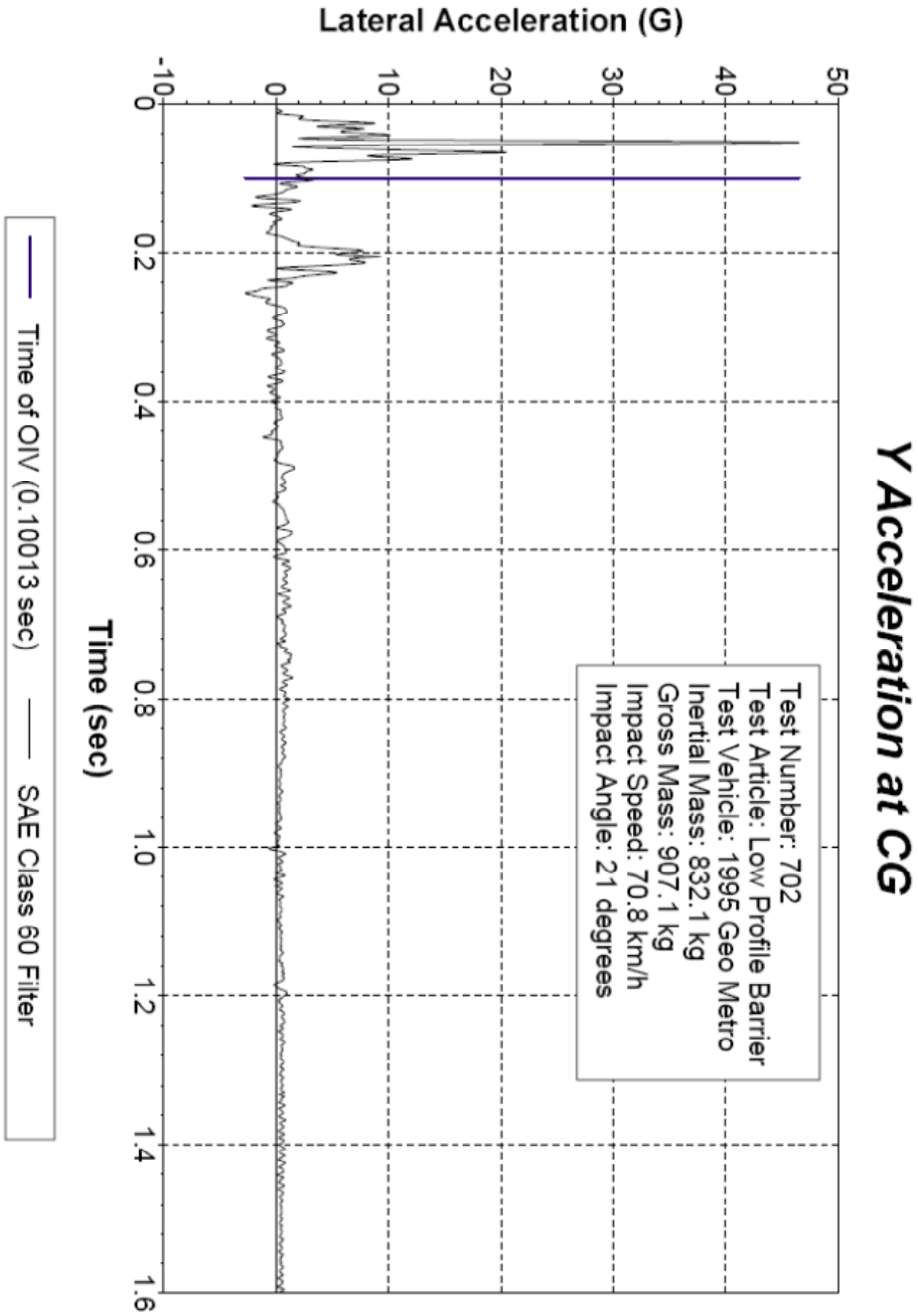

Figure 8-12. Test 702 Y (Lateral) Acceleration at C.G. Vs Time

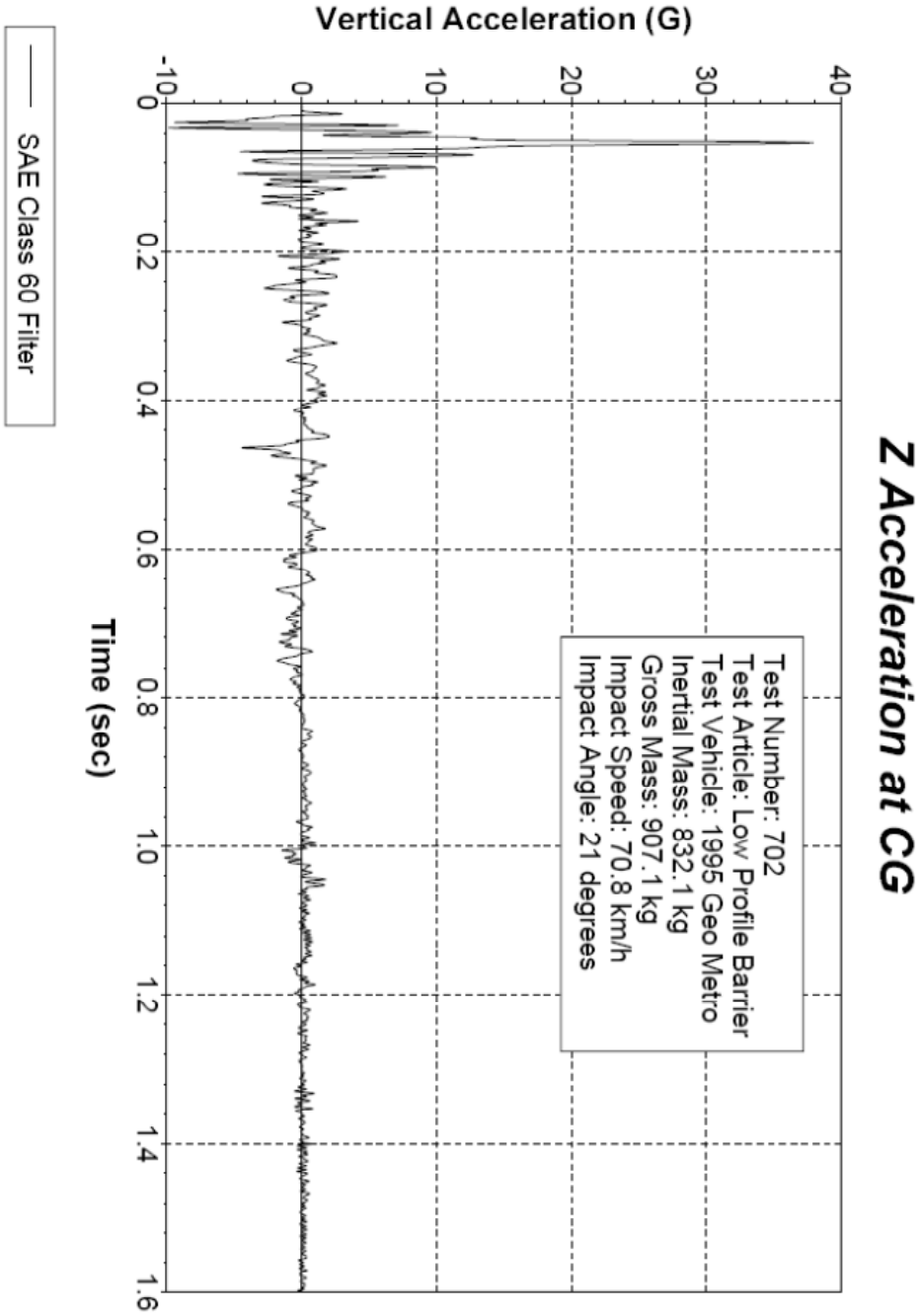

Figure 8-13. Test 702 Z (Vertical) Acceleration at C.G. Vs Time

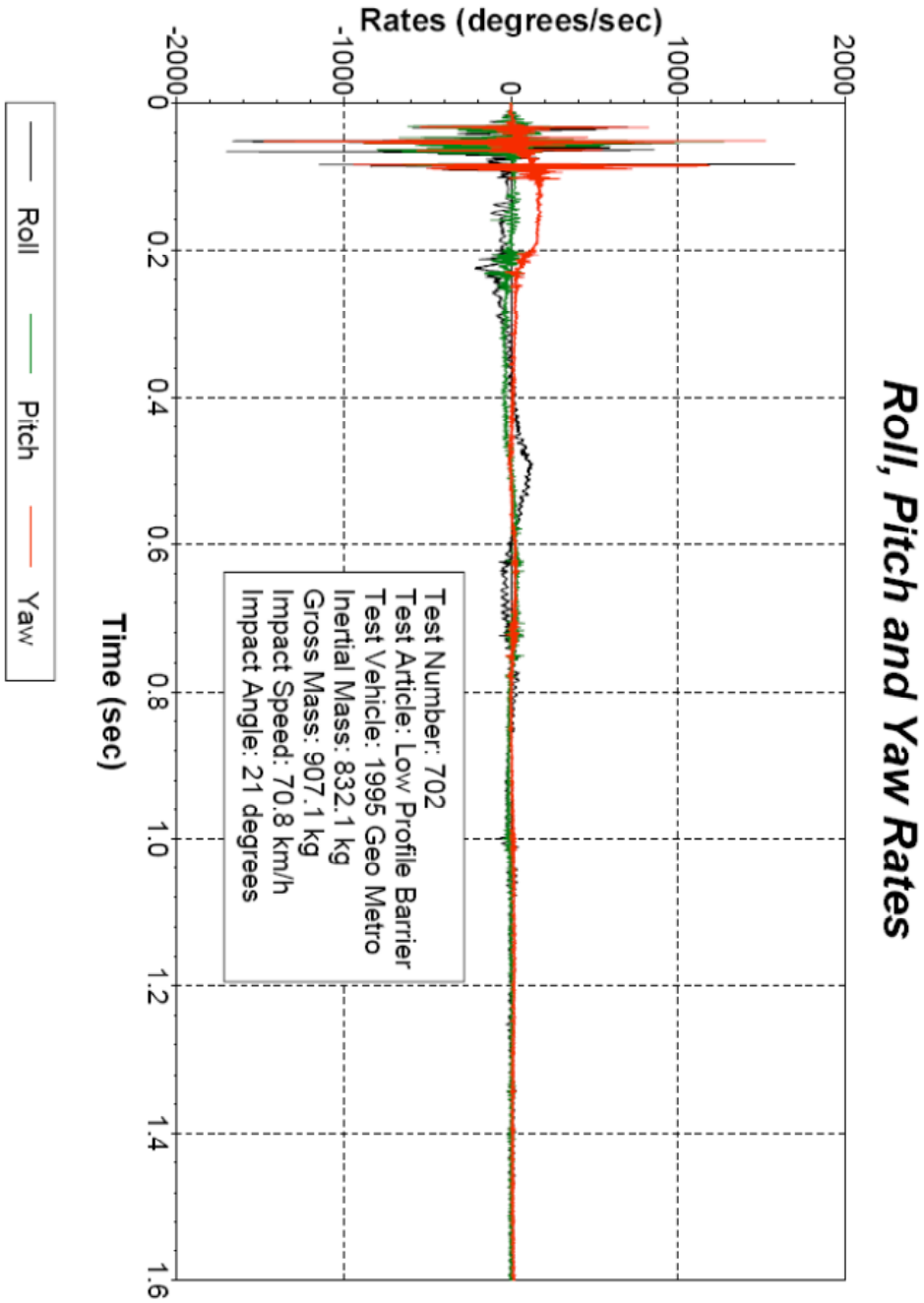

Figure 8-14. Test 702 Roll, Pitch, and Yaw Rates Vs Time

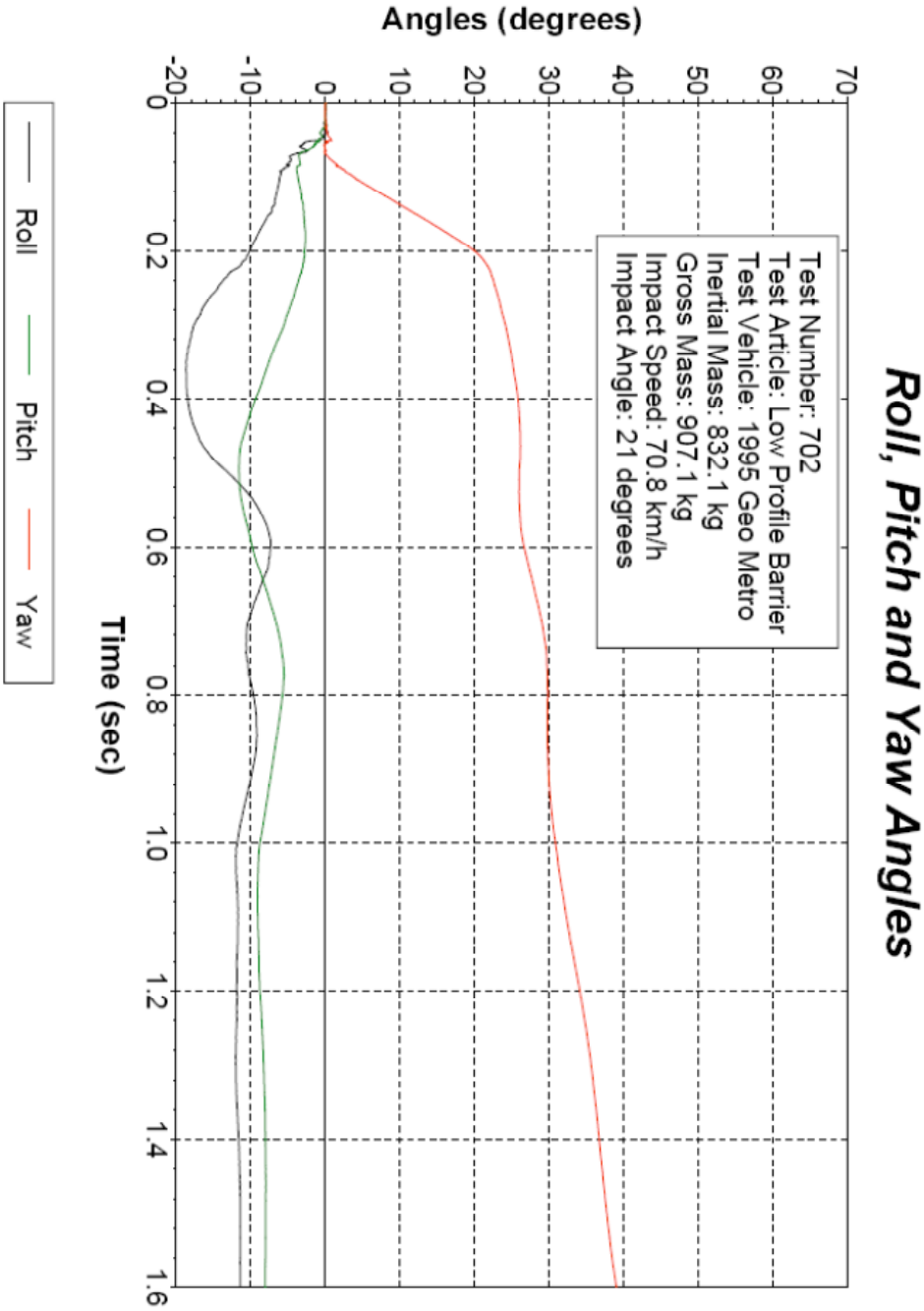

Figure 8-15. Test 702 Roll, Pitch, and Yaw Angles Vs Time

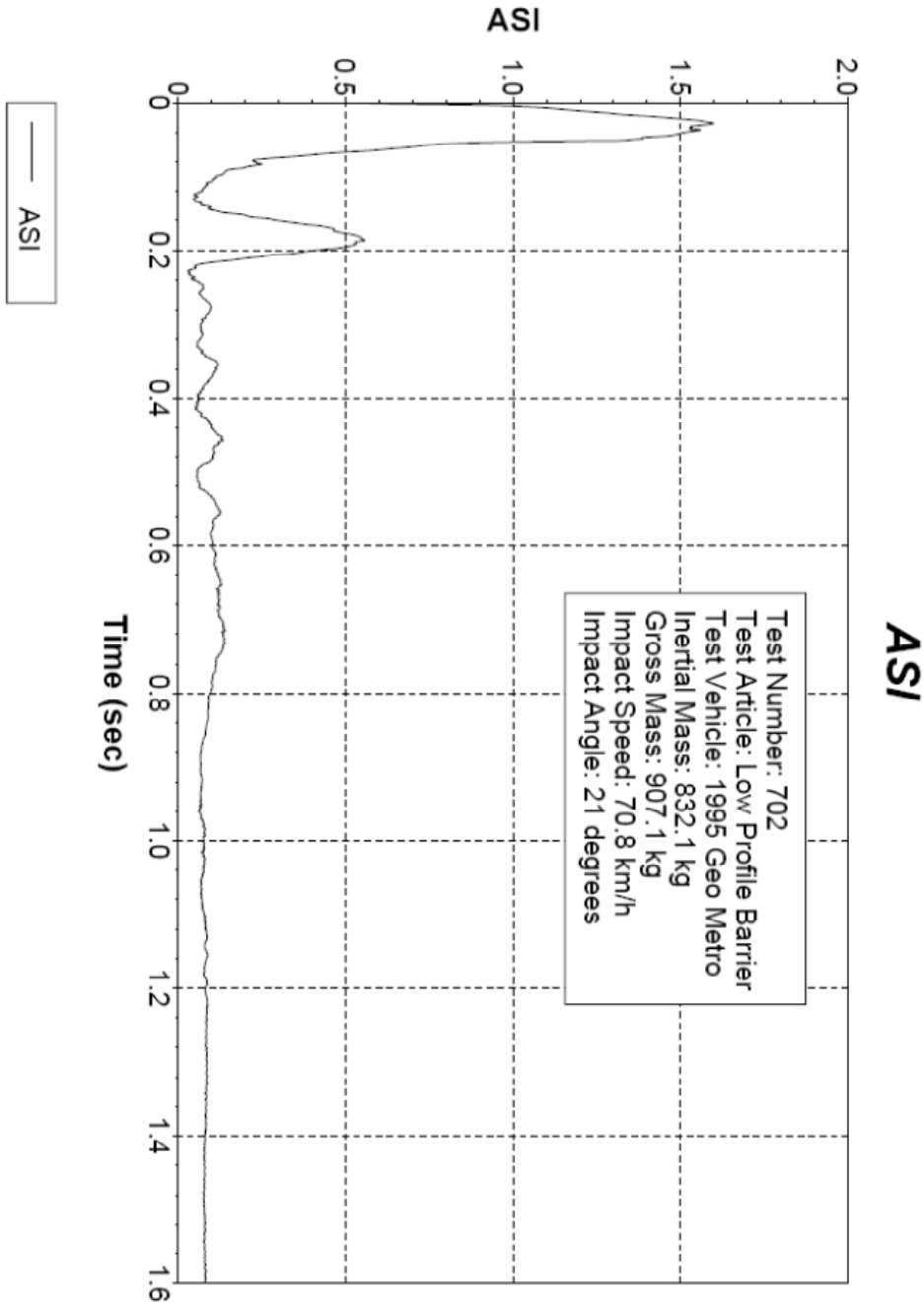

Figure 8-16. Test 702 Vehicle Acceleration Severity Index (ASI) Vs Time

8.5. Computer Modeling Summary of the Low-Profile Barrier

8.5.1. Summary

This section covers the finite element crash test simulations on the low-profile barrier to determine the geometry that had the least permanent deflections and best met construction feasibility. The simulations were completed by Applied Research Associates, Inc. (ARA) under the guidelines of test level 2 of the *National Cooperative Highway Research Program (NCHRP) Report 350*. Prior to the crash test simulations, a foundation had to be design. A 2-dimensional (2-D) finite element parametric study of various cross-sections for the foundation was studied, resulting in one being selected based on its simple constructability and impact deflection resistance. There were two crash test case studies. The first case tested the maximum permanent deflections (installed in weak soil) whereas the second case tested the barrier structure (installed in rigid soil). The study concluded that both the weak and rigid soil simulations were within acceptable limits.

8.5.2. Background

The crash test simulations were tested under the conditions of test level 2-11 of the *NCHRP Report 350* guidelines. It required a 2000-kg pickup truck to impact the barrier at a speed of 43.5 mph (70 km/h) at an angle of 25°. The occupant risk criteria of Table 5.1 of the *NCHRP Report 350* served as a guideline for generally acceptable dynamic performance. The software used to simulate crash testing on the low-profile barrier was LS-DYNA. It is a simulation software package that computes using nonlinear transient dynamic finite element analysis using explicit time integration.

8.5.3. Discussion of Quarter 1 (April 08 – June 08)

During the first quarter, there were three main objectives. These objectives are as follows:

1. Calibration of a soil model
2. A 2-dimensional study for foundation cross-section designs
3. A 3-dimensinal full-length impact with at C2500 (2000-kg) pickup tuck

The approach in modeling the soil was to use a solid continuum in the 2D models to effectively capture realistic soil behaviors important in determining the barrier response, in addition to the passive resistance criteria. These models include elasticity, compaction or permanent set, shear failure, and inertial resistance. The soil design criteria are as follows:

1. Loose sand with a density of 110 pcf.
2. Coefficient of passive lateral earth pressure, $K_p = 3$
3. Deflection to depth ratio = 0.04. This is the approximate relative movement at the top of a retaining wall to reach the maximum passive earth pressure in loose sand, per table C5.5.1-1 of the *Caltrans Bridge Design Specifications, April 2000*, Sect. 5.

4. For 475 mm deep x 30 mm wide block in soil model, total force at 19 mm lateral deflection is 175 N or 39 lbf.

The next step after calibrating the soil model was to determine the most effective foundation cross-section in resisting vehicle impacts. A parametric design study of various cross-sections of the foundation was performed using LS-DYNA to determine effective sizes and geometries. Ten different foundation cross-sections were modeled. The parametric study narrowed the selection of the cross-sections down to sections 3, 8, 9. (See Figure 8-17)

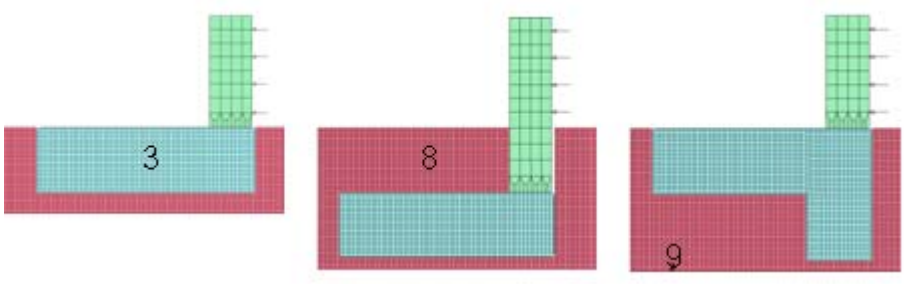

Figure 8-17. Cross-Sections 3, 8, and 9

The full length rigid barrier impact with a C2500 pickup was completed on cross-section 9. (See Figure 8-18) The 3-dimensional simulation of section 9 yielded deflections that were lower than the 2-dimensional parametric cases.

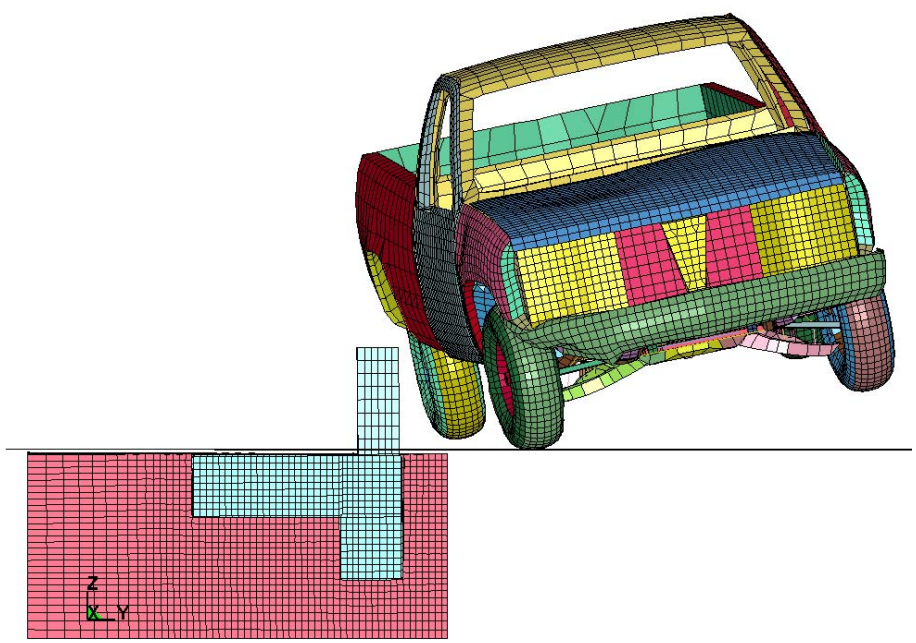

Figure 8-18. C2500 Pickup Impact on Cross-Section 9

Although the L-shape keyed foundation (cross-section 9) was the most resistant to impacts, the decision was made to use cross-section 3 since it was easier to construct and yielded similar results. (*ARA Caltrans Barrier Report, April 21, 2008*)

8.5.4. Discussion of Quarter 2 (July 08 – September 08)

During the second quarter of the project, the crash test simulations (in 3-dimensions) were conducted with two soil extremes. The low-profile barrier is installed on the cross-section 3 foundation for the full crash test simulations. (See Figure 8-19)

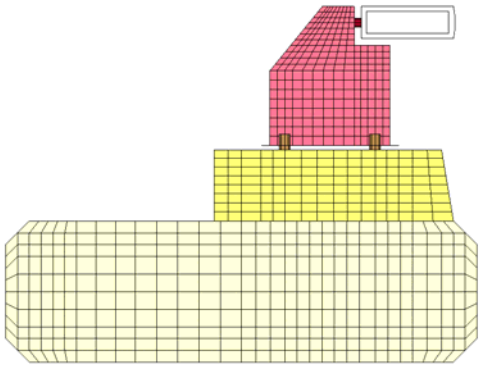

Figure 8-19. Cross-Section 3 foundation with Low-Profile Barrier Installed

The low-profile barrier model was impacted by the pickup truck in weak soil (loose sand) and in rigid soil to evaluate deflections and foundation strength. Only 50 feet of the low-profile barrier was modeled to reduce computation time although a 100 feet long test section was later built and crash tested to validate the simulation. (See Figure 8-20)

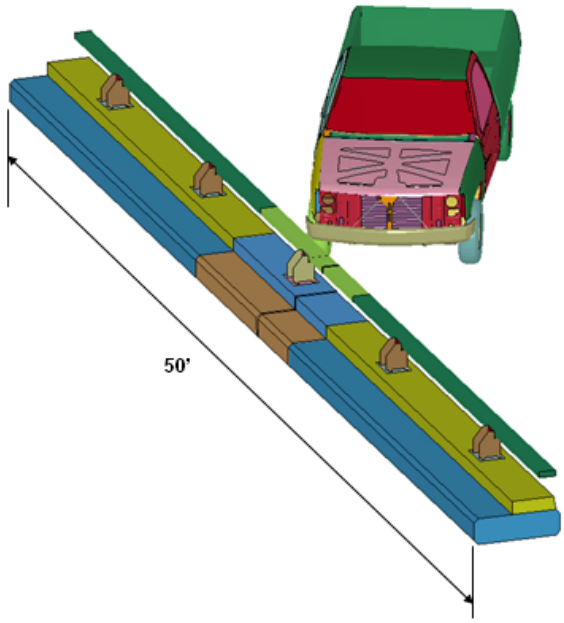

Figure 8-20. 50 Feet Long Test Section

The rigid soil test simulation concluded that the low-profile barrier structure met the evaluation criteria. The mounting bolts for the posts and rail sections were able to carry the loads sufficiently. However, subsequent impacts in the same location could cause steel parts to rupture and possibly fail at the anchor and rail bolts, which would require repair or replacement. (See Figure 8-21)

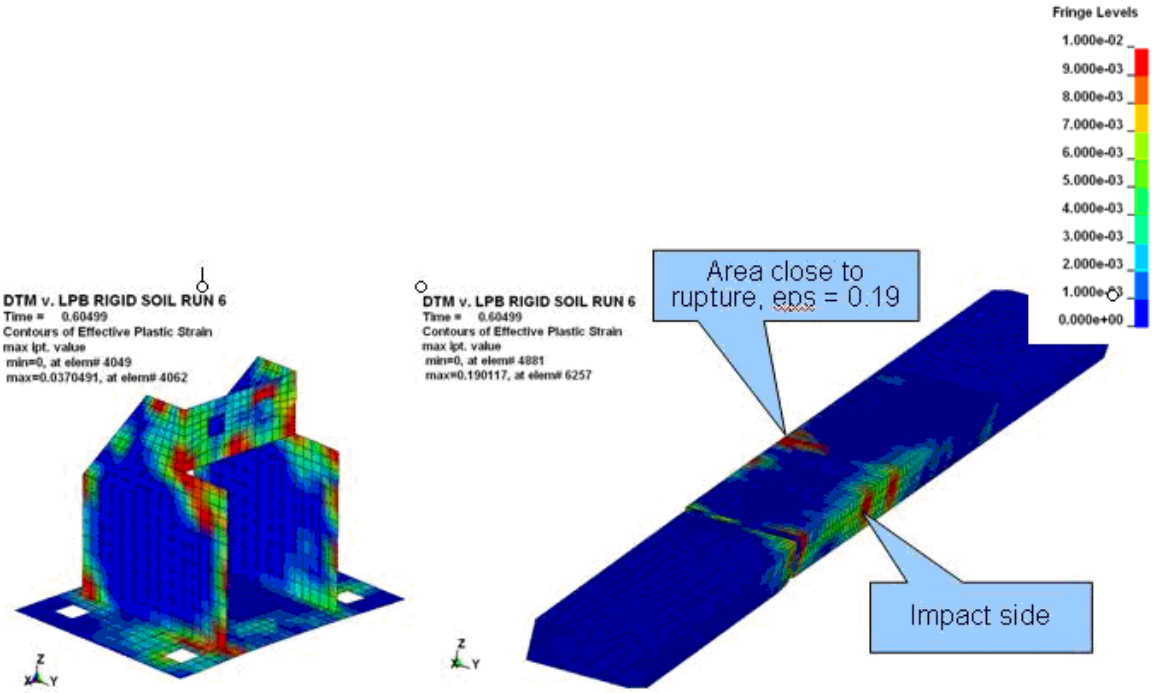

Figure 8-21. Impact side and Area close to rupture

The steel parts deformed plastically but not enough to cause snagging or pocketing concerns for subsequent impacts. However, the high rail strains at the center post from the splice bending needed to be strengthen or redesigned.

The weak soil test simulation was the same as the rigid soil except that the barrier was placed in a 90 pcf (pound per cubic-foot) sand block. The test concluded that the anchor and rail connector bolt maximum forces were less in the weak soil test than in the rigid soil test. Plastic strains in the post plates and rail were also less than the rigid soil test. This simulation focused on evaluating deflections of the barrier, reinforcing steel stresses in the foundation, and vehicle response.

The vehicle was redirected and did not roll, snag, or pocket. The lateral occupant impact velocity (OIV) was 5.03 m/s. The longitudinal OIV was 4.3 m/s. The preferred value in *NCHRP Report 350* is 9 m/s. The lateral and longitudinal ridedown accelerations were 8.2 g and 5.1 g. The preferred value is 15 g. The maximum lateral permanent rail deflection was 66 mm. (See Figure 8-22) (*ARA Caltrans Barrier Report, July 24, 2008*)

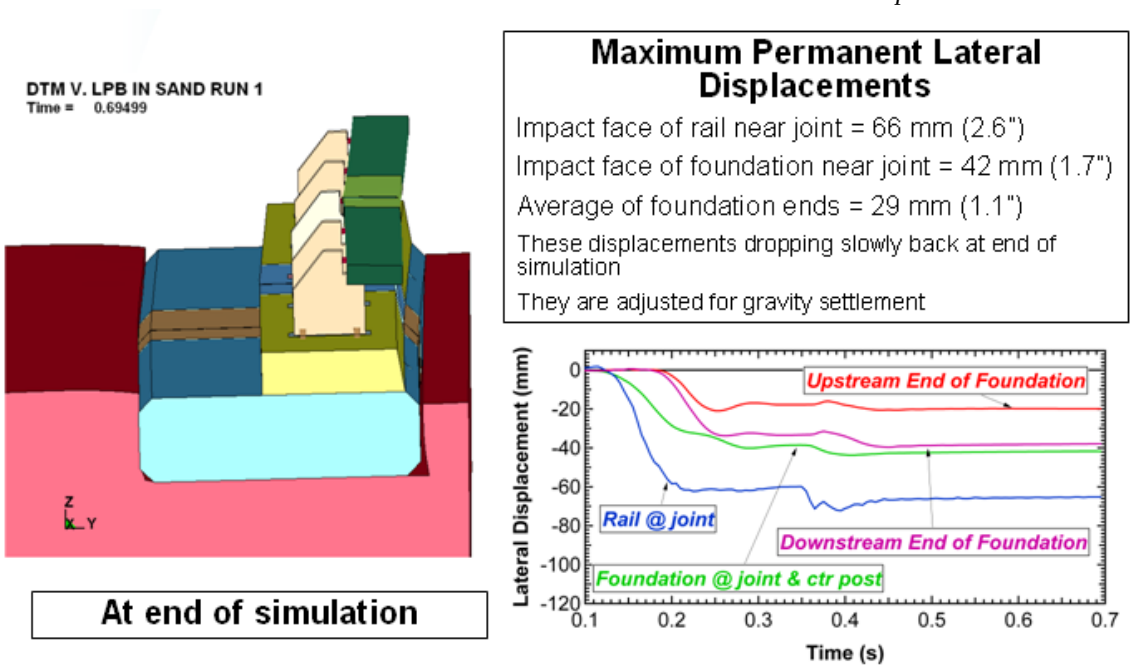

Figure 8-22. Maximum Permanent Lateral Displacements

8.5.5. Discussion of Quarter 3 (July 08 – September 08)

The focus of the work for the last quarter was on crash simulation at the post and at the mid-span of low-profile barrier with the modifications to the rail post connection and anchor bolts strengths. Both the rigid and weak soil cases were simulated. The rail post connection was reinforced with double plate and higher strength bolts were use. For the rigid soil simulation, the addition of the double plate greatly reduced the peak plastic strains seen in the rail when impacted at the post (19% to 2.2% plastic strain for impact at the post). (See Figure 8-23)

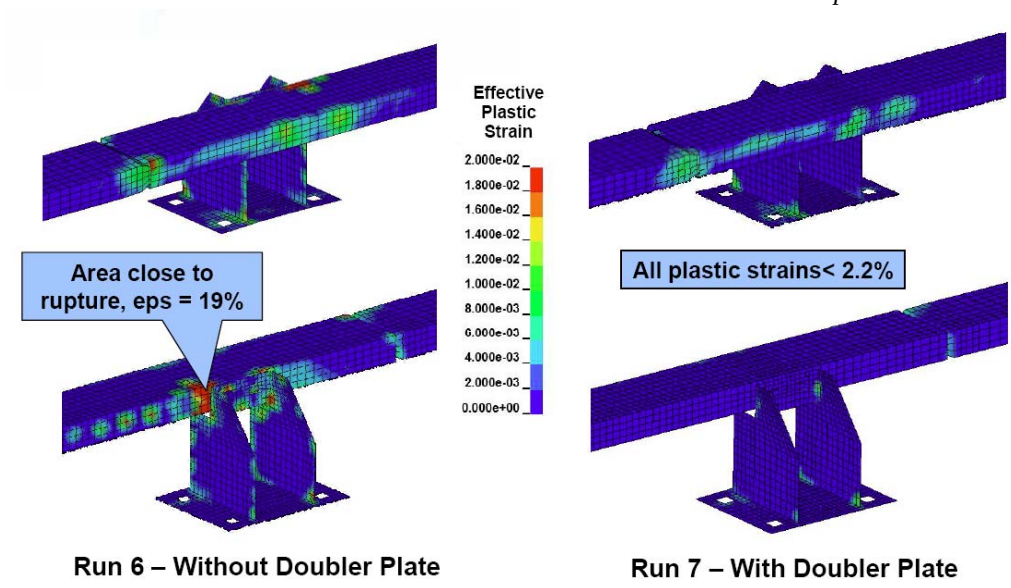

Figure 8-23. Plastic Strains at Post

The largest plastic strains were seen in the upper corner of the downstream post for the mid-span impact (4% plastic strain). (See Figure 8-24)

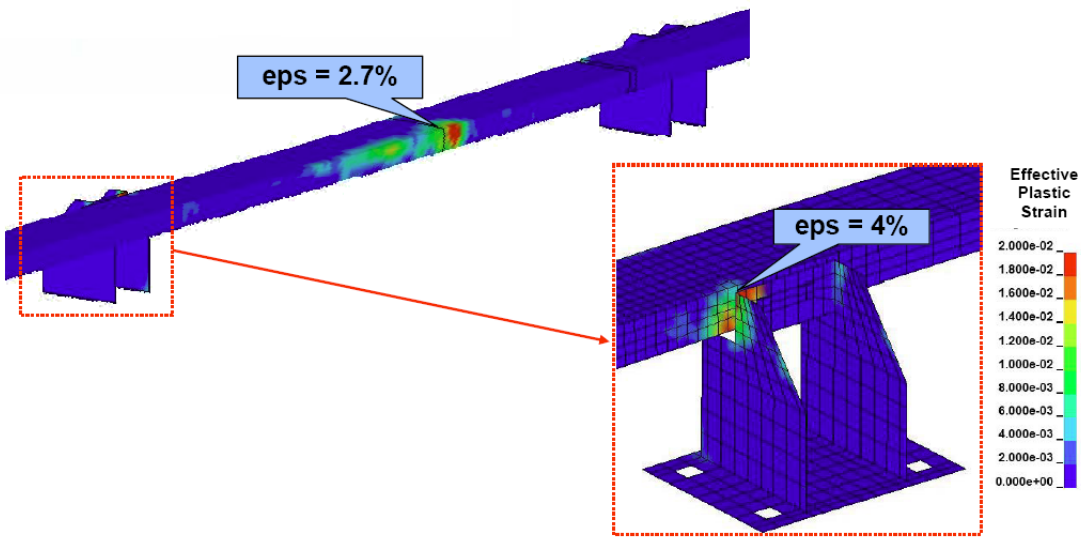

Figure 8-24. Plastic Strains at Mid-Span

For the weak soil simulation, the vehicle's response for impact at the post and mid-span between the posts were acceptable. The vehicle was directed and did not roll over or snag. The lateral and longitudinal OIV was 4.8 m/s and 4.4 m/s. The mid-post impact yielded a higher lateral ridedown acceleration (10.2 g vs. 8.2 g). The permanent lateral rail deflections increased by 11

mm from the impact at the post (66 mm to 77 mm lateral deflection). (See Figure 8-25) (*ARA Caltrans Barrier Report, October 16, 2008*)

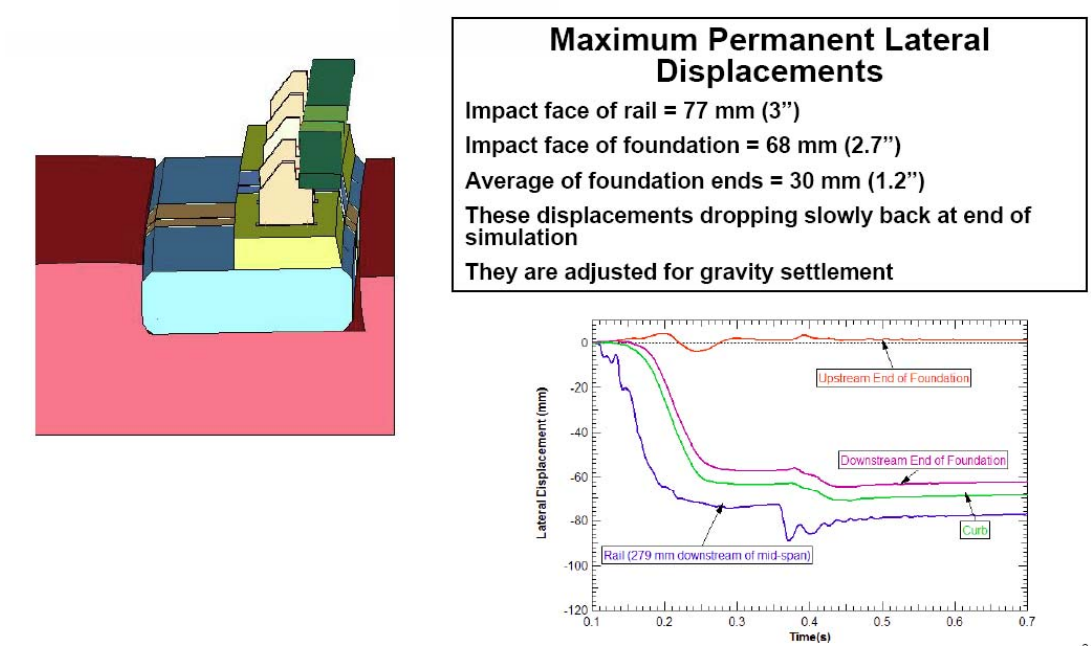

Figure 8-25. Maximum Permanent Lateral Displacements

8.5.6. Conclusion of Computer Model Simulation

The development of the barrier through computer simulations has produced an optimum barrier structure and foundation design that is low-profile. The purpose of the rigid soil case was to test the strength of the barrier. The weak soil case tested the permanent deflections of the barrier and the vehicle's response from the impact. The barrier was design according to the federal requirements for redirecting the vehicle safely without serious injuries to the occupants.

8.6. Stringpot Results for Test 701

String pots and angular rate sensors were used in test 701 to measure dynamic and permanent deflections and rotation of the footing. These were only used in Test 701 to assess movement of the barrier since this was the more severe of the two tests conducted[7].

8.6.1. Stringpot Plots

There was a total of 8 stringpots used at the impact location. Stringpots 1, 3, 5, and 7 were use to measure the rail. Stringpots 2, 4, 6, and 8 were use to measure the footing. Stringpots 1 and 2 were installed upstream of the impact point. Stringpots 3, 4, 5, 6, 7, and 8 were installed downstream of the impact point.

Table 8-6. Rail Displacements

Stringpot	Dynamic Displacement (mm)	Final Static Displacement (mm)
1	5.444	2.313
3	12.926	8.288
5	13.844	9.823
7	9.612	8.832

Table 8-7. Footing Displacements

Stringpot	Dynamic Displacement (mm)	Final Static Displacement (mm)
2	1.451	0.386
4	1.374	0.371
6	1.191	0.408
8	0.791	0.173

[7] *The stringpot and angular rate sensor analysis of the low-profile barrier does not fall under the scope of A2LA accreditation.*

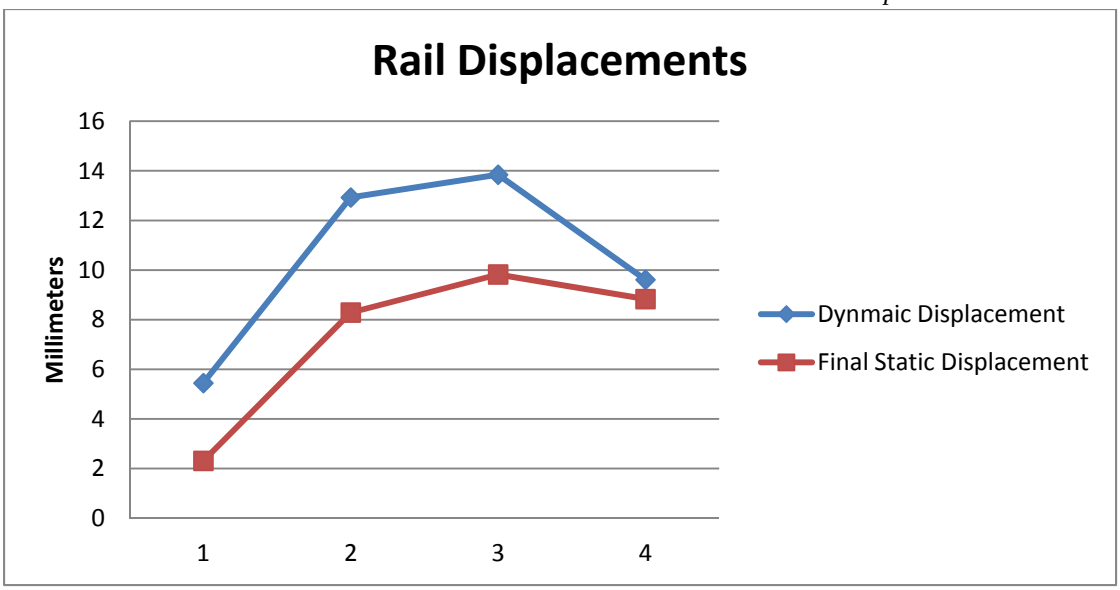

Figure 8-26. Rail Displacement

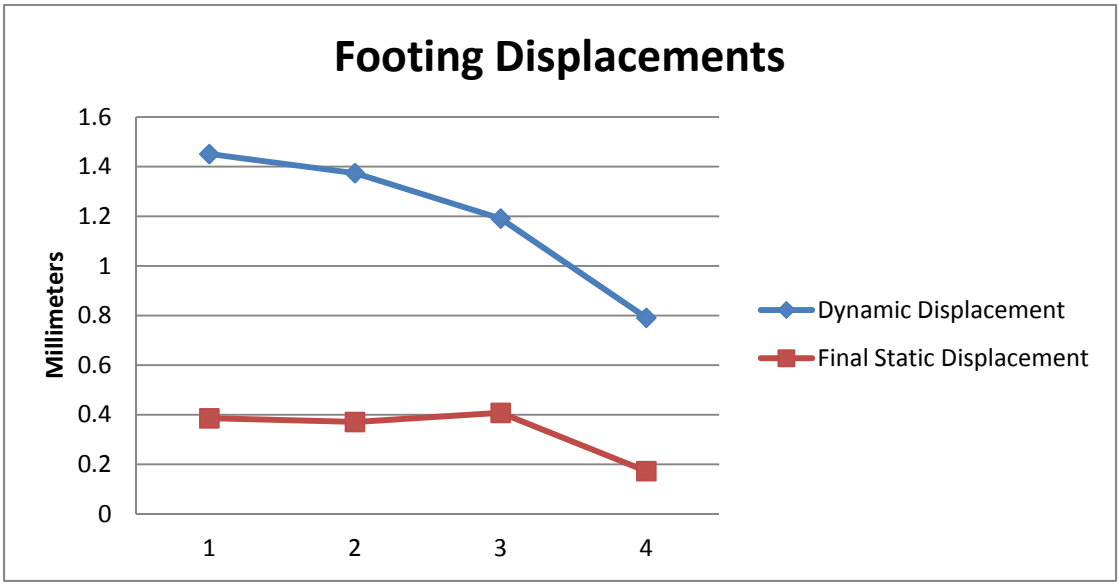

Figure 8-27. Footing Displacement

8.6.2. Stringpot Results in English Units

1. Stringpot Channel 1

Starting point (Average of first 8342 points):	0.048123 inches
Peak Displacement @ time = 0.747133853:	-0.166194 inches
Ending Point @ time = 2.000040289:	-0.042930 inches
Dynamic Deflection:	0.214317 inches ~ **<u>0.214 inches</u>**
Final Static Displacement:	0.091053 inches ~ **<u>0.091 inches</u>**

2. Stringpot Channel 2
   Starting point (Average of first 8491 points): 0.052845 inches
   Peak Displacement @ time = 0.75916676: -0.004275 inches
   Ending Point (Average over 1.5 to 2 seconds): 0.037625 inches
   Dynamic Deflection: 0.057120 inches ~ **0.057 inches**
   Final Static Displacement: 0.015220 inches ~ **0.015 inches**

3. Stringpot Channel 3
   Starting point (Average over 0 to 0.5 seconds): 0.028927 inches
   Peak Displacement @ time = 0.940754193: -0.479964 inches
   Ending Point (Average over 2 to 2.5 seconds): -0.297389 inches
   Dynamic Deflection: 0.508891 inches ~ **0.509 inches**
   Final Static Displacement: 0.326316 inches ~ **0.326 inches**

4. Stringpot Channel 4
   Starting point (Average over 0 to 0.5 seconds): 0.061732 inches
   Peak Displacement @ time = 0.765339478: 0.007638 inches
   Ending Point (Average over 2 to 2.5 seconds): 0.047124 inches
   Dynamic Deflection: 0.054094 inches ~ **0.054 inches**
   Final Static Displacement: 0.014608 inches ~ **0.015 inches**

5. Stringpot Channel 5
   Starting point (Average of 0 to 0.5 seconds): -0.005803 inches
   Peak Displacement @ time = 0.940519786: -0.550826 inches
   Ending Point (Average over 2 to 2.5 seconds): -0.392523 inches
   Dynamic Deflection: 0.545023 inches ~ **0.545 inches**
   Final Static Displacement: 0.386720 inches ~ **0.387 inches**

6. Stringpot Channel 6
   Starting point (Average of 0 to 0.5 seconds): 0.005633 inches
   Peak Displacement @ time = 0.763464221: -0.041247 inches
   Ending Point (Average over 2 to 2.5 seconds): -0.010445 inches
   Dynamic Deflection: 0.046880 inches ~ **0.047 inches**
   Final Static Displacement: 0.016078 inches ~ **0.016 inches**

7. Stringpot Channel 7
   Starting point (Average of 0 to 0.5 seconds): 0.057576 inches
   Peak Displacement @ time = 0.78213866: -0.320861 inches
   Ending Point (Average over 2 to 2.5 seconds): -0.290129 inches
   Dynamic Deflection: 0.378437 inches ~ **0.378 inches**
   Final Static Displacement: 0.347705 inches ~ **0.348 inches**

8. Stringpot Channel 8
   Starting point (Average of 0 to 0.5 seconds): 0.088462 inches
   Peak Displacement @ time = 0.768855586: 0.057333 inches

Ending Point (Average over 2 to 2.5 seconds): 0.081643 inches
Dynamic Deflection: 0.031129 inches ~ **0.031 inches**
Final Static Displacement: 0.006819 inches ~ **0.007 inches**

8.6.3. Stringpot Results in ISO Units

1. Stringpot Channel 1
   Starting point (Average of first 8342 points): 1.222333 mm
   Peak Displacement @ time = 0.747133853: -4.221328 mm
   Ending Point @ time = 2.000040289: -1.090414 mm
   Dynamic Deflection: 5.443661 mm ~ **5.444 mm**
   Final Static Displacement: 2.312747 mm ~ **2.313 mm**

2. Stringpot Channel 2
   Starting point (Average of first 8491 points): 1.342267 mm
   Peak Displacement @ time = 0.75916676: -0.108580 mm
   Ending Point (Average over 1.5 to 2 seconds): 0.955687 mm
   Dynamic Deflection: 1.450847 mm ~ **1.451 mm**
   Final Static Displacement: 0.386580 mm ~ **0.386 mm**

3. Stringpot Channel 3
   Starting point (Average over 0 to 0.5 seconds): 0.734741 mm
   Peak Displacement @ time = 0.940754193: -12.191096 mm
   Ending Point (Average over 2 to 2.5 seconds): -7.553680 mm
   Dynamic Deflection: 12.925837 mm ~ **12.926 mm**
   Final Static Displacement: 8.288421 mm ~ **8.288 mm**

4. Stringpot Channel 4
   Starting point (Average over 0 to 0.5 seconds): 1.567992 mm
   Peak Displacement @ time = 0.765339478: 0.194013 mm
   Ending Point (Average over 2 to 2.5 seconds): 1.196951 mm
   Dynamic Deflection: 1.373979 ~ **1.374 mm**
   Final Static Displacement: 0.371041 ~ **0.371 mm**

5. Stringpot Channel 5
   Starting point (Average of 0 to 0.5 seconds): -0.147392 mm
   Peak Displacement @ time = 0.940519786: -13.990984 mm
   Ending Point (Average over 2 to 2.5 seconds): -9.970091 mm
   Dynamic Deflection: 13.843592 mm ~ **13.844 mm**
   Final Static Displacement: 9.822699 mm ~ **9.823 mm**

6. Stringpot Channel 6
   Starting point (Average of 0 to 0.5 seconds): 0.143083 mm
   Peak Displacement @ time = 0.763464221: -1.047680 mm
   Ending Point (Average over 2 to 2.5 seconds): -0.265293 mm
   Dynamic Deflection: 1.190763 mm ~ **1.191 mm**

Final Static Displacement: 0.408376 mm ~ **0.408 mm**

7. Stringpot Channel 7
   Starting point (Average of 0 to 0.5 seconds): 1.462426 mm
   Peak Displacement @ time = 0.78213866: -8.149866 mm
   Ending Point (Average over 2 to 2.5 seconds): -7.369265 mm
   Dynamic Deflection: 9.612292 mm ~ **9.612 mm**
   Final Static Displacement: 8.831691 mm ~ **8.832 mm**

8. Stringpot Channel 8
   Starting point (Average of 0 to 0.5 seconds): 2.246941 mm
   Peak Displacement @ time = 0.768855586: 1.456260 mm
   Ending Point (Average over 2 to 2.5 seconds): 2.073720 mm
   Dynamic Deflection: 0.790681 mm ~ **0.791 mm**
   Final Static Displacement: 0.173221 mm ~ **0.173 mm**

8.6.4. Rotation of the footing

The following equations were use to integrate the raw data from the angular rate sensors to get rotation.

1. Simpson's Rule

$$\int_a^b f(x)dx \approx \frac{b-a}{6}\left[f(a) + 4f\left(\frac{a+b}{2}\right) + f(b)\right]$$

2. Trapezoidal Rule

$$\int_a^b f(x)dx \approx (b-a)\frac{f(a)+f(b)}{2}$$

The data from the rate gyros concluded that the footing did not rotate. The results from the angular rate sensors are as follows:

Rate Gyro Channel 1
Maximum Rotation ~ **0.000 Degrees**

Rate Gyro Channel 2
Maximum Rotation ~ **0.000 Degrees**

Rate Gyro Channel 3
Maximum Rotation ~ **0.000 Degrees**

8.7. Detailed Drawings

The following details in Figure 8-28 to 8-32 are for the tested barrier only.

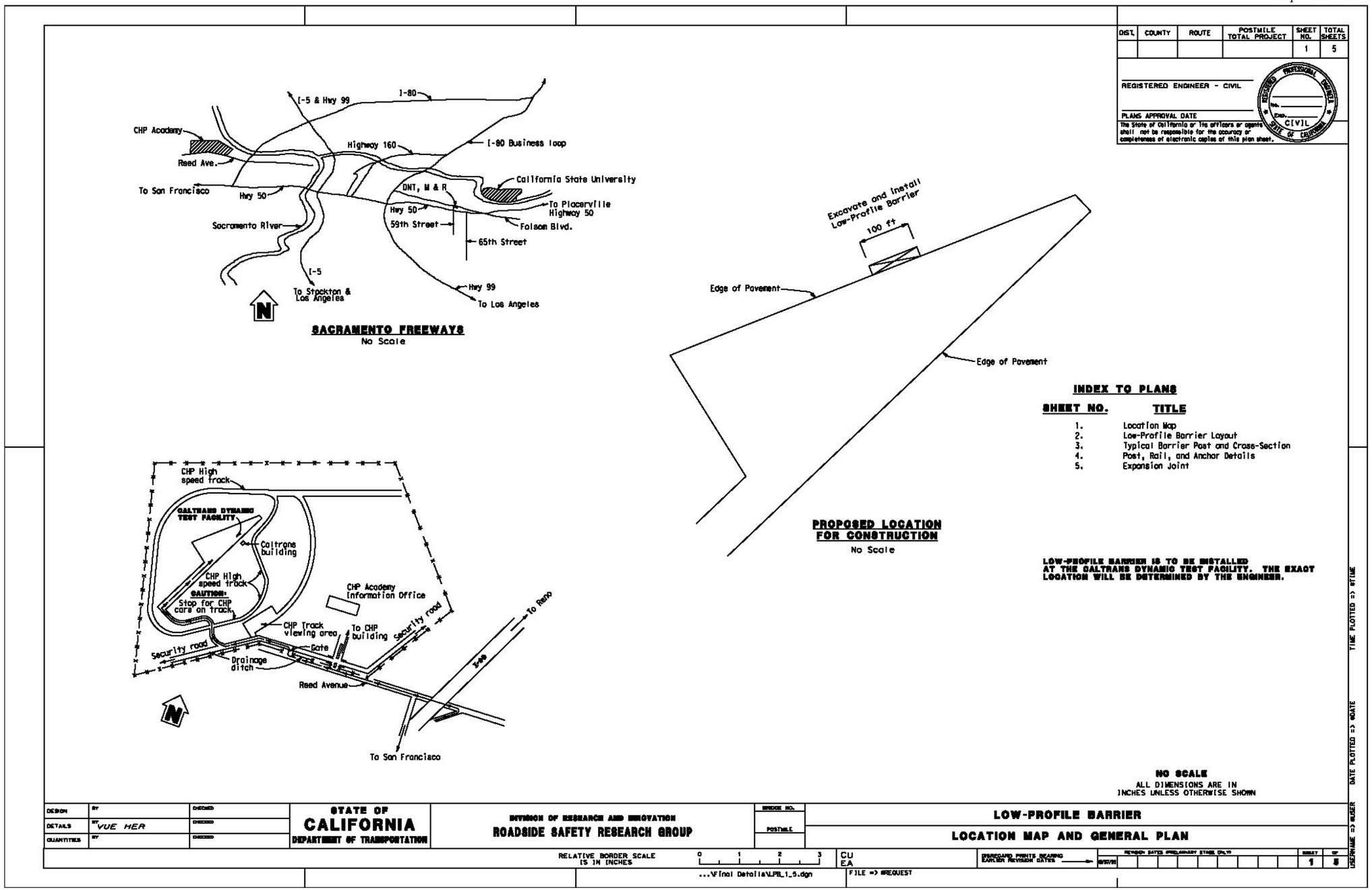

Figure 8-28. Caltrans Low-Profile Barrier Detail No. 1 (Tested Barrier)

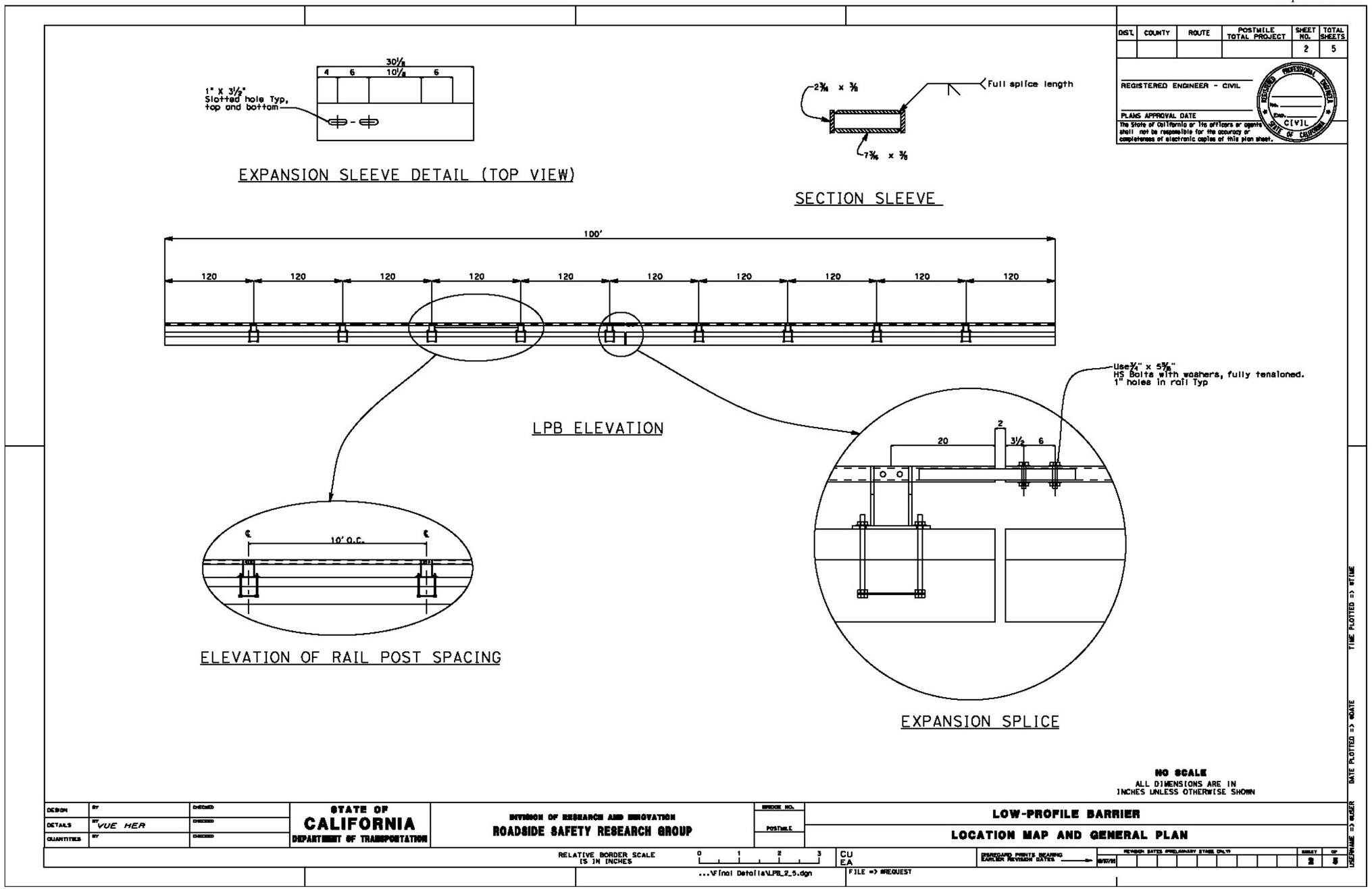

Figure 8-29. Caltrans Low-Profile Barrier Detail No. 2 (Tested Barrier)

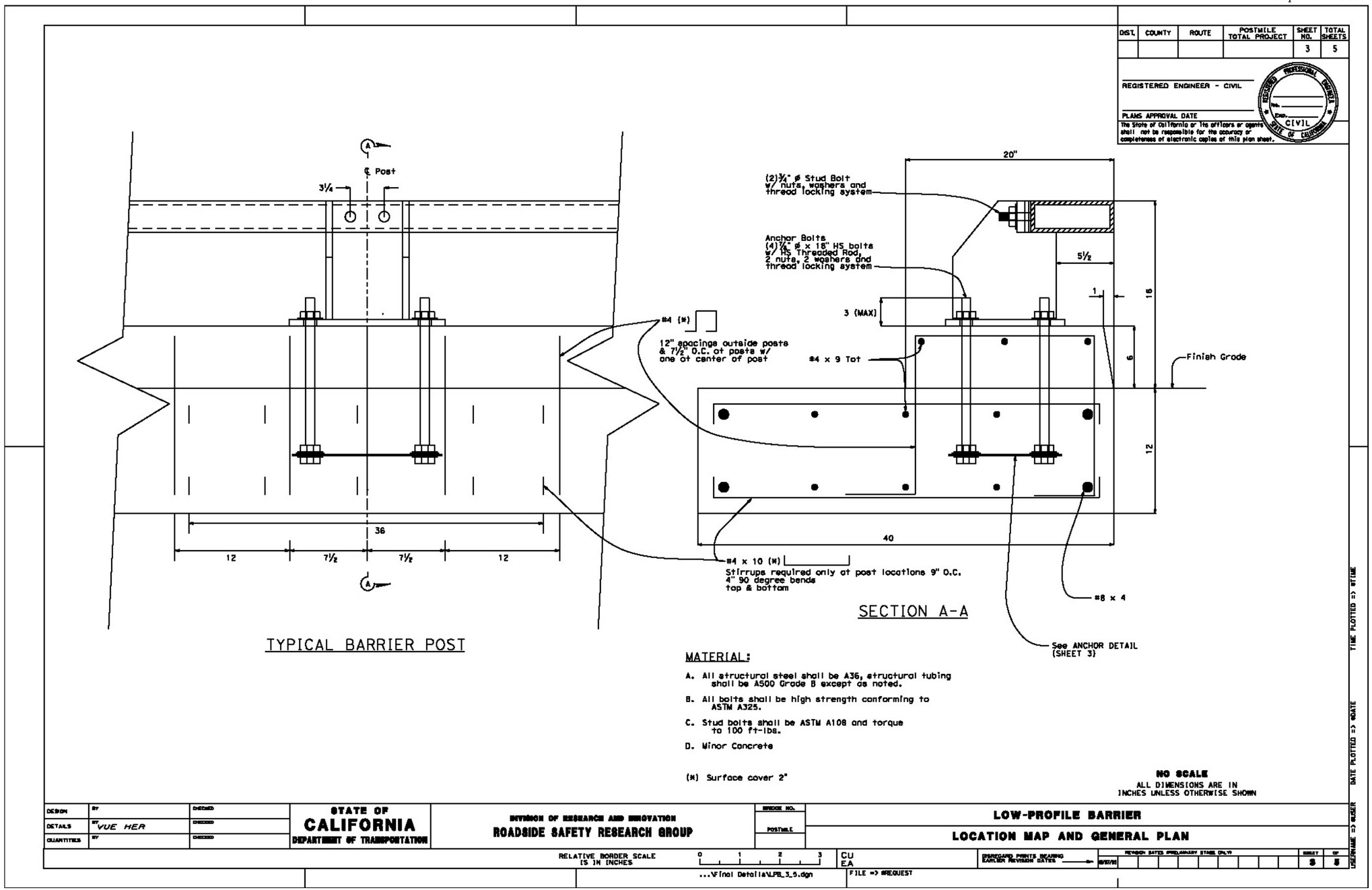

Figure 8-30. Caltrans Low-Profile Barrier Detail No. 3 (Tested Barrier)

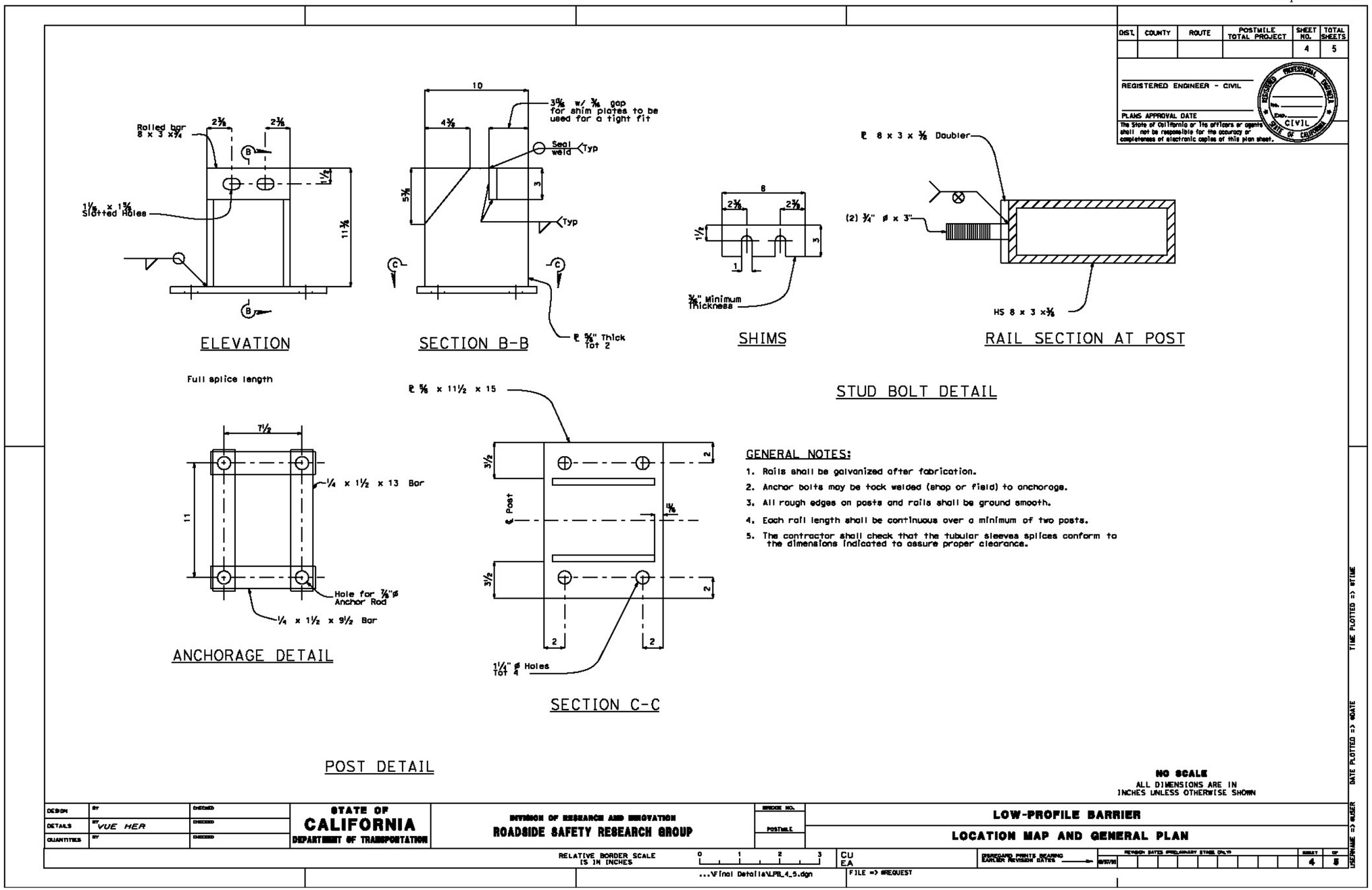

Figure 8-31. Caltrans Low-Profile Barrier Detail No. 4 (Tested Barrier)

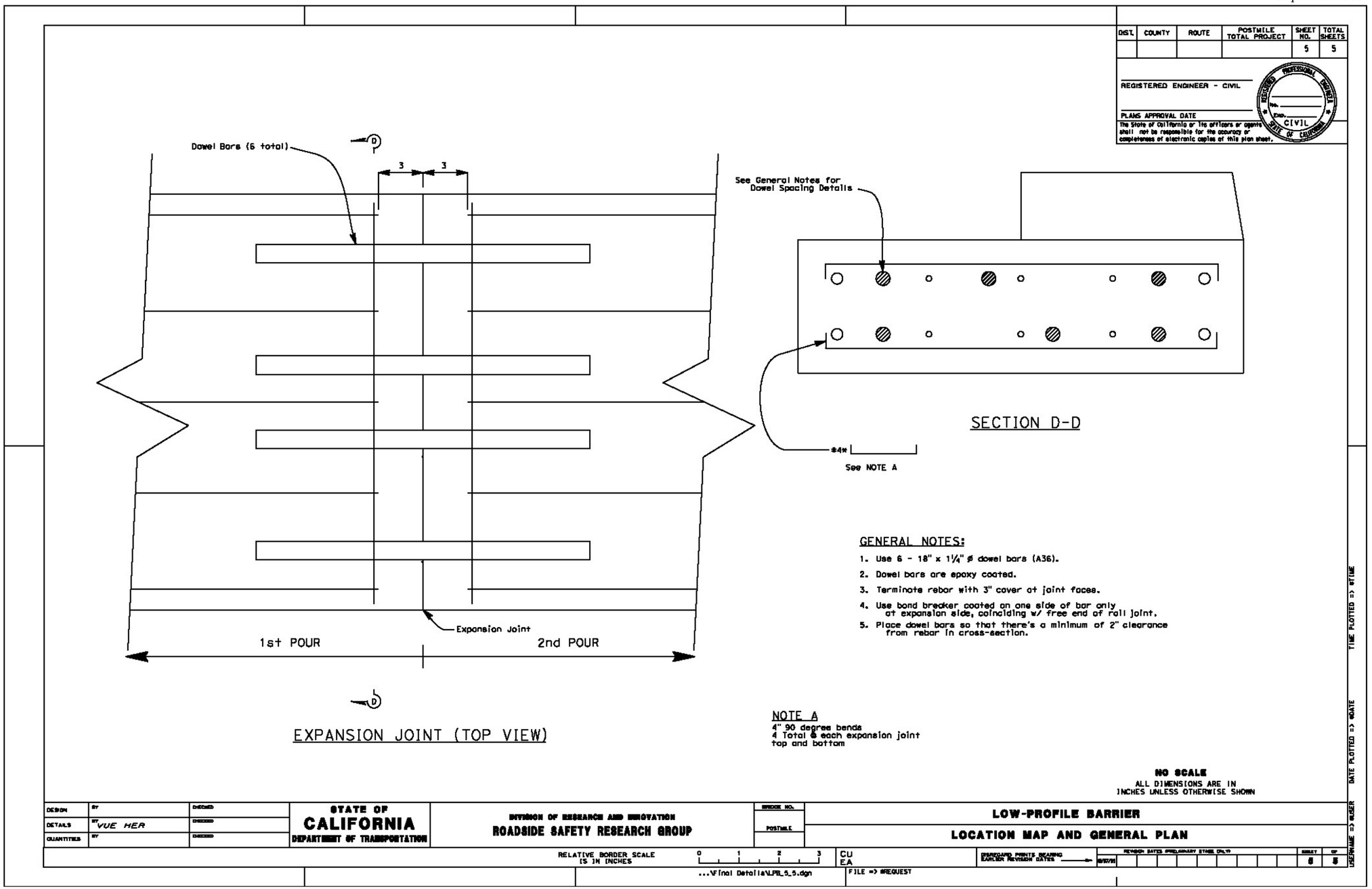

Figure 8-32. Caltrans Low-Profile Barrier Detail No. 5 (Tested Barrier)

9. References

1. *Applied Research Associates, Inc. Caltrans Barrier Report,* April 21, 2008

2. *Applied Research Associates, Inc. Caltrans Barrier Report*, July 24, 2008

3. *Applied Rsearch Associates, Inc. Caltrans Barrier Report*, October 16, 2008

4. *Highway Design Guide*. American Association of State Highway & Transportation Officials. Washington, DC. 2002 Edition. (3rd edition).
5. *Highway Design Manual*. State of California Department of Transportation. Sacramento, CA. 6th Edition.
6. *Report 350, Recommended Procedures for the Safety Performance Evaluation of Highway Features.* Transportation Research Board, National Cooperative Highway Research Program Report 350. Washington, DC. 1993.
7. *Traffic Manual*. State of California Department of Transportation. Sacramento, CA. Revised Sept. 13, 2002.