DEVELOPMENT AND CRASH TESTING OF AN AESTHETIC, SEE-THROUGH BRIDGE RAIL, TYPE 90

STATE OF CALIFORNIA

DEPARTMENT OF TRANSPORTATION
DIVISION OF RESEARCH AND INNOVATION
OFFICE OF SAFETY INNOVATION AND COOPERATIVE RESEARCH

Supervised by.....Robert Meline, P.E.

Principal Investigator..... John Jewell, P.E.

Report Prepared by .....David Whitesel, P.E.

Research Performed by..... Roadside Safety Research Group

December, 2008

STATE OF CALIFORNIA

DEPARTMENT OF TRANSPORTATION
DIVISION OF RESEARCH AND INNOVATION
OFFICE OF MATERIALS AND INFRASTRUCTURE

DEVELOPMENT AND CRASH TESTING OF AN AESTHETIC, SEE-THROUGH BRIDGE RAIL, TYPE 90

Supervised by.....Robert Meline, P.E.

Principal Investigator..... John Jewell, P.E.

Report Prepared by .....David Whitesel, P.E.

Research Performed by..... Roadside Safety Research Group

Robert Meline, P.E.
Chief
Roadside Safety Research Group

John Jewell, P.E.
Senior Transportation Engineer
Roadside Safety Research Group

David Whitesel, P.E.
Transportation Engineer
Roadside Safety Research Group

TECHNICAL REPORT STANDARD TITLE PAGE

1. REPORT NO. **FHWA/CA08-0766**	2. GOVERNMENT ACCESSION NO.	3. RECIPIENT'S CATALOG NO.
4. TITLE AND SUBTITLE DEVELOPMENT AND CRASH TESTING OF AN AESTHETIC, SEE-THROUGH BRIDGE RAIL, TYPE 90		5. REPORT DATE December 2008 6. PERFORMING ORGANIZATION CODE
7. AUTHOR(S) David Whitesel, John Jewell, Robert Meline		8. PERFORMING ORGANIZATION REPORT NO. FHWA/CA08-0766
9. PERFORMING ORGANIZATION NAME AND ADDRESS Roadside Safety Research Group California Department of Transportation 5900 Folsom Blvd., Sacramento, CA. 95819		10. WORK UNIT NO. 11. CONTRACT OR GRANT NO. CA08-0766
12. SPONSORING AGENCY NAME AND ADDRESS California Department of Transportation 5900 Folsom Blvd., Sacramento CA. 95819		13. TYPE OF REPORT & PERIOD COVERED FINAL 14. SPONSORING AGENCY CODE

15. SUPPLEMENTARY NOTES

This project was performed in cooperation with the US Department of Transportation, Federal Highway Administration, under the research project titled "DEVELOPMENT AND CRASH TESTING OF TWO AESTHETIC, SEE-THROUGH BRIDGE RAILS."

16. ABSTRACT

A newly developed aesthetic bridge rail, the Type 90, was tested in accordance with NCHRP Report 350. The bridge rail is a steel post and beam system atop a concrete curb with a reverse slope of 5.2° from vertical on the traffic side. The "reverse-slope" raises the reaction point of impacting vehicles, reducing the potential for vehicle roll. The concrete curb is 550 mm high and the total height of the rail is 925 mm. The steel rail consists of a 254x102x6.4-mm tube steel beams with 178x127x7.9-mm tube steel posts spaced 3 m apart. The barrier tested was about 24 m long and was constructed at the Caltrans Dynamic Test Facility in West Sacramento, California.

Three crash tests were conducted under Report 350 Test Level 4, one with a 2000-kg pickup truck, one with an 820-kg small car, and one with an 8000-kg single unit van truck. The results of the three tests were within the limits of the Report 350 guidelines.

The Type 90 bridge rail is recommended for approval on California highways requiring TL-4 bridge rails. Since it is symmetric, the Type 90 is also recommended in locations where a reverse hit is possible.

17. KEY WORDS Barriers, Crash Test, Bridge Rail, Steel, Vehicle Impact Test, Aesthetic, See-through, Type 90		18. DISTRIBUTION STATEMENT No Restrictions. This document is available through the National Technical Information Service, Springfield, VA 22161	
19. SECURITY CLASSIF. (OF THIS REPORT) Unclassified	20. SECURITY CLASSIF. (OF THIS PAGE) Unclassified	21. NO. OF PAGES 90	22. PRICE

NOTICE

The contents of this report reflect the views of the Roadside Safety Research Group, which is responsible for the facts and the accuracy of the data presented herein. The contents do not necessarily reflect the official views or policies of the State of California or the Federal Highway Administration. This report does not constitute a standard specification or regulation.

Neither the State of California nor the United States Government endorses products or manufacturers. Trade or manufacturers' names appear herein only because they are considered essential to the object of this document.

METRIC (SI) to English System of Measurement

SI CONVERSION FACTORS

To Convert From	To	Multiply By
	ACCELERATION	
m/s^2	ft/s^2	3.281
	AREA	
m^2	ft^2	10.764
	ENERGY	
Joule (J)	ft-lb_f	0.7376
	FORCE	
Newton (N)	lb_f	0.2248
	LENGTH	
m	ft	3.281
m	in	39.37
cm	in	0.3937
mm	in	0.03937
	MASS	
kg	lb_m	2.205
	PRESSURE OR STRESS	
kPa	psi	0.1450
	VELOCITY	
km/h	mph	0.6214
m/s	ft/s	3.281
km/h	ft/s	0.9113

ACKNOWLEDGMENTS

This work was accomplished in cooperation with the United States Department of Transportation, Federal Highway Administration.

Special appreciation is due to the following staff members of the Division of Research and Innovation and Materials Engineering and Testing Services for their help on this project: John Jewell, Mike O'Keeffe, Ali Zalekian, Malinda Gallaher, Christopher Caldwell, and Larry Moore, test preparation, data reduction, vehicle preparation, and video processing; Dave Bengel, Independent Camera Operator; Eric Jacobson and Ed Ung, electronic instrumentation; Martin Zanotti, Mike Said, and Bill Poroshin, machine shop services.

Other persons from Caltrans who made important contributions include: Tillat Satter, and Roberto Lacalle, Structures Design; Don Tateishi, Ed Andersen, and Jon Hirtz, Headquarters Photo Section; Tony Tipton, Jack Rothaus, and Loren Newell, Structures Construction.

Nahed Abdin, while working for Caltrans Structures Design, designed the bridge rail. Applied Research Associates of Mountain View, CA, performed the finite element modeling. Altman General Engineering of Yuba City; constructed the test article under the supervision of Joel Altman, owner.

TABLE OF CONTENTS

1 INTRODUCTION 1

1.1 Problem 1

1.2 Objective 1

1.3 Background and Significance of Work 1

1.4 Literature Search 2

1.5 Scope 2

2 TECHNICAL DISCUSSION 3

2.1 Test Conditions - Crash Tests 3

2.1.1 Test Facilities 3

2.1.2 Test Barrier Design and Construction 3

2.1.3 Test Vehicles 7

2.1.4 Data Acquisition System 7

2.2 Test Results - Crash Tests 8

2.2.1 Impact Description - Test 631 8

2.2.2 Vehicle Damage - Test 631 14

2.2.3 Barrier Damage - Test 631 14

2.2.4 Impact Description - Test 632 15

2.2.5 Vehicle Damage - Test 632 21

2.2.6 Barrier Damage - Test 632 21

2.2.7 Dummy Response - Test 632 21

2.2.8 Impact Description - Test 633 21

2.2.9 Vehicle Damage - Test 633 27

2.2.10 Barrier Damage - Test 633 27

2.2.11 Dummy Response - Test 633 27

2.2.12 Impact Description - Test 634 27

2.2.13 Vehicle Damage - Test 634 34

2.2.14 Barrier Damage - Test 634 34

2.3 Discussion of Test Results - Crash Tests 35

2.3.1 General - Evaluation Methods (Tests 631, 632, 633 and 634) 35

2.3.2 Structural Adequacy 35

2.3.3 Occupant Risk 40

2.3.4 Vehicle Trajectory 40

3 CONCLUSION 41

4 RECOMMENDATION 42

5 IMPLEMENTATION 42

6 REFERENCES 43

7 APPENDICES 44

7.1 Test Vehicle Equipment 44

7.2 Test Vehicle Guidance System 50

7.3 Photo - Instrumentation 50

7.4 Electronic Instrumentation and Data 55

7.5 Detailed Drawings 73

LIST OF FIGURES

Figure 2-1 – New rebar spliced with existing rebar for new bridge deck 4
Figure 2-2 – New bridge deck in place for Type 90 bridge rail 5
Figure 2-3 – Type 90 formwork in place for the concrete curb 5
Figure 2-4 – Type 90 concrete curb with cast-in anchor bolts 6
Figure 2-5 – Type 90 with the steel rail in place 6
Figure 2-6 – Test vehicle for Test 631 9
Figure 2-7 – Test vehicle after Test 631 9
Figure 2-8 – Right front corner of test vehicle after Test 631 10
Figure 2-9 – Floorboard deformation of test vehicle after Test 631 10
Figure 2-10 – Vehicle windshield before Test 631 11
Figure 2-11 – Vehicle windshield after Test 631 11
Figure 2-12 – Test article prior to Test 631 12
Figure 2-13 – Type 90 barrier face after Test 631 12
Figure 2-14 – Test 631 Data Summary Sheet 13
Figure 2-15 – Right side of test vehicle for Test 632 16
Figure 2-16 – Front of test vehicle for Test 632 16
Figure 2-17 – Type 90 test article prior to Test 632 17
Figure 2-18 – Front right corner of test vehicle after Test 632 17
Figure 2-19 – Right side of test vehicle after Test 632 18
Figure 2-20 – Type 90 bridge rail face after Test 632 18
Figure 2-21 – Barrier face scraping after Test 632 19
Figure 2-22 – Test 632 Data Summary Sheet 20
Figure 2-23 – Right side of test vehicle for Test 633 22
Figure 2-24 – Front right corner of test vehicle for Test 633 23
Figure 2-25 – Test article prior to Test 633 23
Figure 2-26 – Right side of test vehicle after Test 633 24
Figure 2-27 – Front right corner of test vehicle after Test 633 24
Figure 2-28 – Type 90 bridge rail face after Test 633 25
Figure 2-29 – Barrier face scraping after Test 633 25
Figure 2-30 – Test 633 Data Summary Sheet 26
Figure 2-31 – Test vehicle for Test 634 29
Figure 2-32 – Front right wheel of test vehicle for Test 634 29
Figure 2-33 – Test article prior to Test 634 30
Figure 2-34 – Right side of test vehicle after Test 634 30
Figure 2-35 – Post 3 Close-up after Test 634 31

Figure 2-36 – Post 4 Close-up after Test 634 31
Figure 2-37 – Type 90 barrier face after Test 634 32
Figure 2-38 – Ballast strapped down in cargo bed of test vehicle after Test 634 32
Figure 2-39 – Test 634 Data Summary Sheet 33
Figure 7-1 – Camera Locations 53
Figure 7-2 – Tape Switch Layout 54
Figure 7-3 – Vehicle Accelerometer Sign Convention 56
Figure 7-4 – Test 631 Vehicle Accelerations Vs Time 57
Figure 7-5 – Test 631 Vehicle Longitudinal Acceleration, Velocity, and Distance Vs Time 58
Figure 7-6 – Test 631 Vehicle Lateral Acceleration, Velocity, and Distance Vs Time 59
Figure 7-7 – Test 631 Vehicle Roll, Pitch, and Yaw Vs Time 60
Figure 7-8 – Test 631 Vehicle Acceleration Severity Index (ASI) Vs Time 61
Figure 7-9 – Test 632 Vehicle Accelerations Vs Time 62
Figure 7-10 – Test 632 Vehicle Longitudinal Acceleration, Velocity, and Distance Vs Time 63
Figure 7-11 – Test 632 Vehicle Lateral Acceleration, Velocity, and Distance Vs Time 64
Figure 7-12 – Test 632 Vehicle Roll, Pitch, and Yaw Vs Time 65
Figure 7-13 – Test 632 Vehicle Acceleration Severity Index (ASI) Vs Time 66
Figure 7-14 – Test 633 Vehicle Accelerations Vs Time 67
Figure 7-15 – Test 633 Vehicle Longitudinal Acceleration, Velocity, and Distance Vs Time 68
Figure 7-16 – Test 633 Vehicle Lateral Acceleration, Velocity, and Distance Vs Time 69
Figure 7-17 – Test 633 Vehicle Lateral Acceleration, Velocity, and Distance Vs Time 70
Figure 7-18 – Test 633 Vehicle Roll, Pitch, and Yaw Vs Time 71
Figure 7-19 – Test 633 Vehicle Acceleration Severity Index (ASI) Vs Time 72
Figure 7-20 – Type 90 Details 75
Figure 7-21 – Cross section and attachment detail for the Type 90 76

LIST OF TABLES

Table 1-1 – Intended Test Conditions 2
Table 2-1 – Test Vehicle Masses 7
Table 2-2 – Test 631 Assessment Summary 36
Table 2-3 – Test 632 Assessment Summary 37
Table 2-4 – Test 633 Assessment Summary 38
Table 2-5 – Test 634 Assessment Summary 39
Table 2-6 – Vehicle Trajectories and Speeds 40
Table 7-1 – Test 631 Vehicle Dimensions 46
Table 7-2 – Test 632 Vehicle Dimensions 47
Table 7-3 – Test 633 Vehicle Dimensions 48
Table 7-4 – Test 634 Vehicle Dimensions 49
Table 7-5 – Test 631 Camera Type and Location 50
Table 7-6 – Test 632 Camera Type and Location 51
Table 7-7 – Test 633 Camera Type and Location 51
Table 7-8 – Test 634 Camera Type and Location 52
Table 7-9 – Accelerometer Specifications 56

This page intentionally left blank.

1 INTRODUCTION

1.1 Problem

In recent years there has been an increasing emphasis on aesthetics in bridge rail design. During this time substantial effort has been afforded to develop bridge rails that are crashworthy, aesthetically acceptable and low-maintenance. The most recent aesthetic bridge rail designs developed by the Department include the TL-4 Type 80[1] and the pedestrian-friendly TL-2 Type 80SW[2]. Both the Type 80 and the Type 80SW are made of concrete and incorporate a 300-mm square rail element running the length of the bridge, elevated 280 mm above a curb. The Type 80/80SW bridge rail designs were proved to be crashworthy and low-maintenance but their "see-through" characteristics are relatively limited. To satisfy local agencies and the public, the Department must develop a bridge rail design for use on scenic highways that not only complies with Test Level 4 of the National Cooperative Highway Research Program (NCHRP) Report 350[3] for crashworthiness and is low-maintenance, but also is aesthetically pleasing and easy to see through.

1.2 Objective

To develop and crash test a low-maintenance, aesthetic, see-through bridge rail that will meet the NCHRP Report 350 Test Level 4 criteria for longitudinal barriers. Three tests will need to be successful in order to comply with Report 350: The first will involve a 2000-kg pickup truck impacting the barrier at 100 km/h with an impact angle of 25°, the second will be with an 820-kg small car traveling at 100 km/h and 20°, the last test will be an 8000-kg single unit van traveling at 80 km/h impacting at 15°.

1.3 Background and Significance of Work

In the early 1990's California crash tested the Type 115 bridge rail[4], which consists of two structural steel rails on structural steel posts that are mounted on the side of the bridge deck. Even though the design could structurally withstand impacts from pickup trucks at 100 km/h, there were some problems with front wheel snagging on the posts during the tests. The railing was consequently downgraded to a PL-1 level as defined in the AASHTO "Guide Specifications for Bridge Railings"[5] and is only recommended for use on narrow, low-volume, low-speed roads.

In the late 1990's the Type 80 and Type 80SW were developed to meet the district desires for a see-through concrete bridge rail that could be an alternative to the solid concrete parapet bridge rail, which was the current standard. These bridge rails were designed using the AASHTO "Guide Specifications for Bridge Railings" requirements, and were tested according to NCHRP Report 350. Utilizing a large gap between the curb and the rail, the early design of the Type 80 had acceptable see-through characteristics. However, crash testing demonstrated a potential for snagging during the small car test, leading to a redesign and a smaller gap. While

the final design of the Type 80 bridge rails proved to be both crashworthy and have good low-maintenance characteristics, concerns developed over the limited see-through potential.

In an effort to develop more acceptable bridge rail options, the Department has recently conducted an intensive study of aesthetic barriers that have been developed by others. After looking at all known rail designs that meet NCHRP Report 350 test criteria, several rails were identified that potentially offered improved see-through characteristics, particularly the Wyoming and Alaska rails. Nevertheless, each has its own disadvantages. These include unsuitability for use on a sidewalk, possible maintenance problems, and even some crash performance issues. The conclusion of the Department and the California Coastal Commission is that better aesthetic rail designs need to be developed to meet the needs of local communities in scenic areas.

1.4 Literature Search

A literature search using the TRIS, NTIS, and the Compendex Plus databases was conducted at the beginning of the project to find research reports or publications related to the objectives of this project. There were no reports that involved crash testing of bridge rails similar to the Type 90.

1.5 Scope

A representative section of the Type 90 bridge rail was constructed at the Caltrans Dynamic Test Facility in West Sacramento. Data were collected from four vehicular crash tests under the intended conditions shown in Table 1-1. These data were analyzed to determine if the Type 90 met the criteria set forth in NCHRP Report 350.

Table 1-1 – Intended Test Conditions

CALTRANS Test #	Barrier type	Mass (kg)	Speed (km/h)	Angle (deg)	NCHRP Report 350	
					Test Designation	Vehicle
631	Type 90	2000	100	25	4-11	2000P
632	Type 90	820	100	20	4-10	820C
633*	Type 90	820	100	20	4-10	820C
634	Type 90	8000	80	15	4-12	8000S

* Test 633 was added as a re-test of Test 632, in which the vehicle did not achieve the intended speed.

2 TECHNICAL DISCUSSION

2.1 Test Conditions - Crash Tests

2.1.1 Test Facilities

Each of the crash tests was conducted at the Caltrans Dynamic Test Facility in West Sacramento, California. The test area is a large, flat, asphalt concrete surface. There were no obstructions nearby except for a 2 m-high earth berm 40 m downstream from the bridge rail. An existing concrete anchor block (0.9 m deep by 1.1 m wide by 24.3 m long) at the North end of the test area was used as a simulated bridge deck for the construction of the Type 90 bridge rail.

2.1.2 Test Barrier Design and Construction

The Type 90 bridge rail was designed by the California Department of Transportation's Division of Engineering Services, with input from the Office of Landscape Architecture and the Division of Research and Innovation. Applied Research Associates, Inc. performed the finite element modeling to determine the optimal design. The bridge rail was designed with post spacing far apart so that good see-through characteristics could be achieved and far enough back to minimize hood snagging. The reverse slope and rail height were designed to minimize roll and maximize vehicle stability.

The bridge rail is a steel post and beam system atop a concrete curb. What is unusual is that the curb has a "reverse-slope" of 5.2°, raising the reaction point of impacting vehicles, which reduces roll. The concrete curb is 550 mm high, 500 mm wide at the top, and 450 mm wide at the base. The top of the steel rail is 925 mm above the travel way. The steel rail consists of 254x102x6.4-mm tube steel beams welded to 178x127x7.9-mm tube steel posts spaced 3 m apart. Two 6-mm thick steel plates are welded to the backside of the rail and the back of each post to add stiffness to the post-rail connection. The posts are welded to a base plate that is rigidly attached to the concrete curb with anchor rods cast into the curb. See Appendix 7.5 for design drawings.

Altman General Engineering was awarded the contract for construction of the Type 90 test section. The test section of bridge rail constructed at the Caltrans Dynamic Test Facility was 24.23 m long. Three expansion joints were placed 6.096 m apart in both the concrete curb and the steel rail to aid constructability as well as creating flexibility in choosing vehicle impact points for the crash testing.

First, the existing concrete bridge overhang was demolished, leaving the transverse #16 rebar in place for the new overhang. Where the rebar was not salvageable, new #16 rebar was lap spliced with the existing rebar or drilled and bonded into the anchor block with epoxy. All rebar had a yield-strength of 414 MPa. Additional #16 rebar was shaped and then tied to the existing/ new rebar (with the upper portion left exposed after the overhang pour) to anchor the (future) concrete curb to the new overhang.

The new overhang and concrete curb were constructed in separate concrete pours. After the pour for the overhang was completed, the rebar for the curb was lap-spliced to the exposed rebar. The curb was then poured, leaving the ends of all-thread anchor rods exposed to attach the steel posts and rail. Concrete from both pours had a minimum 28-day compressive strength of 28.8 MPa.

The steel rails were fabricated in approximately 6-m lengths to assist in ease of delivery and handling. Although not required, deflection joints were placed in the concrete curb at the same locations as the expansion joints in the steel rail to ensure adequate locations to test snagging potential during the crash tests. All structural steel including the posts, rail, backing plates, base plates, and anchor bolts and nut conformed to ASTM A36. See Figure 2-1 through Figure 2-5 for pictures of the barrier during various stages of construction.

Figure 2-1 – New rebar spliced with existing rebar for new bridge deck

Figure 2-2 – New bridge deck in place for Type 90 bridge rail

Figure 2-3 – Type 90 formwork in place for the concrete curb

Figure 2-4 – Type 90 concrete curb with cast-in anchor bolts

Figure 2-5 – Type 90 with the steel rail in place

2.1.3 Test Vehicles

The test vehicles complied with NCHRP Report 350. For all tests, the vehicles were in good condition, free of major body damage and were not missing any structural parts. All of the vehicles had standard equipment and front-mounted engines. The vehicle inertial masses for all tests except Test 632 were within acceptable limits (Table 2-1). It should be noted that the ballast CG height for the 8000S vehicle was lower than the limits specified by NCHRP Report 350 to keep the vehicle inertial mass CG height within Report 350 limits.

Table 2-1 – Test Vehicle Masses

Test No.	Vehicle	Ballast (kg)	Test Inertial (kg)
631	1997 Chevrolet 2500	0	2029
632	1992 Geo Metro 2-door hatchback	0	789
633	1994 Geo Metro 4-door hatchback	0	810
634	2000 GMC TopKick	2600	8056

The Chevrolet 2500 pickup truck and the GMC TopKick single-unit van were self-powered. The 1992 Geo Metro was a manual transmission and partially self-powered, meaning that it was push-started while in gear. It was then self-powered. The Chevrolet 2500 pickup and the Geo Metro used a speed control device to limit acceleration once the impact speed had been reached. The TopKick impact speed was achieved by running it under full acceleration for a pre-determined distance. The 1994 Metro was towed to the impact speed using a 2:1-mechanical advantage pulley system, with a speed control device installed in the tow vehicle. Remote braking was possible at any time during all tests via a wireless remote control. A short distance before the point of impact, the vehicles for tests 631, 632, and 634 were released from the guidance rail and the ignition system was deactivated. In Test 633, the vehicle was released first from the tow cable and second from the guidance rail a short distance from the point of impact. A detailed description of the test vehicle equipment and guidance system is contained in Appendices 7.1 and 7.2.

2.1.4 Data Acquisition System

The impact event of each crash test was recorded with 7 high-speed digital video cameras, one normal-speed digital camcorder, and one digital camera in sequence mode. The test vehicles and the barrier were photographed before and after impact with a normal-speed digital camcorder and a digital camera. Two sets of three orthogonal accelerometers were mounted at the center of gravity in the 2000P and 820C vehicles. Rate gyro transducers were

also placed at the center of gravity of the 2000P and 820C vehicles to measure the roll, pitch, and yaw. The data were used in calculating the occupant impact velocities, ridedown accelerations, and maximum vehicle rotation.

A 50th percentile, Hybrid III, anthropomorphic dummy was used in the 820C tests.

A high-performance data acquisition system manufactured by GMH Engineering (Data Brick) was used to record electronic data during Tests 631, 632, 633, and 634. Since accelerometers and rate gyros are not used on the 8000S vehicle, the Data Brick was used to record only event channel data such during Test 634. The digital data were analyzed with custom DADiSP workbooks.

2.2 Test Results - Crash Tests

A digital video report with edited footage from all tests has been compiled and is available for viewing.

2.2.1 Impact Description - Test 631

The impact angle was set at 25° by placement of the guide rail. The vehicle impacted the barrier at 25.2°. The impact speed of 100.5 km/h was obtained by optical switch data and confirmed by an average of two different speed traps located just upstream from the impact point. The intended impact point was 120 mm upstream of the joint between posts 2 and 3. The vehicle impacted the barrier approximately 50 mm farther upstream than intended (5.9 m from the upstream end of the barrier). The top right corner of the vehicle hood rode over the top of the steel rail to a maximum extension of 549 mm as measured from the traffic side of the barrier face. The front-left tire lost contact with the pavement at approximately 0.12 seconds. The right front of the vehicle continued to deform moderately as the vehicle began to yaw slightly left (negative) until the back right side of the vehicle contacted the barrier 0.19 seconds after the initial impact. At about 0.16 seconds after impact, the left rear tire lost contact with the pavement as the right side of the vehicle contacted the barrier. This secondary impact by the right side of the vehicle caused slight damage to the door and rear quarter section of the truck and also caused the vehicle to begin a positive roll into the barrier. During this secondary impact, the vehicle leaned into the rail with the left front corner reaching a maximum height of about 150 mm. At 0.31 seconds after initial impact the vehicle lost contact with the barrier. Through video analysis the exit speed and angle were determined to be 78.3 km/h and 9°, respectively.

The vehicle stayed in contact with the barrier for about 3.1 m. The rear of the vehicle lost contact with the barrier slightly upstream (approximately 0.5 m) from where the front of the vehicle lost contact with the barrier. The vehicle remained upright throughout and after the collision. The brakes were applied 0.76 s after initial contact with the rail and the stopping point was 45.7 m from the point of last contact with the rail.

Figure 2-6 through Figure 2-13 show the pre-test and post-test condition of the test vehicle and test article. Sequence photographs of the impact for Test 631 are shown on Figure 2-14 on page 13.

Figure 2-6 – Test vehicle for Test 631

Figure 2-7 – Test vehicle after Test 631

Figure 2-8 – Right front corner of test vehicle after Test 631

Figure 2-9 – Floorboard deformation of test vehicle after Test 631

Figure 2-10 – Vehicle windshield before Test 631

Figure 2-11 – Vehicle windshield after Test 631

Figure 2-12 – Test article prior to Test 631

Figure 2-13 – Type 90 barrier face after Test 631

Figure 2-14 – Test 631 Data Summary Sheet

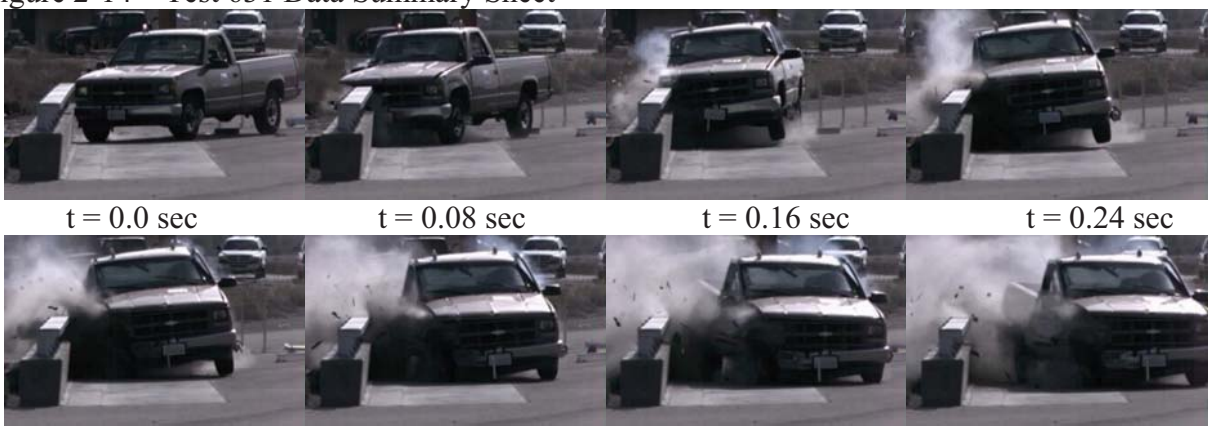

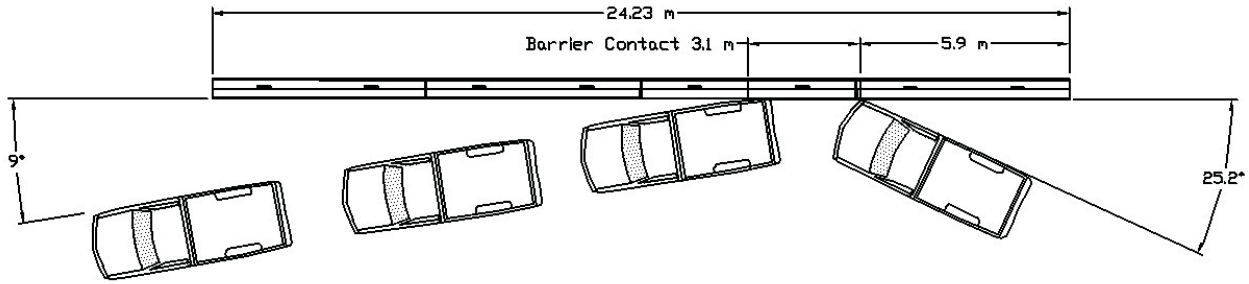

Test Barrier

Type:	Type 90 bridge rail
Length:	24.23 m, total length consisting of 4 segments of about 6 m each.

Test Date: November 1, 2006

Test Vehicle:

Model:	1997 Chevrolet 2500
Inertial Mass:	2029 kg

Test Dummy:

Type:	None used
Weight/ Position:	N/A

Impact/ Exit Conditions:

Impact / Exit Velocity:	100.5 km/h / 78.3 km/h
Impact / Exit Angle:	25.2° / 9°
Impact Severity:	141.9 kJ

Test Data:

Occ. Impact Velocity (Long / Lat):	6.20 m/s / 8.17 m/s
Ridedown Acceleration (Long / Lat):	-7.39 g / -10.54 g
ASI	1.77
Exterior: VDS[6]/CDC[7]	FR-5, RD-6/02RFEW9
Interior: OCDI[3]	RF0210001
Max. Roll/Pitch/Yaw Angles:	-7.41° / 7.01° / 39.71°

Barrier Damage: Maximum dynamic deflection in steel rail of 38 mm, superficial concrete spalling, and no permanent lateral deflection.

2.2.2 Vehicle Damage - Test 631

The right front corner of the vehicle was moderately damaged in the initial impact with the barrier. The right front fender, hood, bumper, headlamp area, grille, and suspension components were all affected. The passenger side doorframe was deformed outward but the door remained latched. The right front tire was also ruptured. The steel rail caused denting along the entire length of the passenger side as the vehicle continued to contact the barrier after the initial impact. The right front tire was pushed rearward and slightly into the passenger side foot well area. The maximum amount of passenger compartment deformation was 124 mm[1], which occurred in the floorboard[2]. The entire windshield spider-cracked but did not separate or enter the occupant compartment. However, this cracking was not caused entirely by the test. The windshield was inadvertently damaged (see Figure 2-10) on the impact side shortly before the test was run and it was decided that the damage was not significant enough to warrant postponing the test. Post-crash photos show the initial crack to be the weak point and the source of future cracking.

2.2.3 Barrier Damage - Test 631

There was only minimal permanent damage to the barrier during Test 631. The steel rail scraped a small amount of paint off the vehicle along the length of contact. The vehicle caused some minor concrete spalling at the downstream vertical face of the expansion joint near the impact point and along the top of the curb for approximately 1.5 m. No rebar was exposed so there was no structural damage to warrant immediate repair. For aesthetic reasons and because the concrete cover over the rebar has been compromised, the damage should be repaired by maintenance crews.

There was no permanent deflection in the concrete curb or steel rail. As the vehicle impacted the barrier, the dynamic deflection in the steel rail was 38 mm, as measured from the overhead camera.

---

[1] It was discovered after the test that there was significant corrosion of some non-structural components of the front grill above the bumper, which may have adversely affected the occupant compartment deformation.

[2] NCHRP Report 350 does not specify a maximum allowable limit for occupant compartment deformation. However, the Federal Highway Administration has established an informal limit of 150 mm that is generally accepted by the roadside safety community.

2.2.4 Impact Description - Test 632[1]

(Although test 632 did not achieve acceptable impact speed, it is reported here as supplemental impact data.)

The impact point was intended to be 160 mm downstream of the midpoint between posts 3 and 4. The impact angle was set at 20° by placement of the guide rail. The vehicle deviated slightly from this angle prior to impact, achieving a 19.5° impact angle. The impact speed of 76.5 km/h, well below the desired impact speed of 100 km/hr[2], was obtained by optical switch data and confirmed (within 0.1 km/h) by an average of two different speed traps located just upstream from the impact point. The test vehicle impacted the barrier approximately 420 mm downstream of the intended impact point (9.6 m from the upstream end). The front right corner of the vehicle hood rode over the top of the concrete curb to a maximum extension of 112 mm as measured from the traffic side of the curb face. The right front and right side of the vehicle crushed as the vehicle began to yaw sharply left (negative). The sharp left yaw and right side deformation continued until about 0.18 s when the rear of the vehicle contacted the rail. The vehicle lost contact with the barrier at about 0.264 s. Through video analysis the exit speed and angle were determined to be 61 km/h and 8°, respectively. The timing of the application of the brakes was indeterminable[3] The vehicle stayed in contact with the barrier for about 2.7 m. The vehicle remained upright throughout and after the collision, coming to rest 29.1 m from the point of last contact with the rail.

See Figure 2-15 through Figure 2-21 for the pre-test and post-test condition of the test vehicle and test article. Sequence photographs of the impact for Test 632 are shown on Figure 2-22 on the Data Summary Sheet (page 20).

---

[1] The vehicle used in Test 632 had a test inertial mass of 789 kg. The vehicle impact speed was 76.5 km/hr. Both are outside the limits given in NCHRP Report 350 for the 820C test vehicle and Test 2-10. The impact angle was 19.5°, which is within the limits given in NCHRP Report 350 for Test 2-10. The impact severity was 19.8 kJ and within the limits of Report 350 for Test 2-10. Because the vehicle mass and impact speed were only slightly outside the Report 350 limits and because the impact severity was near the upper Report limit, the test should be considered as a valid TL-2 test.

[2] The vehicle did not achieve the desired impact speed because the attempted high-speed push start failed leaving the vehicle to coast into the barrier. It is unknown exactly why the vehicle failed to start but the most plausible explanation is that the transmission slipped out of gear during the push.

[3] The timing of the brake application could not be determined because the vehicle-mounted brake flash never fired and the high-speed video did not show any evidence of brake application. However, since the high-speed video did not show any slowing of the front tires in the field of view, it was surmised that the brakes were applied well after the vehicle had lost contact with the barrier

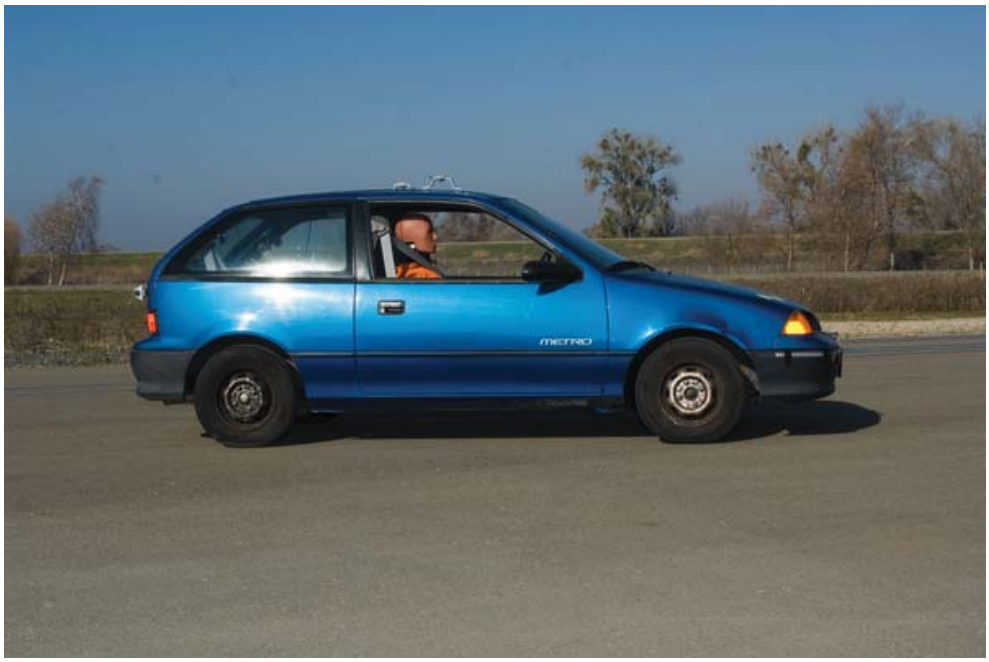

Figure 2-15 – Right side of test vehicle for Test 632

Figure 2-16 – Front of test vehicle for Test 632

Figure 2-17 – Type 90 test article prior to Test 632

Figure 2-18 – Front right corner of test vehicle after Test 632

Figure 2-19 – Right side of test vehicle after Test 632

Figure 2-20 – Type 90 bridge rail face after Test 632

Figure 2-21 – Barrier face scraping after Test 632

Figure 2-22 – Test 632 Data Summary Sheet

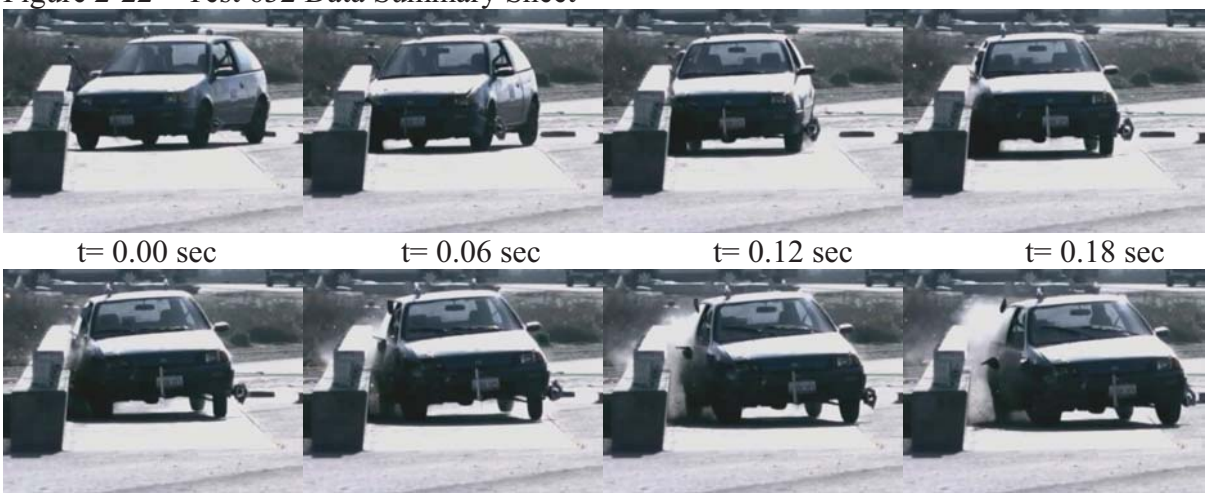

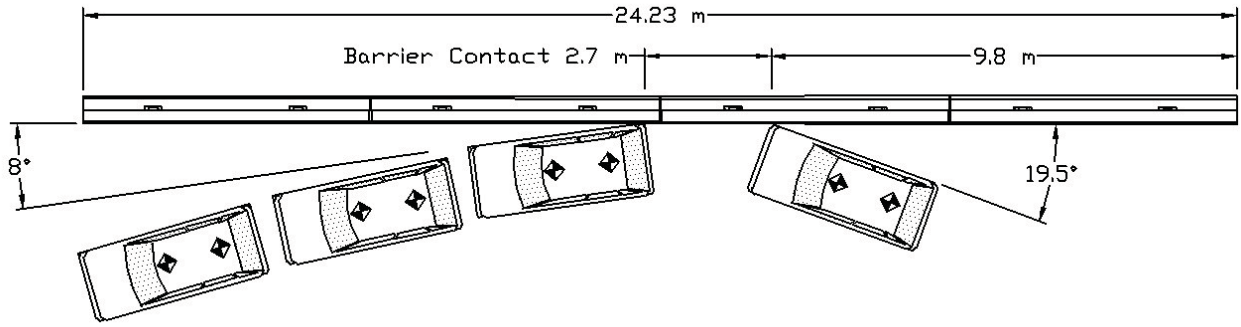

Test Barrier

Type: Type 90 bridge rail

Length: 24.23 m, total length consisting of 4 segments of about 6 m each.

Test Date: January 10, 2007

Test Vehicle:

Model: 1992 Geo Metro 2-door Hatchback

Inertial Mass: 789 kg

Test Dummy:

Type: Hybrid III 50th %

Weight / Position: 75 kg / Front Passenger

Impact/ Exit Conditions:

Impact / Exit Velocity: 76.5 km/h / 61.0 km/h

Impact / Exit Angle: 19.5° / 8°

Impact Severity: 19.8 kJ

Test Data:

Occ. Impact Velocity (Long / Lat): 3.29 m/s / 5.72 m/s

Ridedown Acceleration (Long / Lat): -2.68 g / -9.95 g

ASI 1.18

Exterior: VDS(6)/CDC(7) FR-2, RD-6/02RFEW9

Interior: OCDI(3) RF0000000

Max. Roll/Pitch/Yaw Angles: 2.58° / 1.20° / -31.65°

Barrier Damage: No dynamic deflection in steel rail, minor superficial concrete spalling.

2.2.5 Vehicle Damage - Test 632

The right front corner of the vehicle was moderately damaged. The right front bumper and right fender were pushed rearward. The right front tire and wheel assembly were pushed rearward about 146 mm into wheel well, deforming it. The entire right side of the vehicle was moderately damaged. There was no significant passenger compartment or floorboard deformation. The passenger-side mirror was broken off.

2.2.6 Barrier Damage - Test 632

There was essentially no permanent damage to the barrier during Test 632. The steel rail scraped a small amount of paint off the vehicle along the length of contact. There was a negligible amount of concrete spalling on the concrete curb. There would be no need for repair by a maintenance crews.

2.2.7 Dummy Response - Test 632

The dummy was lap and shoulder belted. The dummy remained upright and secure throughout the test, though the head protruded through the passenger window but did not strike the barrier. While the dummy's head was protruding through the window, it is inconclusive whether or not the head was struck by the passenger-side mirror that had broken off from the mirror enclosure. The final resting position of the dummy was upright in the passenger seat.

2.2.8 Impact Description - Test 633

The impact point was intended to be 160 mm downstream of the midpoint between posts 3 and 4. The impact angle was set at 20° by placement of the guide rail and the vehicle did not deviate from this angle prior to impact. The recorded impact speed of 99.2 km/h was obtained by optical switch data and confirmed by an average of two different speed traps located just upstream from the impact point. The test vehicle impacted the barrier 460 mm downstream of the intended impact point (9.2 m from the upstream end). The front right corner of the vehicle hood rode over the top of the 550-mm high concrete curb to a maximum extension of 170 mm as measured from the traffic side of the curb face. The right front and right side of the vehicle continued to deform as the vehicle began to yaw sharply left. The sharp left yaw and right side deformation continued until about 0.13 s after impact when the rear of the vehicle contacted the rail. The vehicle lost contact with the barrier at about 0.19 s. Through video analysis the exit speed and angle were determined to be 83.1 km/h and 8°, respectively. The timing of the application of the brakes was impossible to determine because the vehicle-mounted brake flash never fired and the high-speed video did not show any evidence of brake application. However, the high-speed video did not show any slowing of the front tires in the field of view either, indicating that the brakes were applied well after the vehicle had lost contact with the barrier.

The vehicle stayed in contact with the barrier for about 2.7 m. The vehicle remained upright throughout and after the collision. The vehicle came to rest 47.9 m from the point of last contact with the rail.

Figure 2-23 through Figure 2-29 show the pre-test and post-test condition of the test vehicle and test article. Sequence photographs of the impact for Test 633 are shown on Figure 2-30 on the Data Summary Sheet on page 26.

Figure 2-23 – Right side of test vehicle for Test 633

Figure 2-24 – Front right corner of test vehicle for Test 633

Figure 2-25 – Test article prior to Test 633

Figure 2-26 – Right side of test vehicle after Test 633

Figure 2-27 – Front right corner of test vehicle after Test 633

Figure 2-28 – Type 90 bridge rail face after Test 633

Figure 2-29 – Barrier face scraping after Test 633

Figure 2-30 – Test 633 Data Summary Sheet

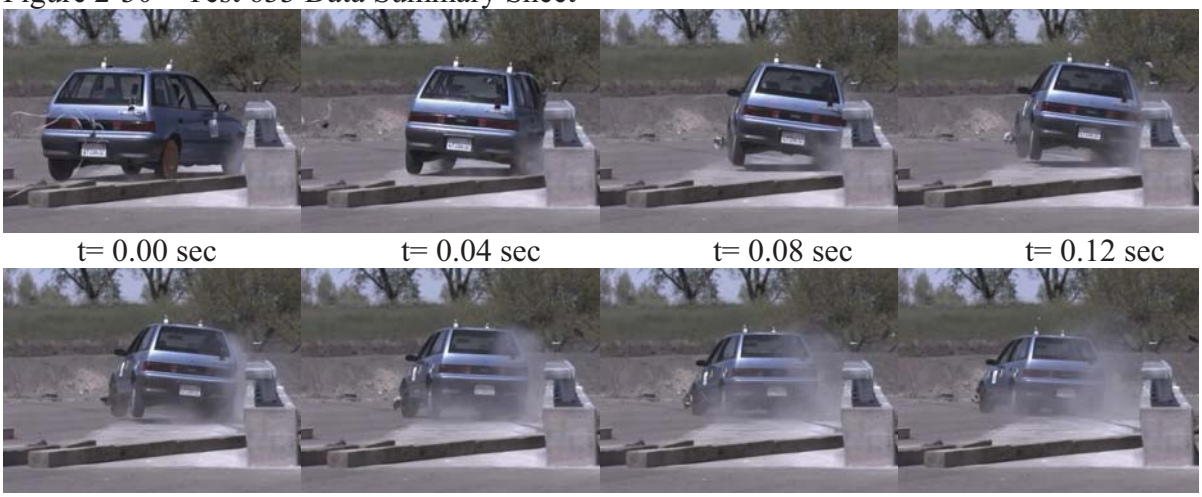

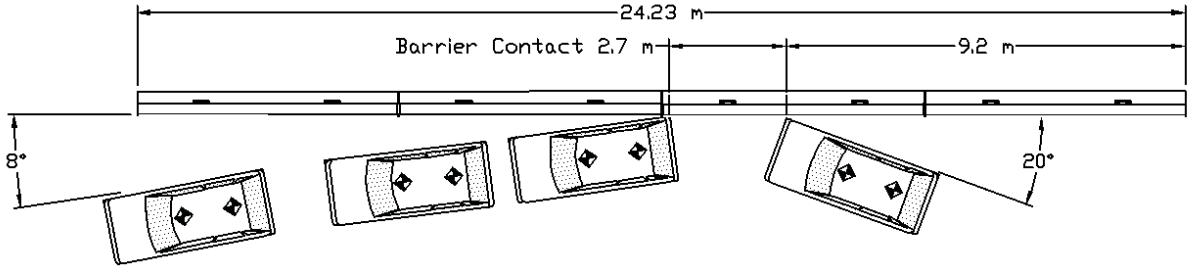

Test Barrier

Type: Type 90 bridge rail

Length: 24.23 m, total length consisting of 4 segments of about 6 m each.

Test Date: March 29, 2007

Test Vehicle:

Model: 1994 Geo Metro 4-door Hatchback

Inertial Mass: 810 kg

Test Dummy:

Type: Hybrid III 50th %

Weight / Position: 75 kg / Front Passenger

Impact/ Exit Conditions:

Impact / Exit Velocity: 99.2 km/h / 83.1 km/h

Impact / Exit Angle: 20.0° / 8°

Impact Severity: 36.0 kJ

Test Data:

Occ. Impact Velocity (Long / Lat): 3.89 m/s / 6.33 m/s

Ridedown Acceleration (Long / Lat): -4.59 g / -14.77 g

ASI 1.70

Exterior: VDS(6)/CDC(7) FR-4, RD-3/02RFEW9

Interior: OCDI(3) RF0001000

Max. Roll/Pitch/Yaw Angles: 6.35° / -2.65° / -33.61°

Barrier Damage: No dynamic deflection in steel rail, minor superficial concrete spalling.

2.2.9 Vehicle Damage - Test 633

The right front corner of the vehicle was moderately damaged in the initial impact with the concrete curb. The right front bumper and right fender were pushed rearward. The right front tire and wheel assembly was pushed rearward about 130 mm into wheel well, deforming it. The entire right side of the vehicle was moderately damaged. There was no significant passenger compartment or floorboard deformation.

2.2.10 Barrier Damage - Test 633

As in Test 632, there was essentially no permanent damage to the barrier during Test 633. The steel rail scraped a small amount of paint off the vehicle along the length of contact. There was a negligible amount of concrete spalling on the concrete curb. There would be no need for repair by a maintenance crews.

2.2.11 Dummy Response - Test 633

The dummy was lap and shoulder belted. The dummy remained upright and secure throughout the test, though the head protruded through the passenger window but did not strike the barrier. The final resting position of the dummy was upright in the passenger seat.

2.2.12 Impact Description - Test 634

The impact angle was set at 15° by placement of the guide rail. The vehicle veered slightly toward the barrier after detaching from the guide arm and impacted the barrier at 16°. The impact speed of 78.3 km/h was measured by optical switch data and confirmed (within 0.2 km/h) by averaging the results of two different speed traps located just upstream from the impact point. The intended impact point was 89 mm upstream of the centerline of post 3 and was chosen to maximize the load imposed on a post. The test vehicle impacted the barrier 120 mm downstream of the intended impact point (7.52 m from the upstream end). The left front tire lost contact with the pavement at approximately 0.128 seconds after impact. The front right corner of the vehicle hood rode over the top of the steel rail to a maximum extension of 500 mm as measured from the traffic side of the barrier face at 0.138 s after impact. The right front of the vehicle continued to deform as the vehicle began yawing to the left. This continued until the vehicle became parallel with the barrier about 0.34 seconds after the initial impact. At this point the roll of the cab measured from the downstream camera was about 14.9° right. The roll angle of the cargo box measured from the upstream camera was 9.6° right. At 0.348 seconds after the initial impact, the dynamic lateral deflection of the steel rail reached its maximum of less than 50 mm. The roll angle of the cab reached a maximum of 25.4° at approximately 0.536 seconds after initial impact. The roll angle of the cargo box reached a maximum of 18.7° at approximately 0.618 seconds after the initial impact. From the high-speed video the vehicle

lost contact with the rail approximately 1.31 seconds after impact. Through video analysis the exit angle was determined to be approximately 5°. However, there was not enough information to accurately determine the exit speed. Because the vehicle-mounted brake flash never fired, the video record could not be used to determine the exact time of brake application. However, an electronic data channel that records certain "events", including brake application, showed that the brakes were applied approximately 0.56 seconds before the vehicle lost contact with the barrier[1]. The impact of the right front tire with the barrier caused failure of several suspension components, including the right-side U-bolts which secure the axle to the leaf springs as well the end of the leaf spring on the right side. This allowed the front axle to begin to rotate about its connection point on the left side of the vehicle. The vehicle never fully lost contact with the ground and was able to right itself as it continued into the run-out area. The vehicle stayed in contact with the barrier for about 12.2 m, with the rear of the vehicle making contact with the barrier approximately 0.75 m upstream of the point of initial impact by the front of the vehicle. The vehicle remained upright throughout and after the collision. The vehicle came to rest 32.6 m from the point of last contact with the rail.

The vehicle exit speed was estimated to be 61.1 km/h ±11 km/h. This speed was estimated using the pan camera footage because it was not possible to determine the exit speed from any other camera angle.

See Figure 2-31 through Figure 2-38 for the pre- and post-test condition of the test vehicle and test article.

The 2041 kg of ballast was comprised of two separate plywood boxes and the associated mounting hardware all bolted and strapped down to the cargo floor. The boxes were constrained by 150-mm angle iron. The sandbags were held down by 100-mm nylon straps as shown in Figure 2-38. The sandbags shifted slightly, but did not brake lose during the test.

Sequence photographs of the impact for Test 634 are shown on Figure 2-39 on the Data Summary Sheet (page 33).

[1] Although the brakes were applied before the vehicle lost contact with the barrier, it was concluded that there was little or no effect on the outcome of the test. This conclusion was reached based on several underlying conditions: 1) The vehicle had already been redirected without rollover, 2) The vehicle had already reached max roll and was in the process of righting itself, 3) Only one tire was in contact with the ground when the brakes were applied, so the early application of the brakes did not significantly slow the vehicle down.

Figure 2-31 – Test vehicle for Test 634

Figure 2-32 – Front right wheel of test vehicle for Test 634

Figure 2-33 – Test article prior to Test 634

Figure 2-34 – Right side of test vehicle after Test 634

Figure 2-35 – Post 3 Close-up after Test 634

Figure 2-36 – Post 4 Close-up after Test 634

Figure 2-37 – Type 90 barrier face after Test 634

Figure 2-38 – Ballast strapped down in cargo bed of test vehicle after Test 634

Figure 2-39 – Test 634 Data Summary Sheet

t= 0.00 sec t= 0.16 sec t= 0.32 sec t= 0.48 sec

t= 0.64 sec t= 0.80 sec t= 0.96 sec t= 1.12 sec

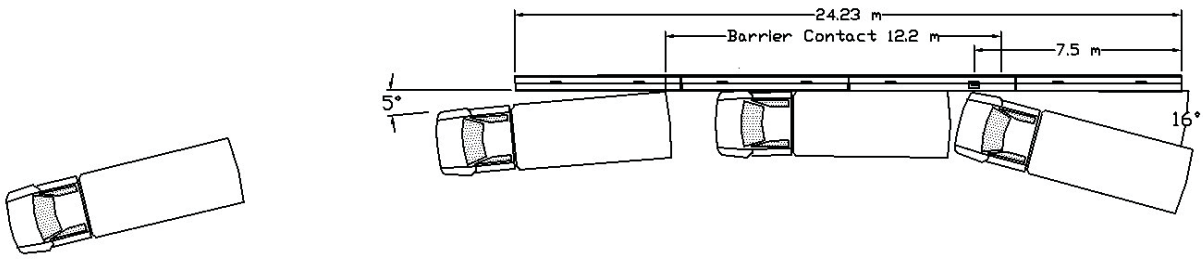

Test Barrier

Type: Type 90 bridge rail

Length: 24.23 m, total length consisting of 4 segments of about 6 m each.

Test Date: July 18, 2007

Test Vehicle:

Model: 2000 GMC Topkick 6500

Inertial Mass: 8056 kg

Test Dummy:

Type: None used

Impact/ Exit Conditions:

Impact / Exit Velocity: 78.3 km/h / 61.1±11 km/h

Impact / Exit Angle: 16.0° / 5°

Impact Severity: 144.8 kJ

Test Data:

Occ. Impact Velocity (Long / Lat): Not Measured

Ridedown Acceleration (Long / Lat): Not Measured

ASI Not Measured

Exterior: VDS[6]/CDC[7] FR-4, RD-2/02RFEW5

Interior: OCDI[3] RF0000000

Max. Roll/Pitch/Yaw Angles: Not Measured

Barrier Damage: Maximum dynamic deflection in steel rail of <50 mm and <15 mm of permanent lateral deflection, moderate concrete spalling from vehicle lug nuts scraping, and <15 mm of permanent lateral deflection.

2.2.13 Vehicle Damage - Test 634

The impact of the right front tire with the barrier caused failure of several suspension components, including the right-side U-bolts which secure the axle to the leaf springs as well the end of the leaf spring on the right side. The axel shifted rearward 650 mm on the impact side and forward 160 mm on the driver side. When the front passenger side wheel was driven rearward, it crushed the battery box, the OEM fuel tank, the fender, and the door. Additionally, the front passenger side shock mounting bolt was sheared, a wheel stud on the front passenger tire sheared off, the passenger side of the front bumper was bent rearward, the rear passenger side wheel was damaged, and the bottom of the cargo bed was scraped at support locations from scraping the top of the steel rail. The passenger-side door remained latched even though the battery box was pushed upward into the bottom of the door, causing significant deformation. There was no significant passenger compartment or floorboard deformation. Additionally, all tires were still fully inflated after the test, despite the impact-side rims being bent and/or scraped during impact.

2.2.14 Barrier Damage - Test 634

Unlike the previous tests, there was some permanent damage to the barrier. The vehicle lug nuts and rims caused gouging and spalling of the top of the concrete curb from just upstream of the initial impact point to where the rear tire lost contact with the rail, about 4.5 meter downstream of the impact point. At posts 3 and 4 the spalling extended to the front edge of the post base plate. As in Test 631, the gouging and spalling were superficial and not structural as evidenced by the lack of exposed rebar[1]. More significantly, there was minor weld cracking at Post 3 (the post nearest the impact location) where the post was attached to the base plate. The welds were cracked approximately 6 mm on each side of all four corners, with a 0.05-mm gap at the crack locations. The center of the base plate was also bent upwards on the traffic and upstream sides, with the maximum deformation of 5 mm occurring on the traffic side. Additionally, the steel rail had a permanent lateral deflection of less than 15 mm. Because the weld cracking was minor, it is unlikely that damage to the steel rail would pose a safety concern to other vehicles before maintenance crews could repair the damage.

[1] The damage to the concrete, although not aesthetically pleasing, would not likely have an adverse affect on the crashworthiness of the barrier.

2.3 Discussion of Test Results - Crash Tests

2.3.1 General - Evaluation Methods (Tests 631, 632, 633 and 634)

NCHRP Report 350[1] stipulates that crash test performance be assessed according to three evaluation factors: 1) Structural Adequacy, 2) Occupant Risk, and 3) Vehicle Trajectory. These evaluation factors are further defined by evaluation criteria and are shown for each test designation in Table 3.1 of NCHRP Report 350. Test 631 of this report has a NCHRP Report 350 test designation of 4-11, for Tests 632 and 633 it is 4-10, and for Test 634 it is 4-12. The evaluation criteria are detailed in Chapter 5 of NCHRP Report 350 and are summarized in Table 5.1 of that same report.

2.3.2 Structural Adequacy

The structural adequacy of the Type 90 bridge rail is acceptable. There was negligible movement of the rail during any of the tests. During the time of contact between the test vehicles and the barriers there were minor amounts of scraping and gouging. A detailed assessment summary of structural adequacy is shown in Table 2-2 through Table 2-5.

Table 2-2 – Test 631 Assessment Summary

Test No. 631 (NCHRP Report 350, TL 4-11)
Date November 1, 2006
Test agency California Dept. of Transportation

Evaluation Criteria	Test Results	Assessment
Structural Adequacy		
A. Test article should contain and redirect the vehicle; the vehicle should not penetrate, underride, or override the installation although controlled lateral deflection of the article is acceptable.	The vehicle was contained and smoothly redirected	pass
Occupant Risk		
D. Detached elements, fragments or other debris from the test article should not penetrate or show potential for penetrating the occupant compartment, or present an undue hazard to other traffic, pedestrians, or personnel in a work zone. Deformation of, or intrusions into, the occupant compartment that could cause serious injuries should not be permitted.	Only moderate amounts of scraping and gouging were created during impact. There was no significant debris from the vehicle or the barrier.	pass
	The maximum floorboard deformation was 124 mm. (<150mm)	pass
	There was moderate occupant compartment deformation.	pass
F. The vehicle should remain upright during and after collision although moderate roll, pitching, and yawing are acceptable.	The observed levels of roll, pitch, and yaw were deemed acceptable.	pass
Vehicle Trajectory		
K. After collision it is preferable that the vehicle's trajectory not intrude into adjacent traffic lanes.	The vehicle maintained a relatively straight course after exiting the barrier.	pass
L. The occupant impact velocity in the longitudinal direction should not exceed 12 m/sec and the occupant ridedown acceleration in the longitudinal direction should not exceed 20 *g*.	Long. Occ. Impact Vel. = 6.20 m/s Long. Occ. Ridedown = -7.39 g	pass
M. The exit angle from the test article preferably should be less that 60 percent of the test impact angle, measured at time of vehicle loss of contact with test device."	Exit angle = 9°, 36% of the impact angle.	pass

Table 2-3 – Test 632 Assessment Summary
(Supplemental)

Test No. 632 (NCHRP Report 350, TL 4-10)
Date January 10, 2007
Test agency California Dept. of Transportation

Evaluation Criteria	Test Results	Assessment
Structural Adequacy		
A. Test article should contain and redirect the vehicle; the vehicle should not penetrate, underride, or override the installation although controlled lateral deflection of the article is acceptable.	The vehicle was contained and smoothly redirected	pass
Occupant Risk		
D. Detached elements, fragments or other debris from the test article should not penetrate or show potential for penetrating the occupant compartment, or present an undue hazard to other traffic, pedestrians, or personnel in a work zone. Deformation of, or intrusions into, the occupant compartment that could cause serious injuries should not be permitted.	Only moderate amounts of scraping and gouging were created during impact. There was no significant debris from the vehicle.	pass
	The amount of floorboard deformation was too low to measure.	pass
	There was no significant occupant compartment deformation.	pass
F. The vehicle should remain upright during and after collision although moderate roll, pitching, and yawing are acceptable.	The observed levels of roll, pitch, and yaw were deemed acceptable.	pass
H. Occupant Impact Velocities (OIV) in both longitudinal and lateral directions should be less than the following: 9 m/s (preferred) or 12 m/s (maximum).	Long. OIV = 3.29 m/s Lateral OIV = 5.72 m/s	pass
I. Occupant ridedown accelerations in both the longitudinal and lateral directions should be less than the following: 15 g's (preferred) or 20 g's (maximum)	Long. Ridedown accel. = -2.68 g Lateral Ridedown accel. = -9.95 g	pass
Vehicle Trajectory		
K. After collision it is preferable that the vehicle's trajectory not intrude into adjacent traffic lanes.	The vehicle maintained a relatively straight course after exiting the barrier.	pass
M. The exit angle from the test article preferably should be less that 60 percent of the test impact angle, measured at time of vehicle loss of contact with test device."	Exit angle = 8°, 41% of the impact angle.	pass

Table 2-4 – Test 633 Assessment Summary

Test No. 633 (NCHRP Report 350, TL 4-10)
Date March 24, 2007
Test agency California Dept. of Transportation

Evaluation Criteria	Test Results	Assessment
Structural Adequacy		
A. Test article should contain and redirect the vehicle; the vehicle should not penetrate, underride, or override the installation although controlled lateral deflection of the article is acceptable.	The vehicle was contained and smoothly redirected	pass
Occupant Risk		
D. Detached elements, fragments or other debris from the test article should not penetrate or show potential for penetrating the occupant compartment, or present an undue hazard to other traffic, pedestrians, or personnel in a work zone. Deformation of, or intrusions into, the occupant compartment that could cause serious injuries should not be permitted.	Only moderate amounts of scraping and gouging were created during impact. There was no significant debris from the vehicle.	pass
	The amount of floorboard deformation was 20 mm (< 150 mm).	pass
	There was no significant occupant compartment deformation (20 mm).	pass
F. The vehicle should remain upright during and after collision although moderate roll, pitching, and yawing are acceptable.	The vehicle was stable. The observed levels of roll, pitch, and yaw were low.	pass
H. Occupant Impact Velocities (OIV) in both longitudinal and lateral directions should be less than the following: 9 m/s (preferred) or 12 m/s (maximum).	Long. OIV = 3.89 m/s Lateral OIV = 6.33 m/s	pass
I. Occupant ridedown accelerations in both the longitudinal and lateral directions should be less than the following: 15 g's (preferred) or 20 g's (maximum)	Long. Ridedown accel. = -4.59 g Lateral Ridedown accel. = -14.77 g	pass
Vehicle Trajectory		
K. After collision it is preferable that the vehicle's trajectory not intrude into adjacent traffic lanes.	The vehicle maintained a relatively straight course after exiting the barrier.	pass
M. The exit angle from the test article preferably should be less that 60 percent of the test impact angle, measured at time of vehicle loss of contact with test device."	Exit angle = 8°, 40% of the impact angle.	pass

Table 2-5 – Test 634 Assessment Summary

Test No. 634 (NCHRP Report 350, TL 4-12)
Date July 18, 2007
Test agency California Dept. of Transportation

Evaluation Criteria	Test Results	Assessment
Structural Adequacy		
A. Test article should contain and redirect the vehicle; the vehicle should not penetrate, underride, or override the installation although controlled lateral deflection of the article is acceptable	The vehicle was contained and smoothly redirected	pass
Occupant Risk		
D. Detached elements, fragments or other debris from the test article should not penetrate or show potential for penetrating the occupant compartment, or present an undue hazard to other traffic, pedestrians, or personnel in a work zone. Deformation of, or intrusions into, the occupant compartment that could cause serious injuries should not be permitted.	There was not any significant debris from the test article and negligible deformation of the occupant compartment.	pass
G. It is preferable, although not essential, that the vehicle remain upright during and after collision.	The vehicle remained upright	pass
Vehicle Trajectory		
K. After collision it is preferable that the vehicle's trajectory not intrude into adjacent traffic lanes	The vehicle maintained a relatively straight course after exiting the barrier	pass
M. The exit angle from the test article preferably should be less that 60 percent of the test impact angle, measured at time of vehicle loss of contact with test device."	Exit angle =5°, 30% of the impact angle.	pass

2.3.3 Occupant Risk

The occupant risk for the Type 90 is also acceptable. None of the tests indicated potential for material from the barrier to penetrate the occupant compartment of the vehicles. All of the calculated occupant ridedown accelerations and occupant impact velocities were within the "preferred" range. Please refer to Table 2-2 through Table 2-5.

2.3.4 Vehicle Trajectory

The post-impact vehicle trajectory is also acceptable for the Type 90. The detailed assessment summary of vehicle trajectories may be seen in Table 2-2 through Table 2-5.

Table 2-6 summarizes the impact and exit trajectories and speeds of all test vehicles. Because the exit speed of Test 634 had to be estimated with a pan camera view, there is a large degree of uncertainty in the exit speed. Therefore, the change in speed for Test 634 is reported as a range.

Table 2-6 – Vehicle Trajectories and Speeds

Test Number	Impact Angle (deg)	60% of Impact Angle (deg)	Exit Angle (deg)	Impact Speed, V_i (km/h)	Exit Speed, V_e (km/h)	Speed Change V_i - V_e (km/h)
631	25.2	15.1	9.3	100.5	78.3	22.2
632	19.5	11.7	7.8	76.5	61.0	15.5
633	20.0	12	3.4	99.2	83.1	16.1
634	16.0	9.6	2.6	78.3	61.1±11	6.1-28.2

3 CONCLUSION

Based on the testing of the Type 90 discussed in this report, the following conclusions can be drawn:

1. The Type 90 can successfully contain and redirect a 2000-kg pickup truck impacting at 25° and 100 km/h. (There was moderate occupant compartment deformation, mainly in the cab floorboard area. This deformation was judged to be insufficient to cause serious injury to vehicle occupants).

2. The Type 90 can successfully contain and redirect an 820-kg small car impacting at 20° and 100 km/h.

3. The Type 90 can successfully contain and redirect an 8000-kg, single unit, van-bodied truck impacting at 15° and 80 km/h.

4. Damage to the Type 90 in accidents similar to the tests conducted for this project will result in small to moderate amounts of scraping and gouging of the rail. Therefore, the majority of impacts into the rail will not require urgent repairs.

5. The Type 90 meets the criteria set in the National Cooperative Highway Research Program's Report 350 "Recommended Procedures for the Safety Performance Evaluation of Highway Features" under Test Level 4 for longitudinal barriers.

With the exception of Test 632, all impact angles, impact speeds, and impact severities were within Report 350 limits.

In Test 631 (pickup truck) and Test 633 (small car) all of the barrier structural adequacy, occupant risk, and vehicle trajectory criteria, as outlined in NCHRP Report 350, were within acceptable limits. The exit angles were small enough that the vehicle would not impose undue risks to other motorists. No debris was scattered in such a way that it would create hazards to other motorists. The vehicles were safely contained and redirected by the barrier and remained upright throughout the test.

In Test 634 (large truck) all of the barrier structural adequacy and vehicle trajectory criteria, as outlined in NCHRP Report 350, were within acceptable limits. None of the detached pieces of the vehicle penetrated or even showed the possibility of penetrating the passenger compartment of the test vehicle.

None of the damage done to the barrier during Tests 631, 632, and 633 would pose safety concerns for other vehicles which may impact the same location before repairs could be accomplished by maintenance crews. It is unlikely that any damage done to the barrier during Test 634 would pose significant safety concerns for other vehicles.

4 RECOMMENDATION

The Type 90 is recommended for use as new or retrofit bridge railing on high-speed highways at Test Level 4.

5 IMPLEMENTATION

The Office of Structures Design will be responsible for the preparation of standard plans and specifications for the Type 90, with technical support from Materials Engineering and Testing Services, Division of Research and Innovation and the Traffic Operations Program.

6 REFERENCES

1. Meline, Robert, Jewell, John, and Peter, Rich, "Vehicle Crash Tests of Type 80 Bridge Rail", California Department of Transportation, Report No. FHWA/CA/ESC-98/06 Part 3, March 1999.

2. Meline, Robert, Jewell, John, and Peter, Rich, "Vehicle Crash Tests of Type 80SW Bridge Rail", California Department of Transportation, Report No. FHWA/CA/ESC-98/06, August 1998 revised August 1999.

3. "Recommended Procedures for the Safety Performance Evaluation of Highway Features", Transportation Research Board, National Cooperative Highway Research Program Report 350, 1993.

4. Jewell, John, et al., "Vehicle Crash Tests of Steel Bridge Barrier Rail Systems for Use on Secondary Highways", California Department of Transportation, Report No. FHWA/CA/TL-93/01, March 1993.

5. "Guide Specifications For Bridge Railings", American Association of State Highway and Transportation Officials, 1989.

6. "Vehicle Damage Scale for Traffic Accident Investigators", Traffic Accident Data Project, National Safety Council, 1968.

7. "Collision Deformation Classification" - SAE J224 MAR80, SAE Recommended Practices, 1980.

7 APPENDICES

7.1 Test Vehicle Equipment

The test vehicles were modified as follows for the crash tests:

- The gas tanks on the test vehicles for Tests 631, 632, and 634 were disconnected from the fuel supply line and drained. For Test 631, a 12-L safety gas tank was installed in the truck bed and connected to the fuel supply line. For Test 632, a 1-L safety gas tank was installed in the trunk area and connected to the fuel supply line. For Test 634, a 10-L custom safety gas tank was installed in the cargo box and connected to the fuel supply line. The stock fuel tanks had dry ice or gaseous CO_2 added in order to purge fuel vapors. For Test 633, no safety gas tank was installed because the vehicle was not self-powered.

- One pair of 12-volt wet cell motorcycle storage batteries was mounted in each vehicle. The batteries powered the GMH Engineering DataBrick transient data recorders. A 12-volt deep cycle gel cell battery operated the Electronic Control Box.

- A 1725-kPa CO_2 system, actuated by a solenoid valve, controlled remote braking after impact and emergency braking if necessary. Part of this system was a pneumatic ram that was attached to the brake pedal. The operating pressure for the ram was adjusted through a pressure regulator during a series of trial runs prior to the actual test. Adjustments were made to assure the shortest stopping distance without locking up the wheels. When activated, the brakes could be applied in less than 100 milliseconds.

- The remote brakes were controlled via a radio link transmitter at a console trailer. When the brakes were applied by remote control from the console trailer, the ignition was automatically rendered inoperable by removing power to the coil.

- For tests 631 and 634, an accelerator switch was located on the rear of the vehicle. The switch opened an electric solenoid which, in turn, released compressed CO_2 from a reservoir into a pneumatic ram that had been attached to the accelerator pedal. The CO_2 pressure for the accelerator ram was regulated to the same pressure of the remote braking system with a valve to adjust CO_2 flow rate.

- For tests 631 and 632, a speed control device, connected in-line with the primary winding of the coil, was used to regulate the speed of the test vehicle based on the signal from a speed sensor output from the vehicle transmission. This device was calibrated prior to the test by conducting a series of trial runs through a speed trap comprised of two tape switches set a specified distance apart and a digital timer.

- For test 634, the speed control device was not functional with the test vehicle. Therefore, the test vehicle was driven under full acceleration until impact. Trial runs were

conducted before the test in order to determine the travel distance necessary in order to reach the intended impact speed.

- For test 632, the vehicle was to be partially self-propelled. A 1-ton pickup pushed the test vehicle, which was in third gear, up to approximately 60 km/h. At this point the engine of the test vehicle was supposed to have "push-started". The test vehicle was then supposed to continue accelerating to the desired impact speed. The speed was to be limited by the speed control device used in test 631. Due to an undetermined problem, the test vehicle never started, resulting in a much lower desired impact speed.

- For test 633, the test vehicle was towed to the desired impact speed using a 2:1 tow system, meaning the tow vehicle traveled half the distance and to half the speed as the test vehicle. The maximum speed of the tow vehicle was limited by the same speed control device that had been used in test 631.

- For tests 631, 632, and 634, a microswitch was mounted below the front bumper and connected to the ignition system. A trip plate on the ground near the impact point triggered the switch when the car passed over it. The switch would open the ignition circuit and shut off the vehicle's engine prior to impact.

- Table 7-1 through Table 7-4 give specific information regarding vehicle dimensions and weights for Test 631-634.

Table 7-1 – Test 631 Vehicle Dimensions

DATE: 10/04/06 **TEST NO:** 631 **VIN NO:** 1GCFC24M4VE247803 **MAKE:** CHEVROLET

MODEL: 2500 **YEAR:** 1997 **ODOMETER:** 90314 (MI) **TIRE SIZE:** LT 245/17R16

TIRE INFLATION PRESSURE: 50 (PSI)

MASS DISTRIBUTION (kg) **LF** 573.5 **RF** 569.4 **LR** 411.1 **RR** 400.1

DESCRIBE ANY DAMAGE TO VEHICLE PRIOR TO TEST: No damage.

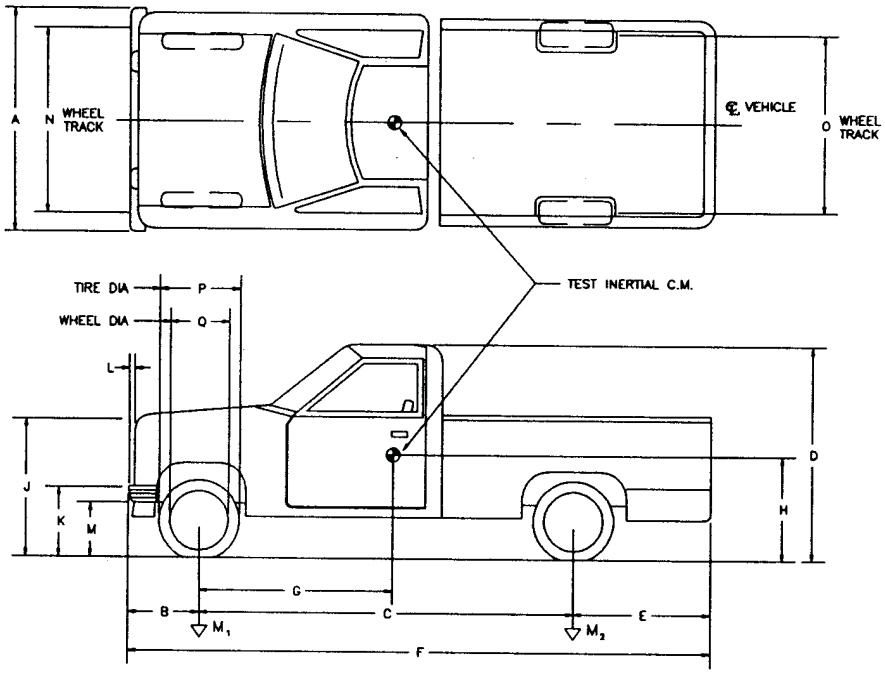

ENGINE TYPE: Gas V8

ENGINE CID:

TRANSMISSION TYPE :

X **AUTO**

MANUAL

OPTIONAL EQUIPMENT:

Air Conditioning

DUMMY DATA:

TYPE: NA

MASS: NA

SEAT POSITION: NA

GEOMETRY (cm)

A 187.0	**D** 178.50	**G** 144.1	**K** 60.0	**N** 172.0	**Q** 44.0
B 87.0	**E** 30.0	**H**	**L** 8.5	**O** 154.0	
C 334.0	**F** 451.0	**J** 104.0	**M** 39.0	**P** 75.0	

MASS - (kg)	**CURB**	**TEST INERTIAL**	**GROSS STATIC**
M1	1142.9	1153.7	1153.7
M2	811.2	874.9	874.9
MT	1954.1	2028.6	2028.6

Table 7-2 – Test 632 Vehicle Dimensions

DATE: 12/27//06 **TEST NO:** 632 **VIN NO:** 2C1MR2462N6743224 **MAKE:** GEO

MODEL: METRO **YEAR:** 1992 **ODOMETER:** 41007 (MI) **TIRE SIZE:** 155R12

TIRE INFLATION PRESSURE: 30 (PSI)

MASS DISTRIBUTION (kg) **LF** 230.8 **RF** 222.3 **LR** 151.3 **RR** 150.0

DESCRIBE ANY DAMAGE TO VEHICLE PRIOR TO TEST: No major damage. Small 2"x1" dent on lip of right front fender.

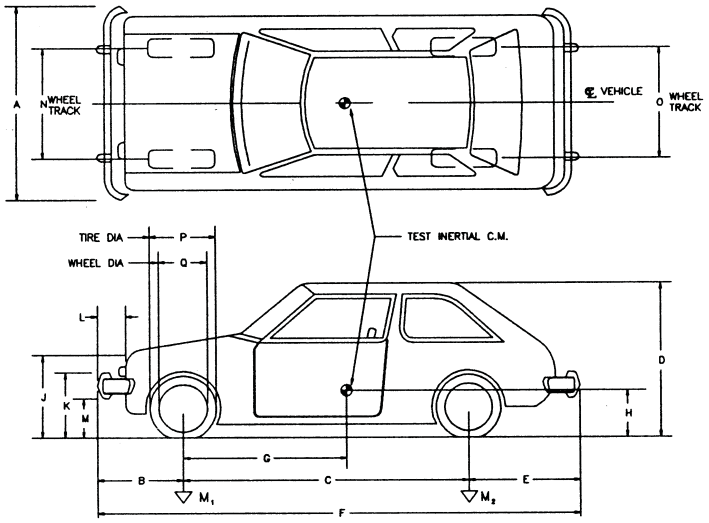

ENGINE TYPE: Gas 3-cylinder

ENGINE CID: 1-liter

TRANSMISSION TYPE :

_____**AUTO**

_X__**MANUAL**

OPTIONAL EQUIPMENT:

Air Conditioning, small towing hitch.

DUMMY DATA:

TYPE: Hybrid III 50th%

MASS: 75 kg

SEAT POSITION: Passenger Front

GEOMETRY (cm)

A 142.5	**D** 134.0	**G** 92.7	**K** 52.0	**N** 135.0	**Q** 33.0
B 80.0	**E** 70.0	**H**	**L** 9.0	**O** 134.2	
C 227.0	**F** 377.0	**J** 62.5	**M** 23.0	**P** 55.0	

MASS - (kg)	**CURB**	**TEST INERTIAL**	**GROSS STATIC**
M1	453.1	466.9	502.0
M2	301.3	322.2	367.3
MT	754.3	789.1	869.3

Table 7-3 – Test 633 Vehicle Dimensions

DATE: 25/07 **TEST NO:** 633 **VIN NO:** 2C1MR6462R6763258 **MAKE:** Geo

MODEL: Metro **YEAR:** 1994 **ODOMETER:** ? (MI) **TIRE SIZE:** P155R12?

TIRE INFLATION PRESSURE: 32 (PSI)

MASS DISTRIBUTION (kg) **LF** 225.5 **RF** 229.6 **LR** 156.2 **RR** 145.3

DESCRIBE ANY DAMAGE TO VEHICLE PRIOR TO TEST: None.

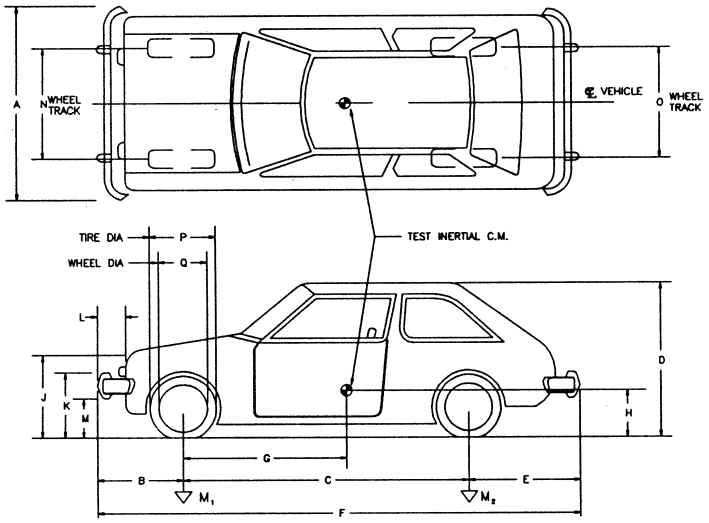

ENGINE TYPE: Gas 3-cylinder

ENGINE CID: 1-liter

TRANSMISSION TYPE :

____ **AUTO**

X **MANUAL**

OPTIONAL EQUIPMENT:

Air Conditioning

DUMMY DATA:

TYPE: Hybrid III 50th%

MASS: 75 kg

SEAT POSITION: Passenger Front

GEOMETRY (cm)

A 153.0	**D** 136.5	**G** 98.8	**K** 48.0	**N** 134.5	**Q** 33.0
B 76.0	**E** 65.0	**H**	**L** 9.0	**O** 134.5	
C 237.0	**F** 378.0	**J** 65.0	**M** 21.0	**P** 51.0	

MASS - (kg)	**CURB**	**TEST INERTIAL**	**GROSS STATIC**
M1	455.0	473.3	513.0
M2	301.5	337.0	376.9
MT	755.6	810.3	889.9

Table 7-4 – Test 634 Vehicle Dimensions

DATE: 6/20/07 **TEST NO:** 634 **VIN NO:** 1GDJ7H1DGYJ904727 **MAKE:** GMC

MODEL: TOP KICK **YEAR:** 2000 **ODOMETER:** 104666 (MI) **TIRE SIZE:** G357 11R225

MASS DISTRIBUTION (kg) **LF** _____ **RF** _____ **LR** _____ **RR** _____

DESCRIBE ANY DAMAGE TO VEHICLE PRIOR TO TEST: None

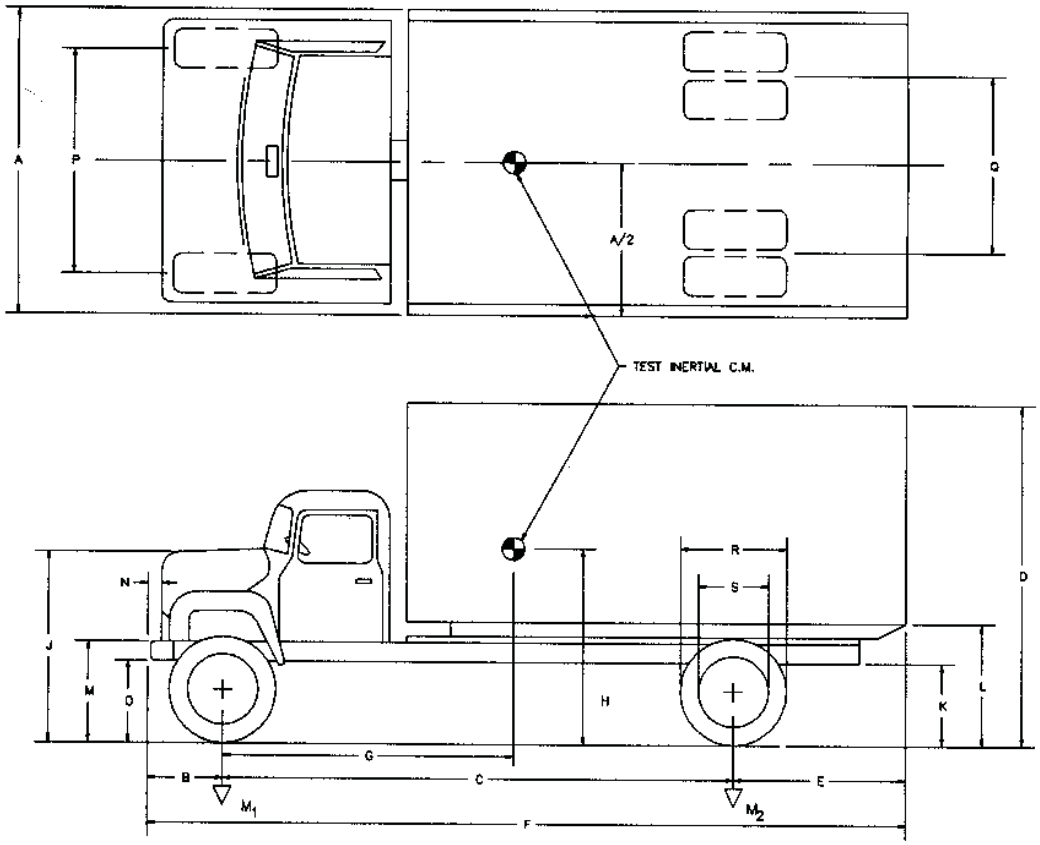

GEOMETRY (cm)

A 242.5	**D** 375.5	**G** 306.8	**K** 77.5	**N** 10.5	**Q** 184.5
B 83.0	**E** 235.0	**H**	**L** 123.0	**O** 62.0	**R** 104.0
C 530.0	**F** 848.0	**J** 166.0	**M** 96.0	**P** 202.0	**S** 59.0

MASS - (kg)	**CURB**	**TEST INERTIAL**	**GROSS STATIC**
M1	2277.0	2585.5	2585.5
M2	3129.8	5470.3	5470.3
MT	5406.8	8055.8	8055.8

7.2 Test Vehicle Guidance System

A rail guidance system directed the vehicle into the barrier. The guidance rail, anchored at 3.8-m intervals along its length, was used to guide a mechanical arm, which was attached to the front left wheel of each of the vehicles. A rope was used to trigger the release mechanism on the guidance arm, thereby releasing the vehicle from the guidance system before impact.

7.3 Photo - Instrumentation

Several high-speed video cameras recorded the impact during the crash tests. The types of cameras and their locations are shown in Table 7-5 through Table 7-8 and Figure 7-1.

All of these cameras were mounted on tripods except the three that were mounted on a 10.7-m high tower directly over the impact point of the test barrier.

A video camera and a digital still camera were turned on by hand and used for panning during the test. A tape switch located on the ground and connected to a computer was used to trigger the high-speed cameras. Both the vehicle and the barrier were photographed before and after impact with a normal-speed beta video camera and a digital still camera. Individual video reports of each test in this project have been assembled using selected portions of the crash testing coverage.

Table 7-5 – Test 631 Camera Type and Location

Camera Label	Camera Type	Focal Length (mm)	Rate: (fr./sec.)	Coordinate (m)		
				X	Y	Z
V1 (Upstream)	Weinberger SpeedCam Visario 1500	85	500	22.2	-0.076	1.2
V2 (Downstream)	Weinberger SpeedCam Visario 1500	105	500	-68.9	-0.381	1.2
V3 (Across)	Weinberger SpeedCam Visario 1500	24	500	-1.8	-21.4	1.2
V4 (Behind)	Weinberger SpeedCam Visario 1500	35	500	-27	10.3	1.8
V5 (Tower Upstream)	Weinberger SpeedCam Visario 1500	20	500	0.61	0	9.1
V6 (Tower Center)	Weinberger SpeedCam Visario 1500	20	500	0	0	9.1
V7 (Tower Downstream)	Weinberger SpeedCam Visario 1500	7	500	-0.61	0	9.1
C (Pan Digital Camera)	Canon XL-1	Vareis (zoom lens)	30	-5.8	-25.2	4.5
N (Digital SLR Camera)	Nikon D2X	35	N/A	-5.8	-25.1	4.5

Note: X, Y, and Z distances are relative to the impact point. (See Figure 7-1)

Table 7-6 – Test 632 Camera Type and Location

Camera Label	Camera Type	Focal Length (mm)	Rate: (fr./sec.)	Coordinate (m) X	Y	Z
V1 (Upstream)	Weinberger SpeedCam Visario 1500	85	500	34.3	0	1.2
V2 (Downstream)	Weinberger SpeedCam Visario 1500	105	500	-64.3	-0.178	1.2
V3 (Across)	Weinberger SpeedCam Visario 1500	24	500	1.3	-21.5	1.2
V4 (Behind)	Weinberger SpeedCam Visario 1500	35	500	-25.5	7.2	1.8
V5 (Tower Upstream)	Weinberger SpeedCam Visario 1500	20	500	0.61	0	9.1
V6 (Tower Center)	Weinberger SpeedCam Visario 1500	20	500	0	0	9.1
V7 (Tower Downstream)	Weinberger SpeedCam Visario 1500	7	500	-0.61	0	9.1
J (Pan Digital Camera)	JVC GY-HD100	Vareis (zoom lens)	30	-1.3	-22	4.5
N (Digital SLR Camera)	Nikon D2X	35	N/A	-2.4	-22.6	4.5

Note: X, Y, and Z distances are relative to the impact point. (See Figure 7-1)

Table 7-7 – Test 633 Camera Type and Location

Camera Label	Camera Type	Focal Length (mm)	Rate: (fr./sec.)	Coordinate (m) X	Y	Z
V1 (Upstream)	Weinberger SpeedCam Visario 1500	85	250	34.5	0.05	1.2
V2 (Downstream)	Weinberger SpeedCam Visario 1500	105	500	-64.7	0.228	1.2
V3 (Across)	Weinberger SpeedCam Visario 1500	24	500	0.787	-22	1.2
V4 (Behind)	Weinberger SpeedCam Visario 1500	35	500	-26.5	7.3	1.8
V5 (Tower Upstream)	Weinberger SpeedCam Visario 1500	20	500	0.61	0	9.1
V6 (Tower Center)	Weinberger SpeedCam Visario 1500	20	500	0	0	9.1
V7 (Tower Downstream)	Weinberger SpeedCam Visario 1500	7	500	-0.61	0	9.1
J (Pan Digital Camera)	JVC GY-HD100	Vareis (zoom lens)	30	-1.8	-23.3	4.5
N (Digital SLR Camera)	Nikon D2X	35	N/A	-3.1	23.3	4.5

Note: X, Y, and Z distances are relative to the impact point. (See Figure 7-1)

Table 7-8 – Test 634 Camera Type and Location

Camera Label	Camera Type	Focal Length (mm)	Rate: (fr./sec.)	Coordinate (m) X	Y	Z
V1 (Upstream)	Weinberger SpeedCam Visario 1500	85	500	29.2	0.228	1.2
V2 (Downstream)	Weinberger SpeedCam Visario 1500	105	500	-67.4	0.203	1.2
V3 (Across)	Weinberger SpeedCam Visario 1500	24	500	0.127	-21.4	1.2
V4 (Behind)	Weinberger SpeedCam Visario 1500	35	500	-29.9	5.7	1.8
V5 (Tower Upstream)	Weinberger SpeedCam Visario 1500	20	500	0.61	0	9.1
V6 (Tower Center)	Weinberger SpeedCam Visario 1500	20	500	0	0	9.1
V7 (Tower Downstream)	Weinberger SpeedCam Visario 1500	7	500	-0.61	0	9.1
J (Pan Digital Camera)	JVC GY-HD100	Vareis (zoom lens)	30	-2.8	-22.2	4.5
N (Digital SLR Camera)	Nikon D2X	35	N/A	-3.8	-22.2	4.5

Note: X, Y, and Z distances are relative to the impact point. (See Figure 7-1)

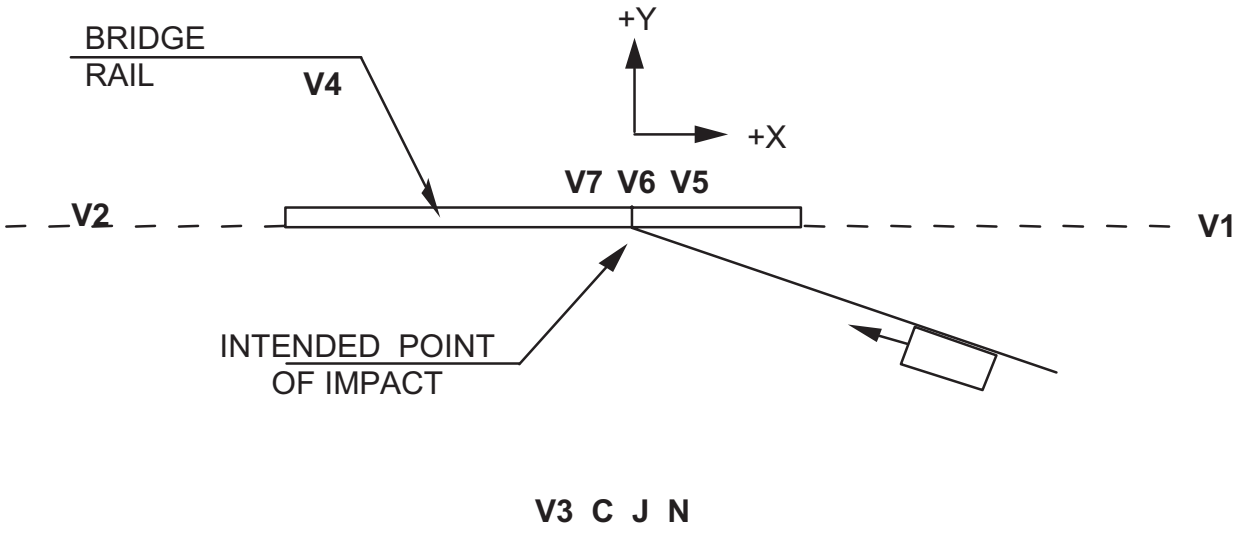

Figure 7-1 – Camera Locations

The following are the pretest procedures that were required to enable video data reduction to be performed using video analysis software:

1) Butterfly targets were attached to the top and sides of the test vehicle. The targets were located on the vehicle at intervals of 500 mm (1.64 ft) and 1000 mm (3.28 feet.). The targets along the side of the vehicle were located 0.90 m above the pavement. The targets established scale factors and horizontal and vertical alignment.

2) Flashbulbs, mounted on the test vehicle, were electronically triggered to establish a) initial vehicle-to-barrier-contact, and b) the time of the application of the vehicle brakes. The impact flashbulbs begin to glow immediately upon activation, but have a delay of several milliseconds before reaching full intensity.

3) High-speed digital video cameras were all time-coded through the use of a portable computer and were triggered as the test vehicle passed over a tape switch located on the vehicle path upstream of impact.

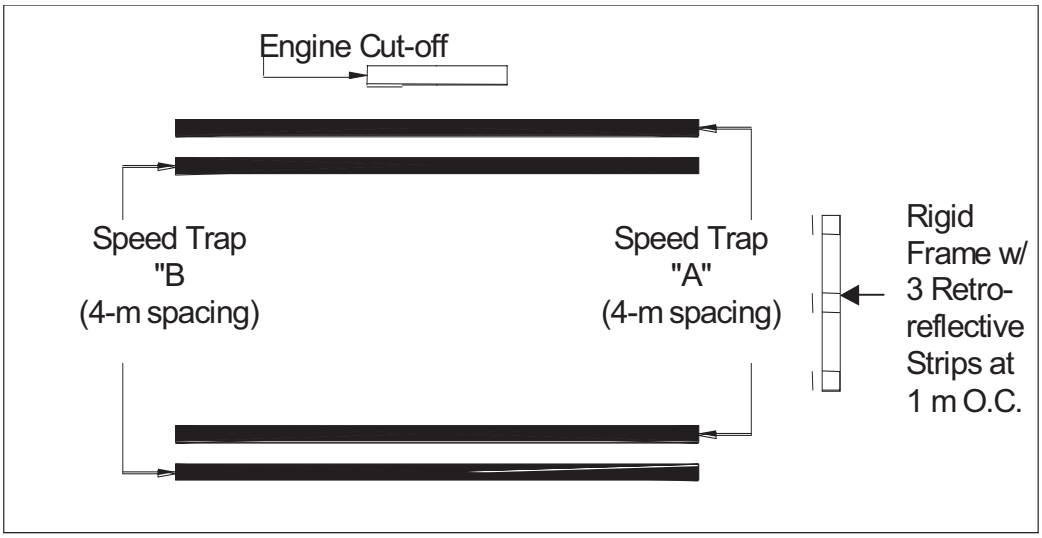

Figure 7-2 – Tape Switch Layout

7.4 Electronic Instrumentation and Data

Transducer data were recorded on two separate GMH Engineering, DataBrick, Model II, digital transient data recorders (TDRs) that were mounted in the vehicle for all tests. The transducers mounted on the vehicle include two sets of accelerometers and one set of rate gyros at the center of gravity. The TDR data were reduced using a desktop personal computer running DADiSP 2002.

The rate gyro and accelerometer specifications are shown in Table 7-9. The vehicle accelerometer and gyro sign convention used throughout this report is the same as that described in NCHRP Report 350 and is shown in Figure 7-3.

A rigid stand with three retro-reflective 90° polarizing tape strips was placed on the ground near the test article and alongside the path of the test vehicle (Figure 7-2). The strips were spaced at carefully measured intervals of 1.000 m. The test vehicle had an onboard optical sensor that produced sequential impulses or "event blips" that were recorded concurrently with the accelerometer signals on the TDR, serving as "event markers". The impact velocity of the vehicle could be determined from these sensor impulses and timing cycles and the known distance between the tape strips. A pressure-sensitive tape switch on the front bumper of the vehicle closed at the instant of impact and triggered two events: 1) an "event marker" was added to the recorded data, and 2) a flashbulb mounted on the top of the vehicle was activated. Two other pressure-sensitive tape switches, connected to a speed trap, were placed 4.000 m apart just upstream of the test article specifically to establish the impact speed of the test vehicle. The layout for all of the pressure-sensitive tape switches is shown in Figure 7-2.

The data curves are shown in Figure 7-4 through Figure 7-19 and include the accelerometer and rate gyro records from the test vehicles. They also show the velocity and displacement curves for the longitudinal and lateral components. These plots were needed to calculate the occupant impact velocity defined in NCHRP Report 350. All data were analyzed using software written by DADiSP and modified by the Department.

NOTE: There are no data plots for Test 634 because NCHRP Report 350 does not require accelerometer data for the 8000S test series.

Table 7-9 – Accelerometer Specifications

TYPE	LOCATION	RANGE	ORIENTATION	TEST NUMBER
Endevco	VEHICLE C.G.	100 G	Longitudinal (primary)	631,632,633
Endevco	VEHICLE C.G.	100 G	Lateral (primary)	631,632,633
Endevco	VEHICLE C.G.	100 G	Vertical (primary)	631,632,633
Endevco	VEHICLE C.G.	100 G	Longitudinal (secondary)	631,632,633
Endevco	VEHICLE C.G.	100 G	Lateral (secondary)	631,632,633
Endevco	VEHICLE C.G.	100 G	Vertical (secondary)	631,632,633
BEI Systron Donner Inertial	191 mm (7.5-in) behind the C.G. (along the X-axis)	500 deg/sec	Roll	631,632,633
BEI Systron Donner Inertial	191 mm (7.5-in) behind the C.G. (along the X-axis)	500 deg/sec	Pitch	631,632,633
BEI Systron Donner Inertial	191 mm (7.5-in) behind the C.G. (along the X-axis)	500 deg/sec	Yaw	631,632,633

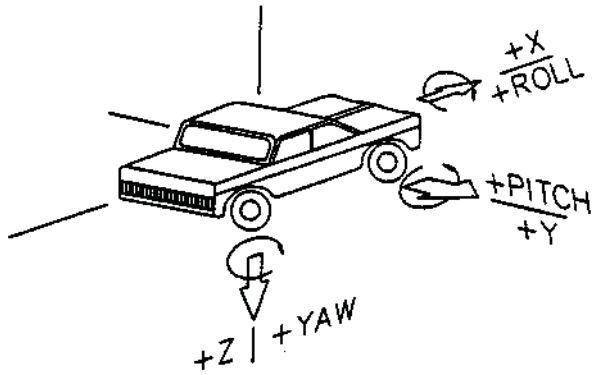

Figure 7-3 – Vehicle Accelerometer Sign Convention

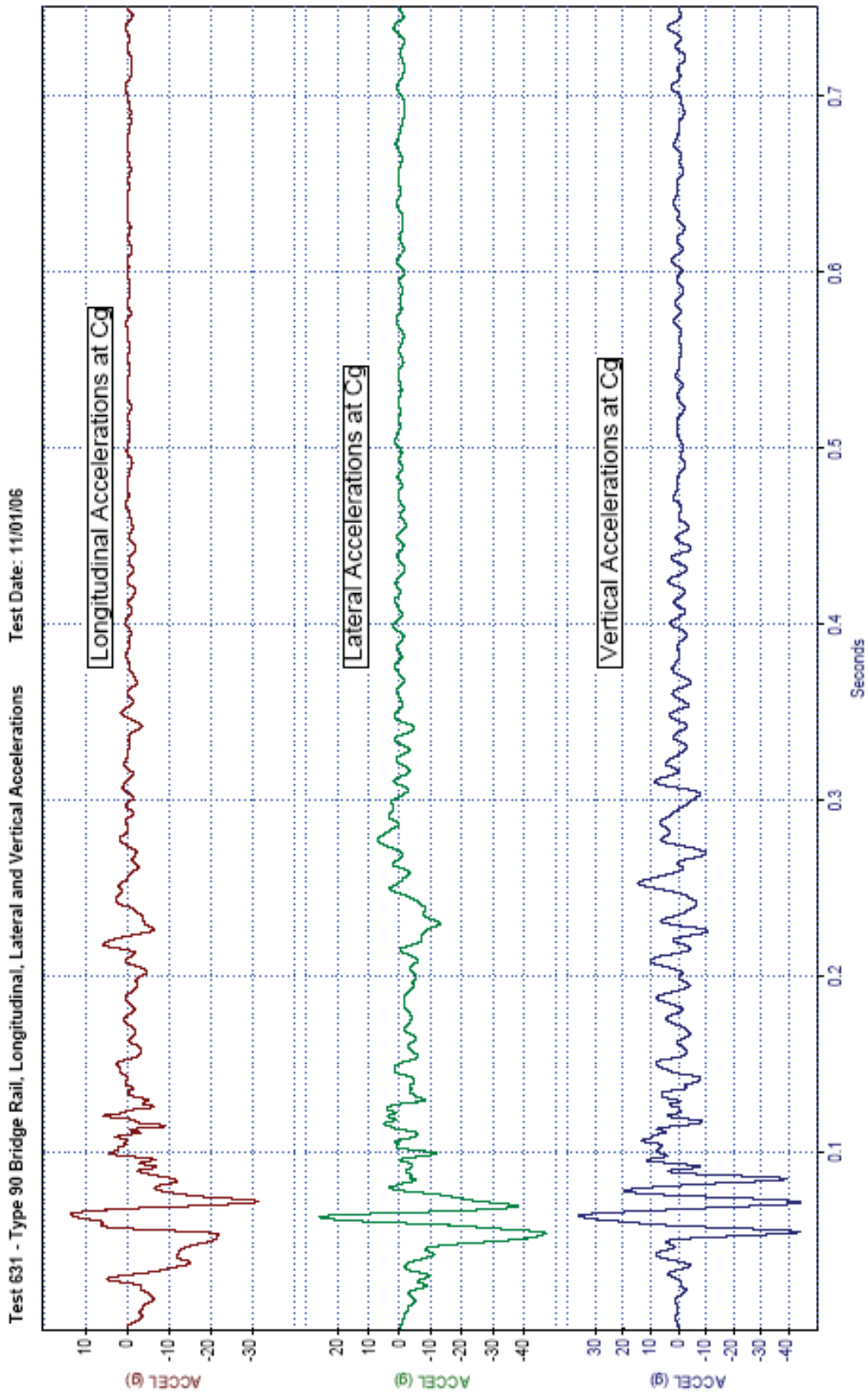

Figure 7-4 – Test 631 Vehicle Accelerations Vs Time

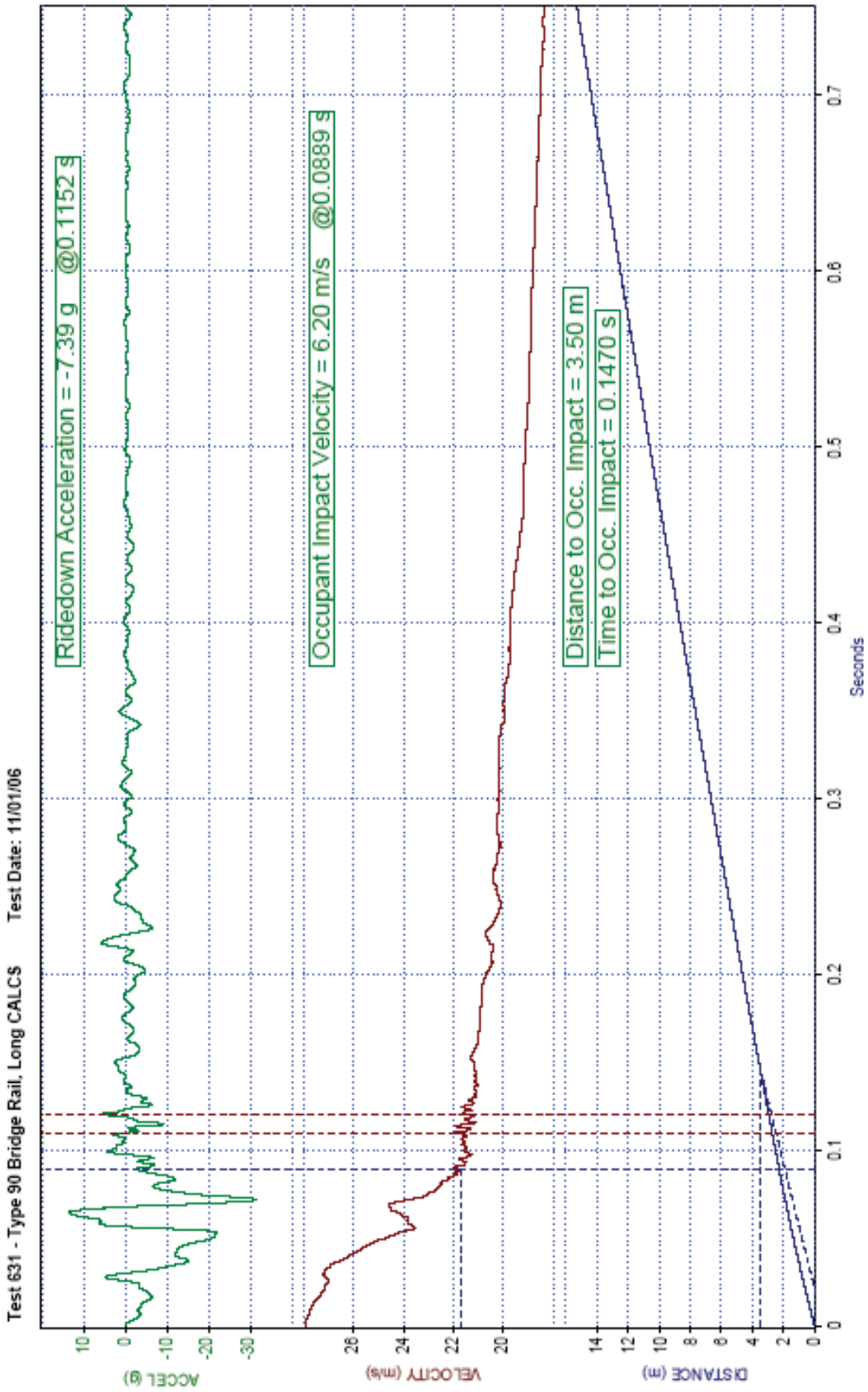

Figure 7-5 – Test 631 Vehicle Longitudinal Acceleration, Velocity, and Distance Vs Time

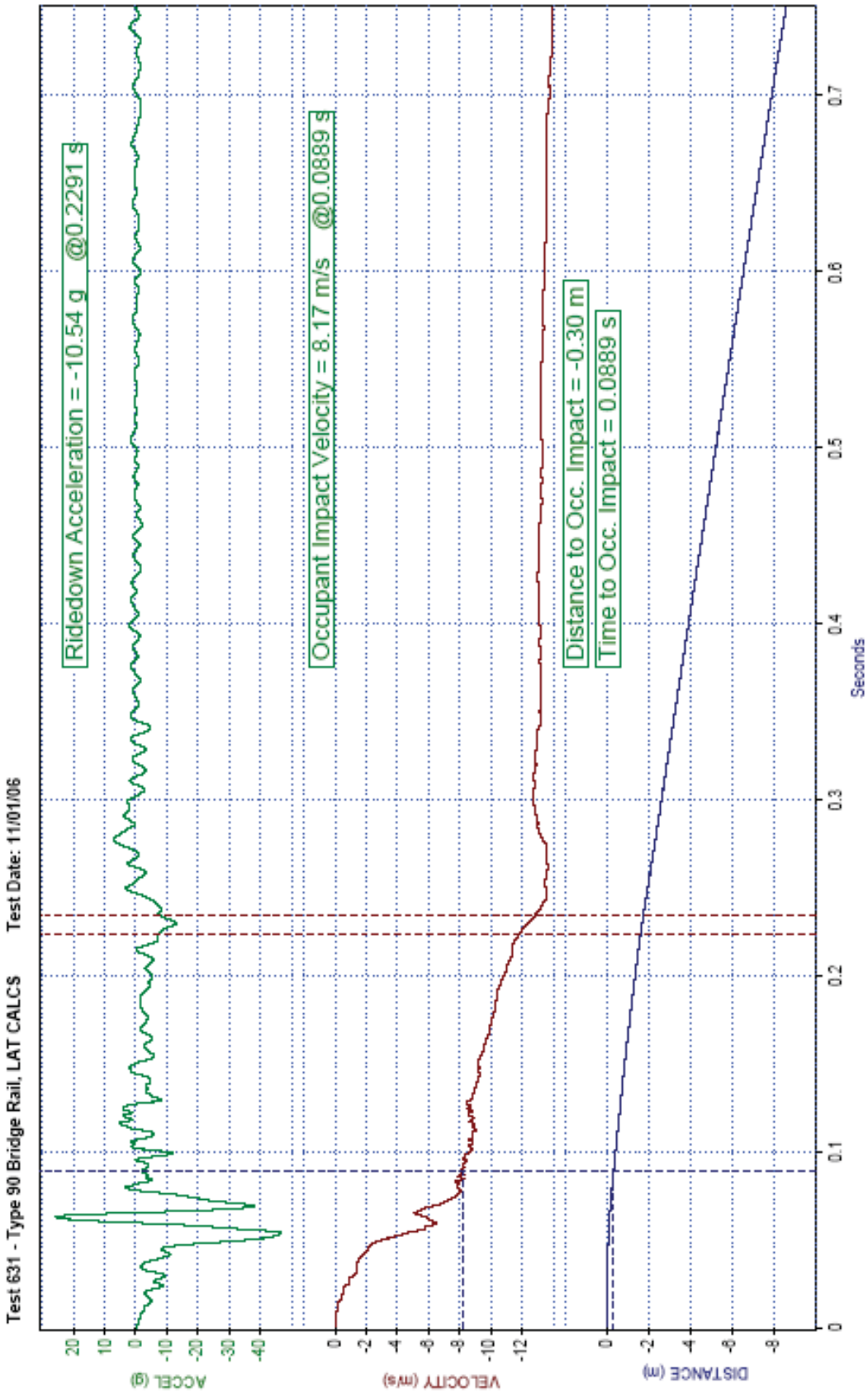

Figure 7-6 – Test 631 Vehicle Lateral Acceleration, Velocity, and Distance Vs Time

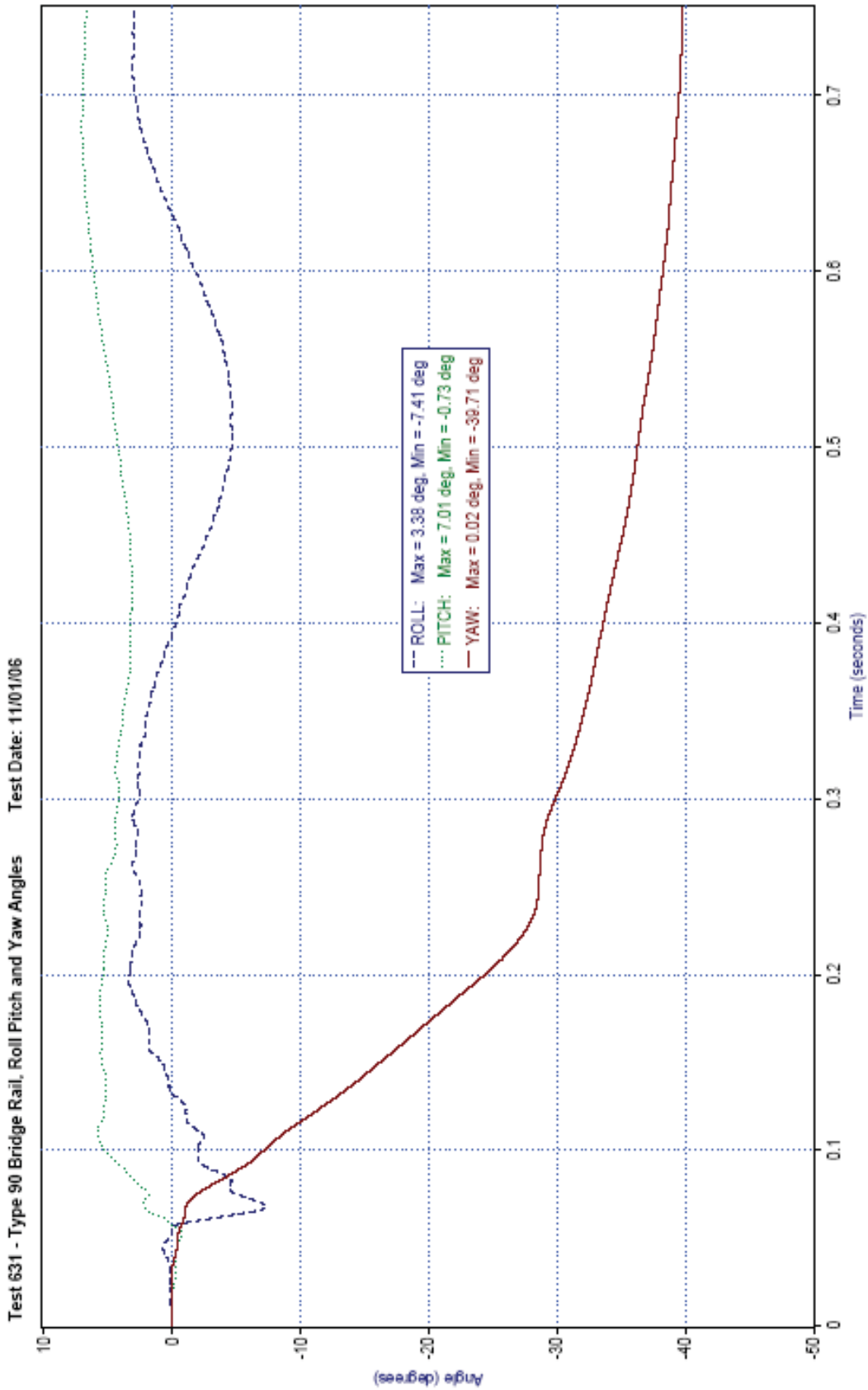

Figure 7-7 – Test 631 Vehicle Roll, Pitch, and Yaw Vs Time

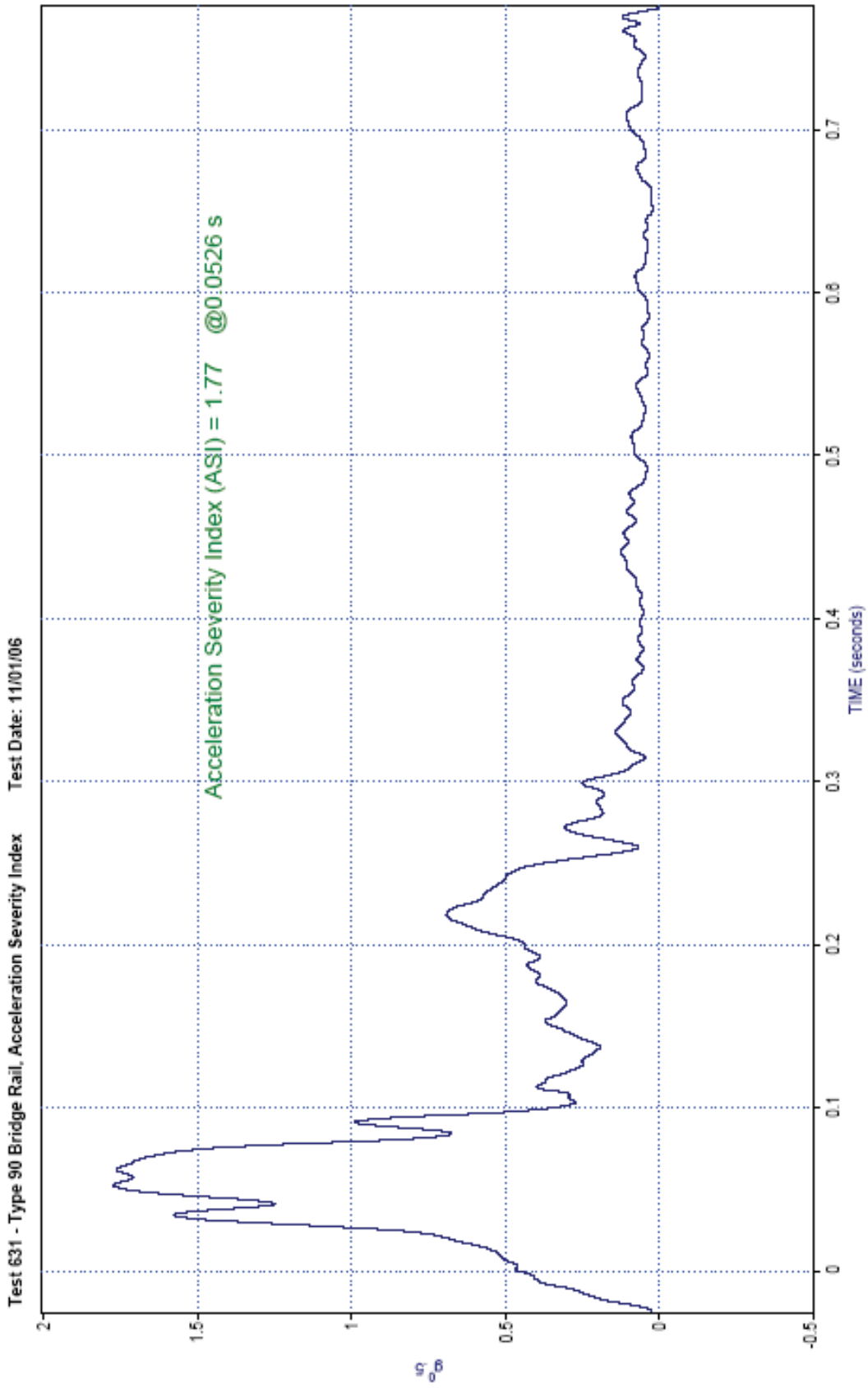

Figure 7-8 – Test 631 Vehicle Acceleration Severity Index (ASI) Vs Time

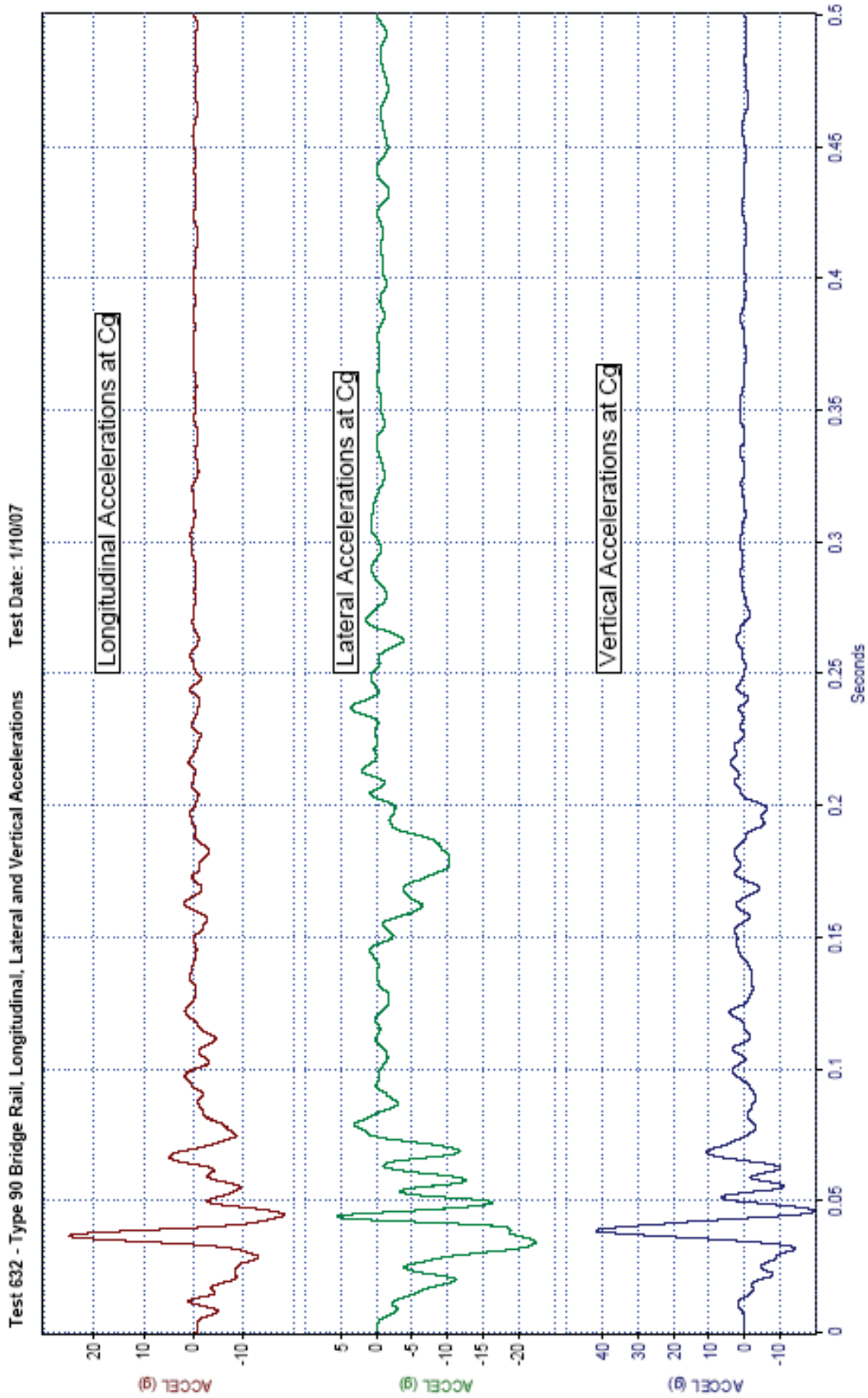

Figure 7-9 – Test 632 Vehicle Accelerations Vs Time

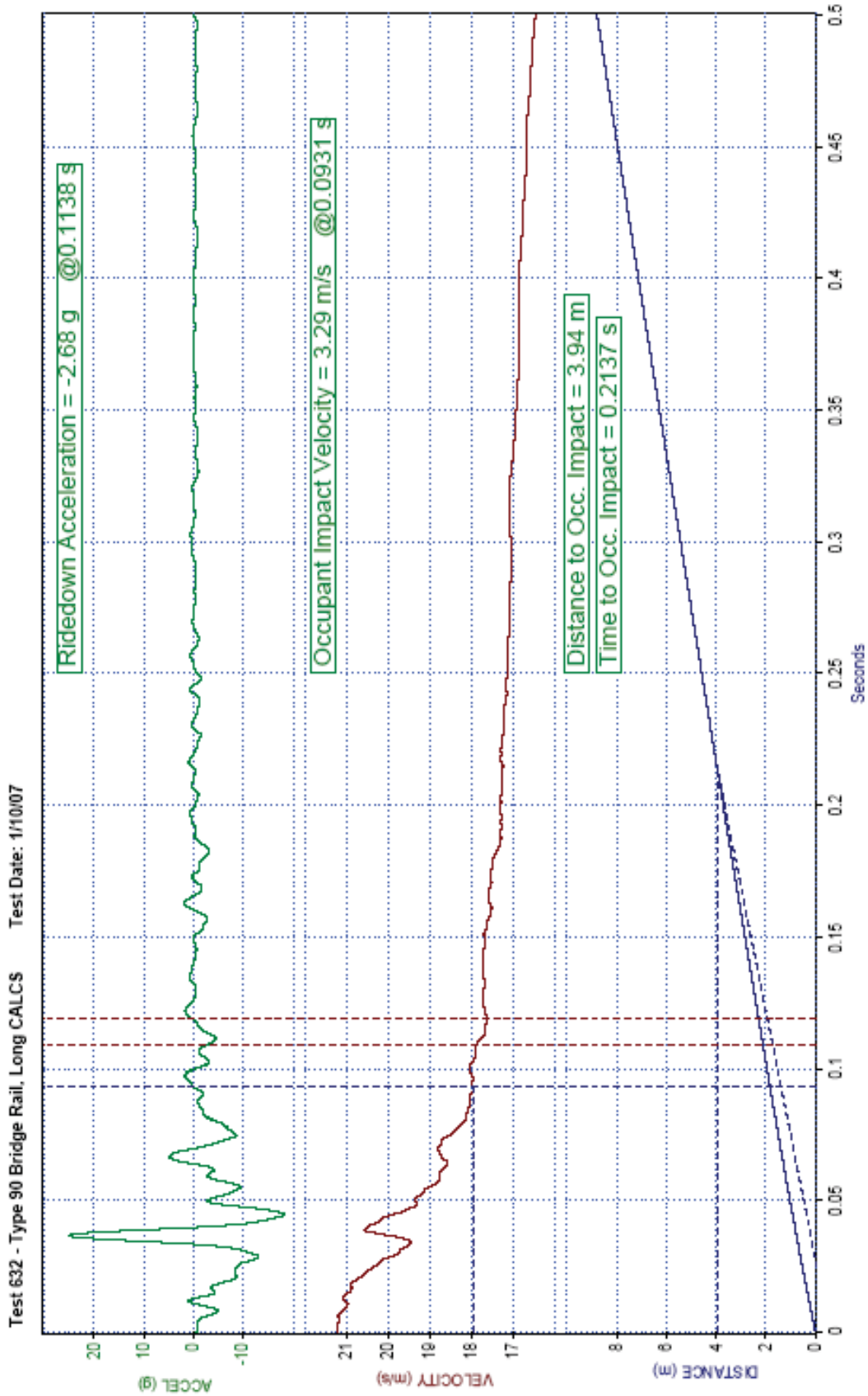

Figure 7-10 – Test 632 Vehicle Longitudinal Acceleration, Velocity, and Distance Vs Time

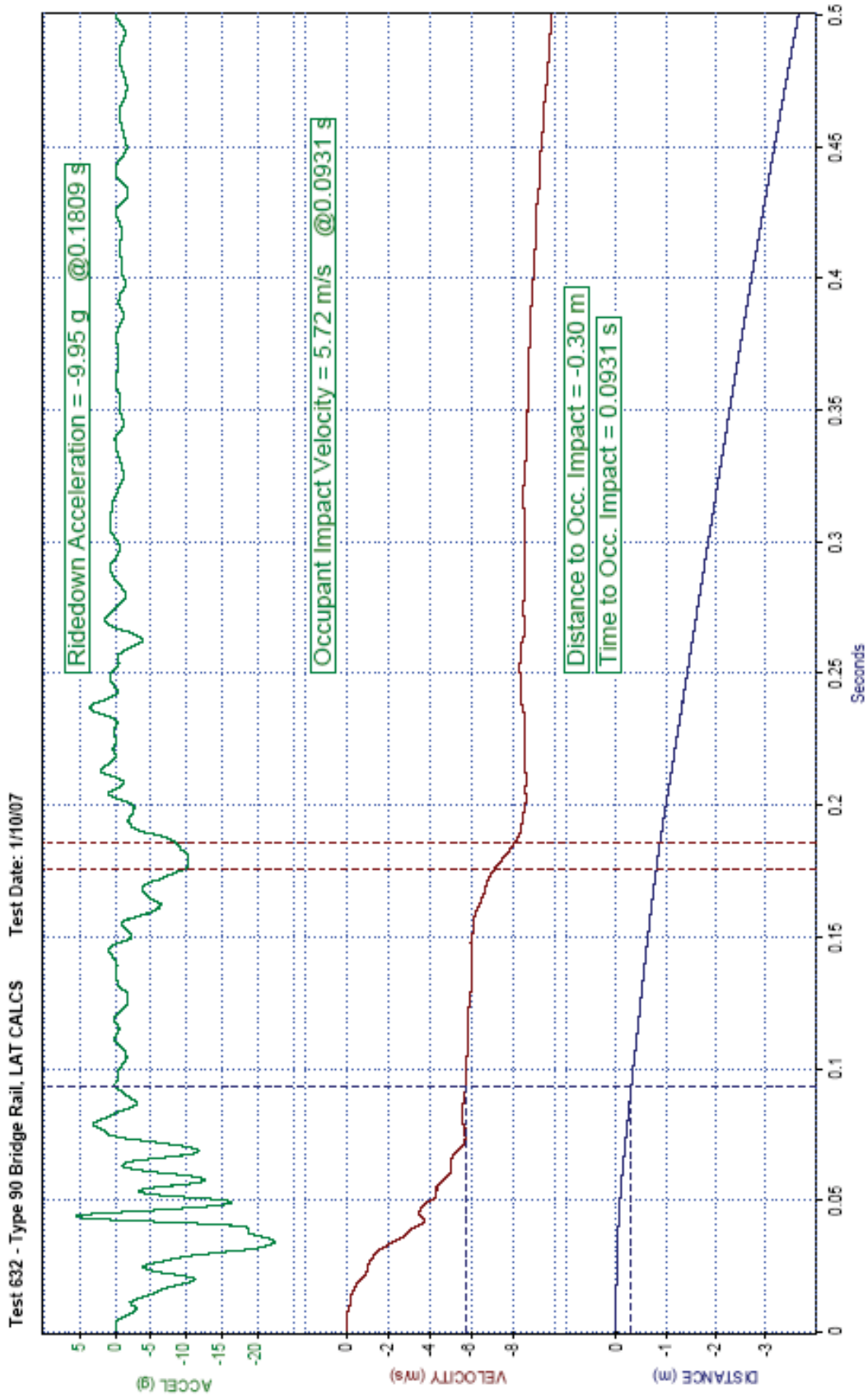

Figure 7-11 – Test 632 Vehicle Lateral Acceleration, Velocity, and Distance Vs Time

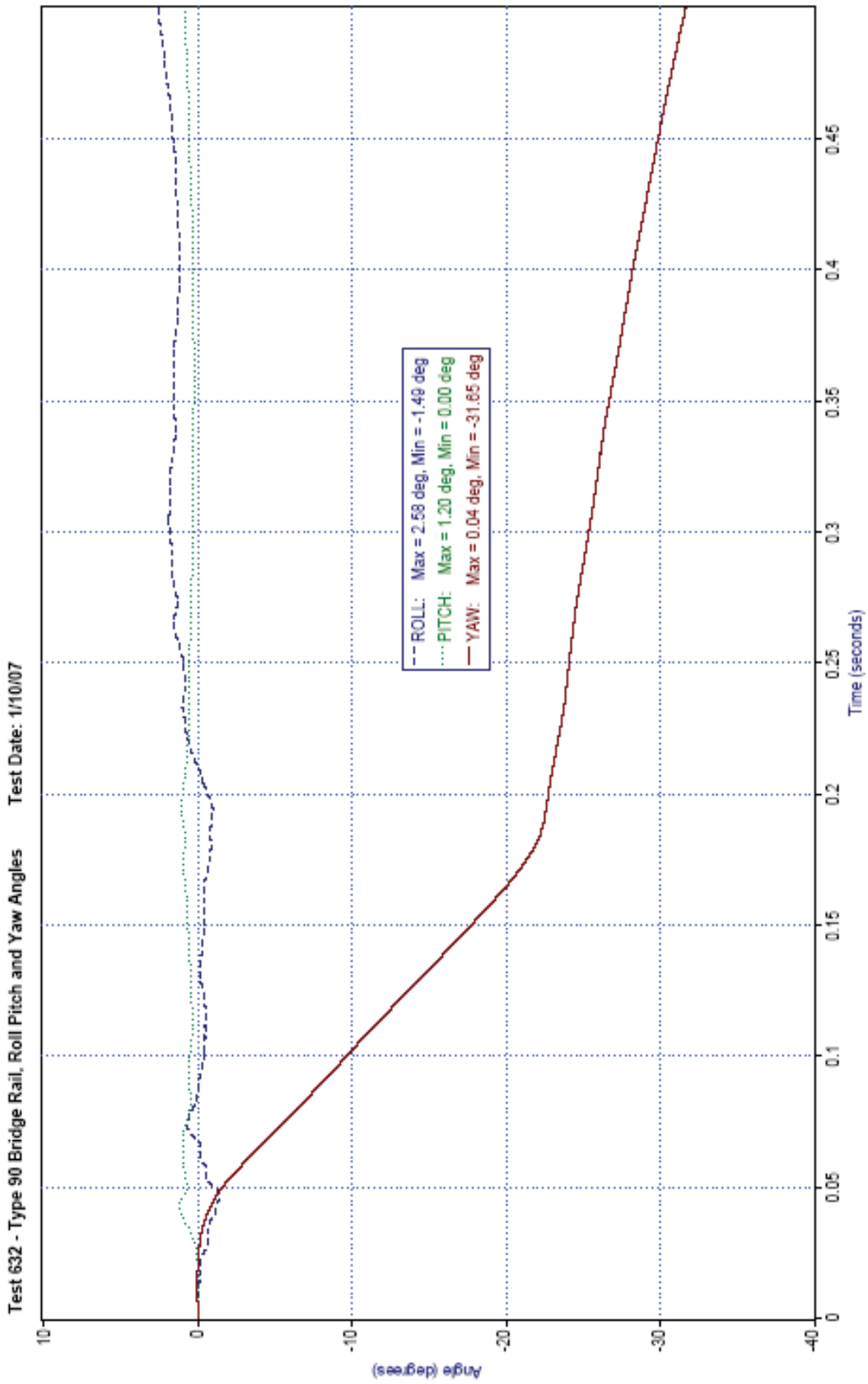

Figure 7-12 – Test 632 Vehicle Roll, Pitch, and Yaw Vs Time

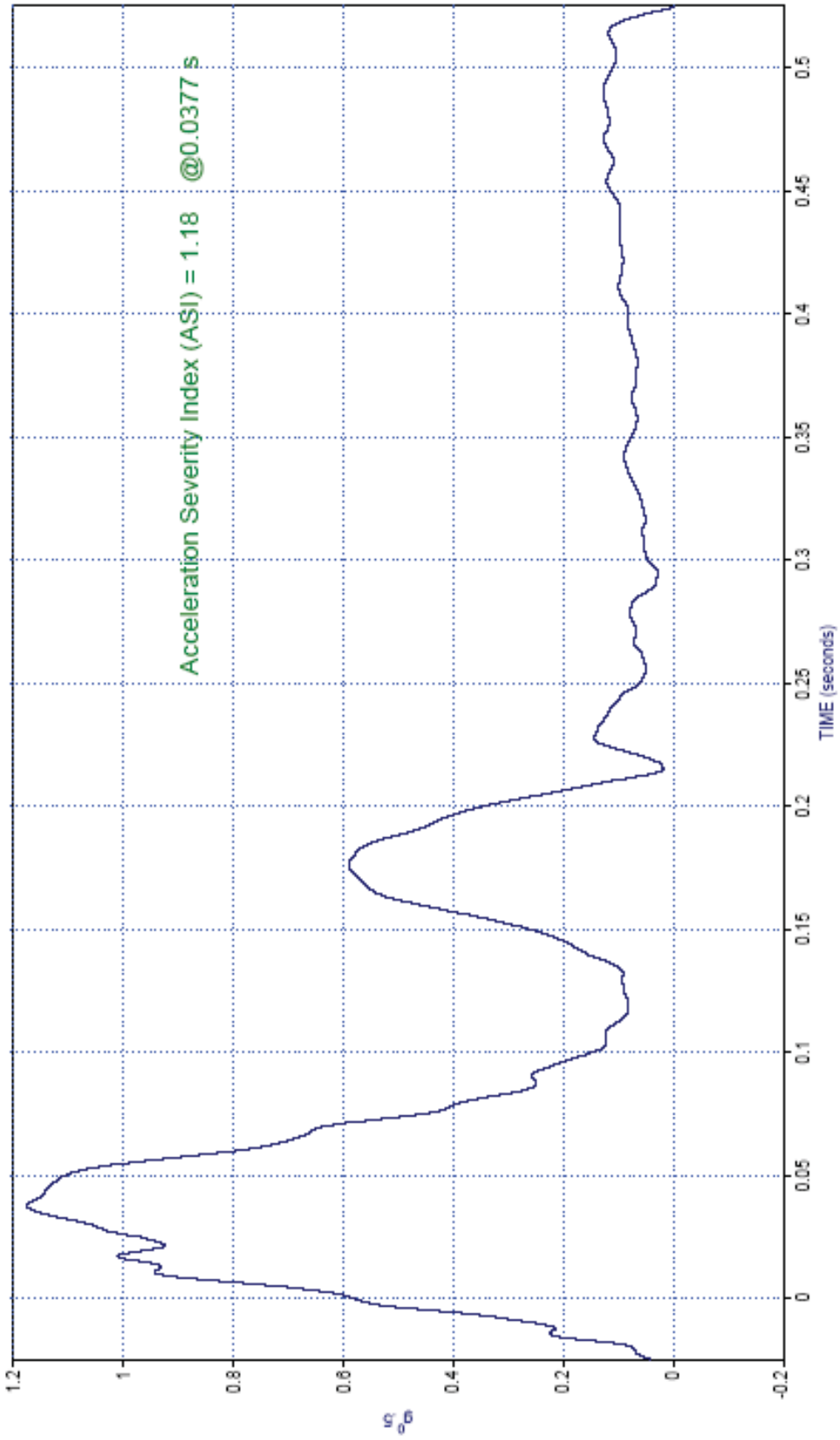

Figure 7-13 – Test 632 Vehicle Acceleration Severity Index (ASI) Vs Time

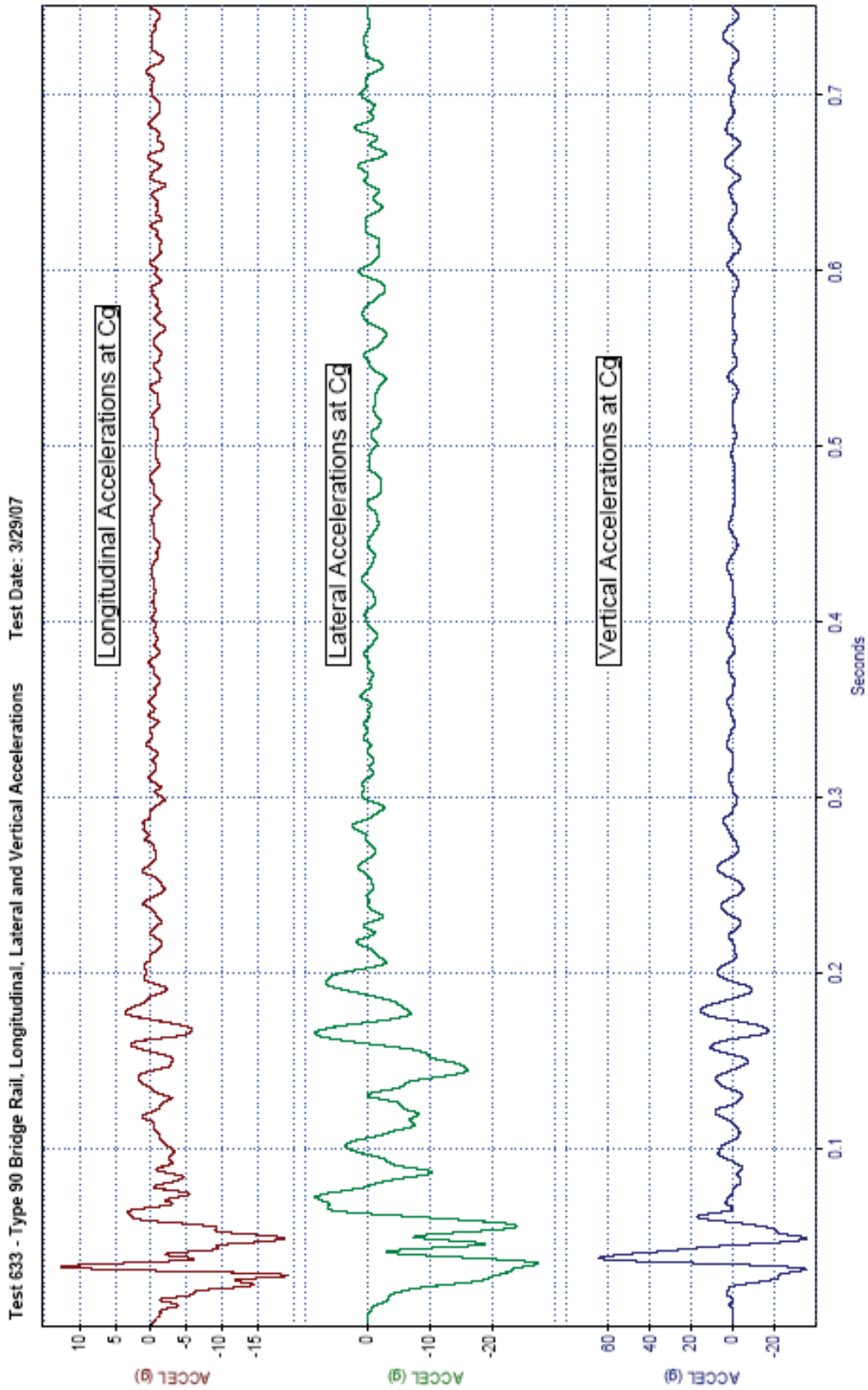

Figure 7-14 – Test 633 Vehicle Accelerations Vs Time

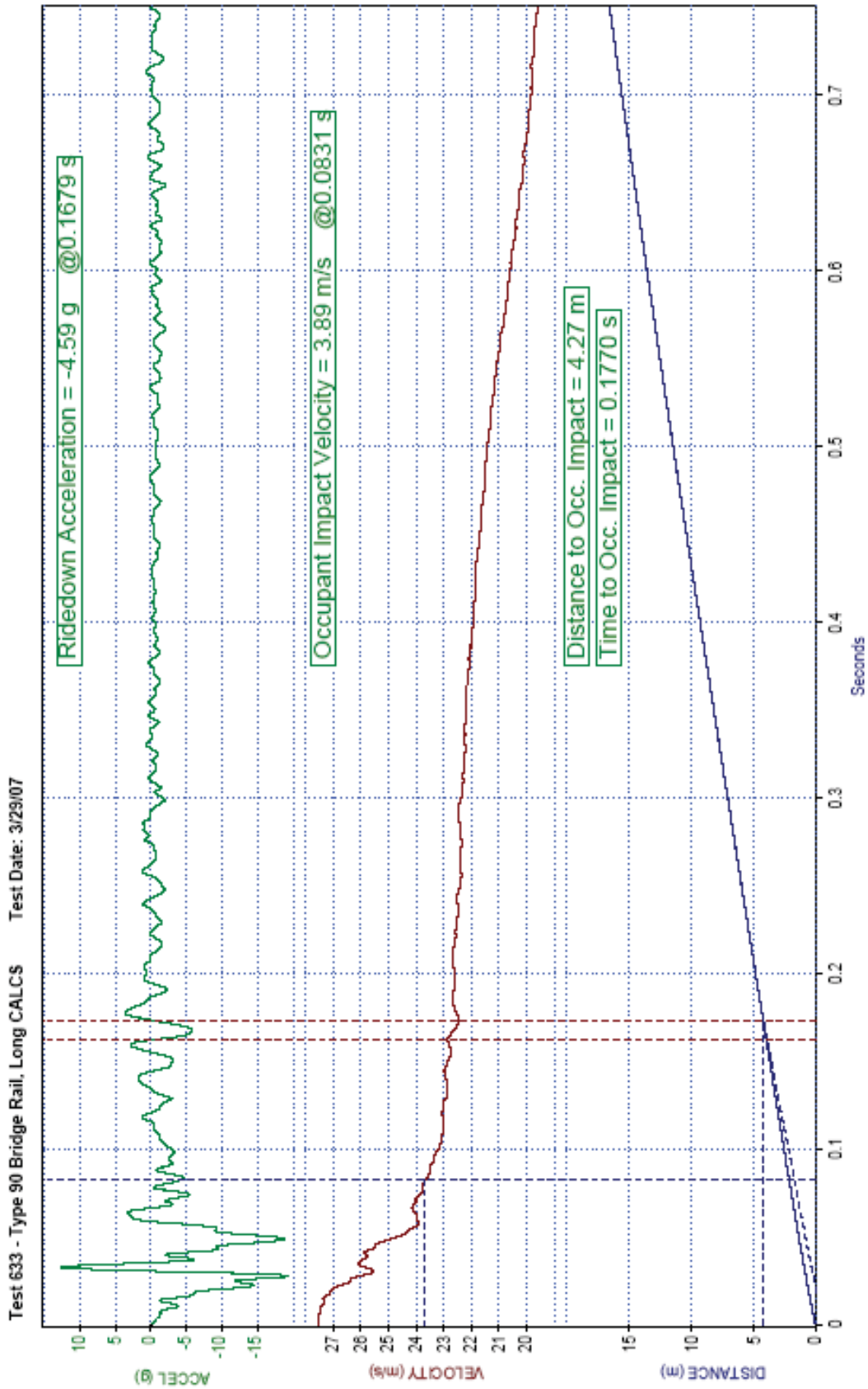

Figure 7-15 – Test 633 Vehicle Longitudinal Acceleration, Velocity, and Distance Vs Time

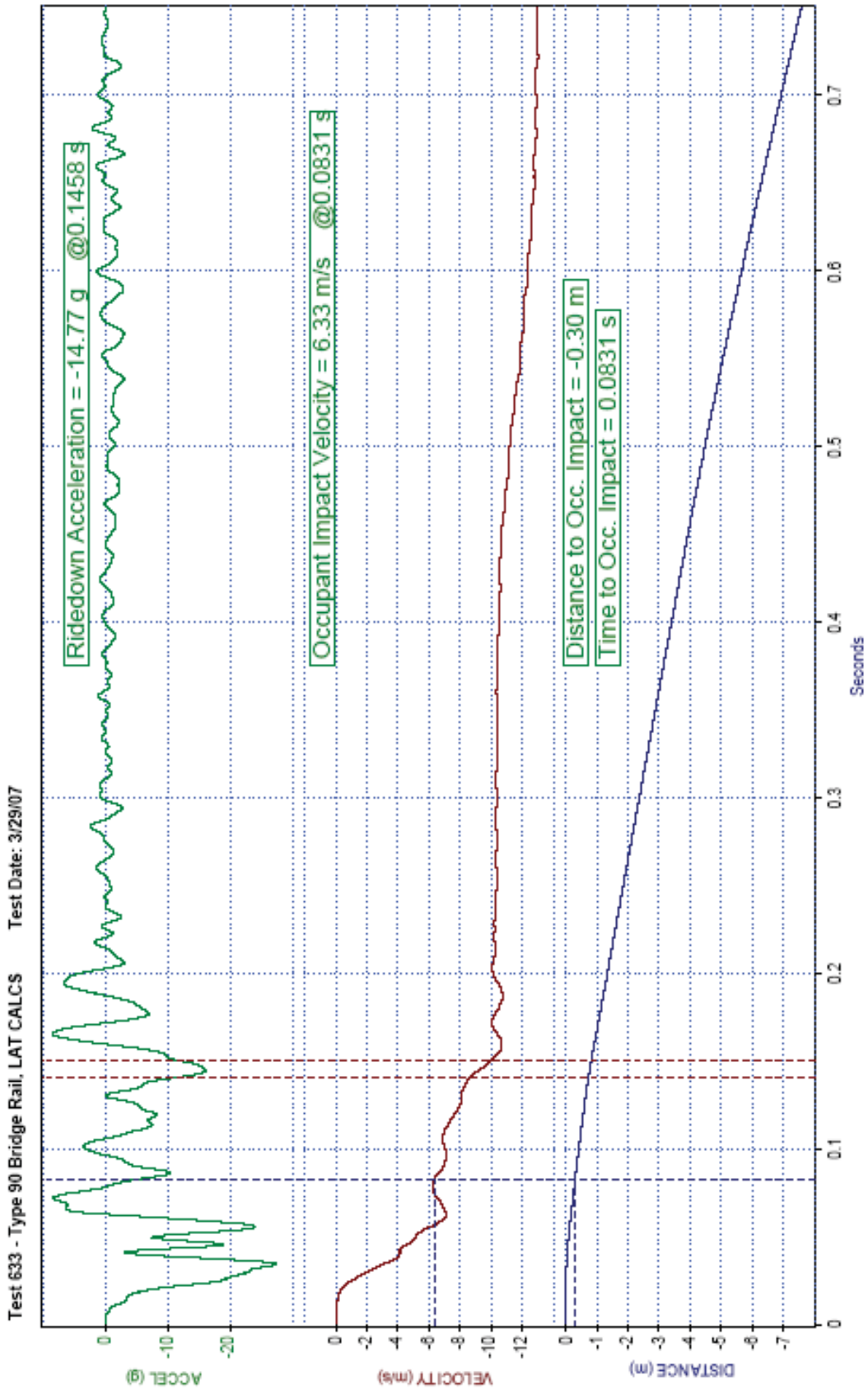

Figure 7-16 – Test 633 Vehicle Lateral Acceleration, Velocity, and Distance Vs Time

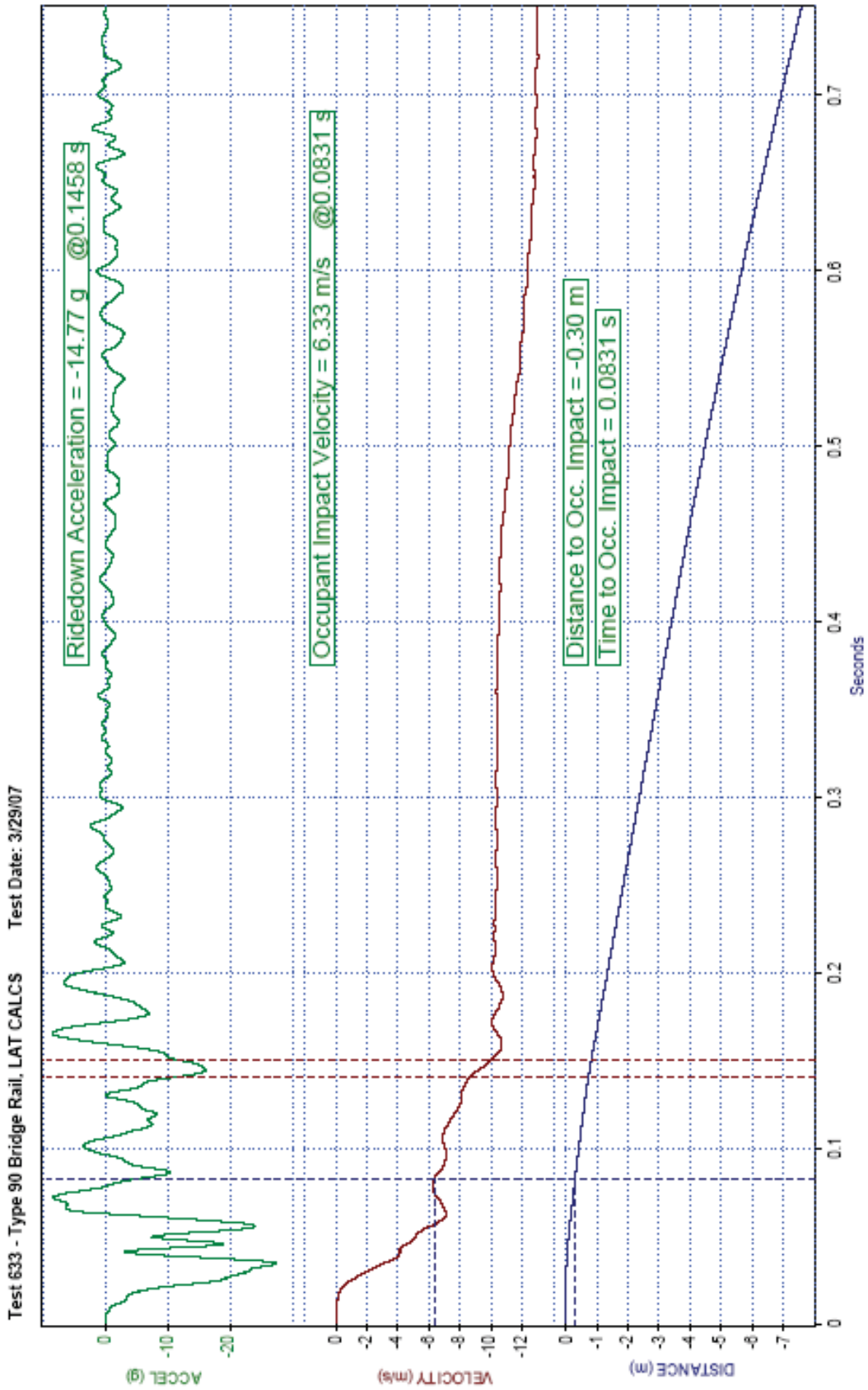

Figure 7-17 – Test 633 Vehicle Lateral Acceleration, Velocity, and Distance Vs Time

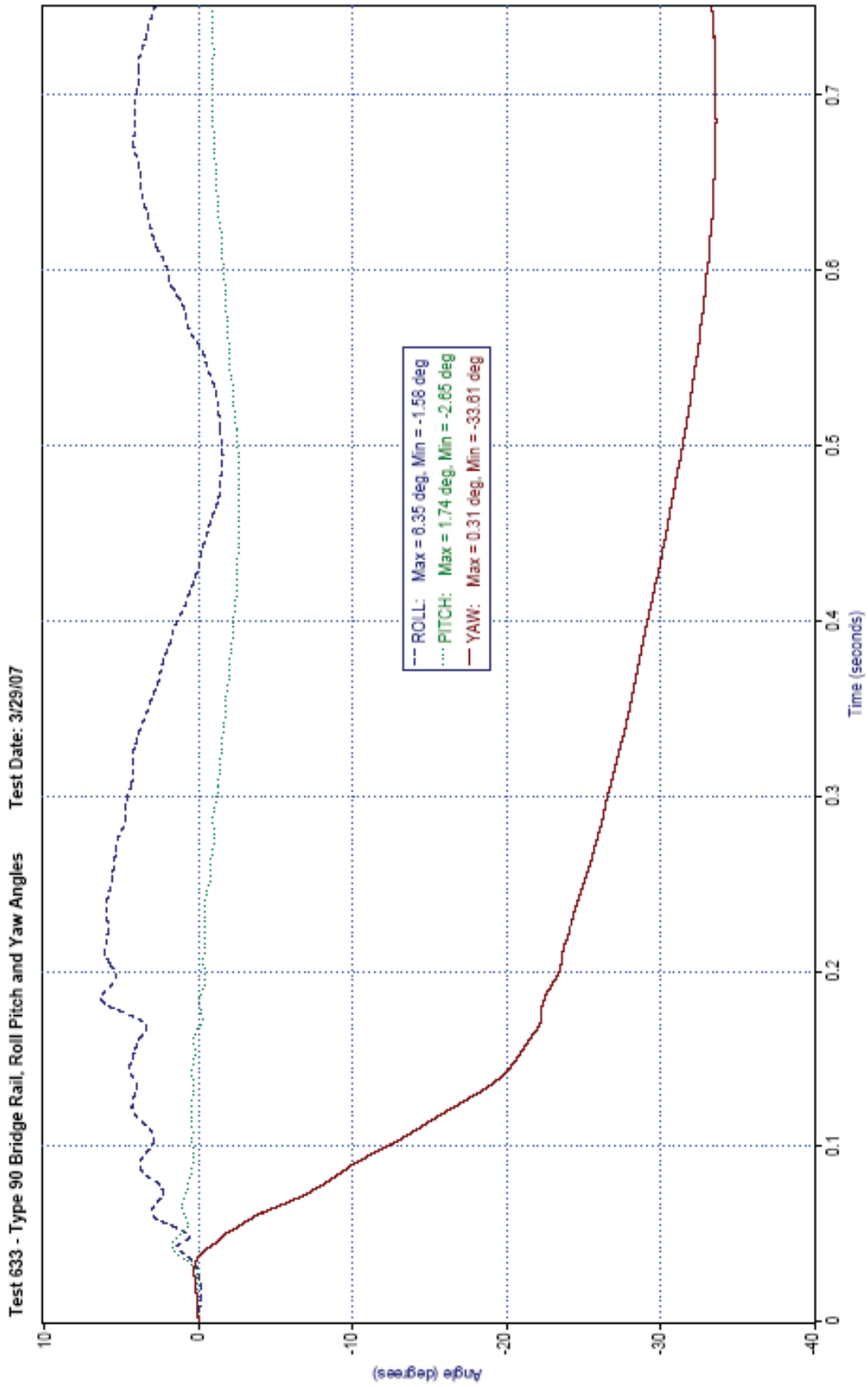

Figure 7-18 – Test 633 Vehicle Roll, Pitch, and Yaw Vs Time

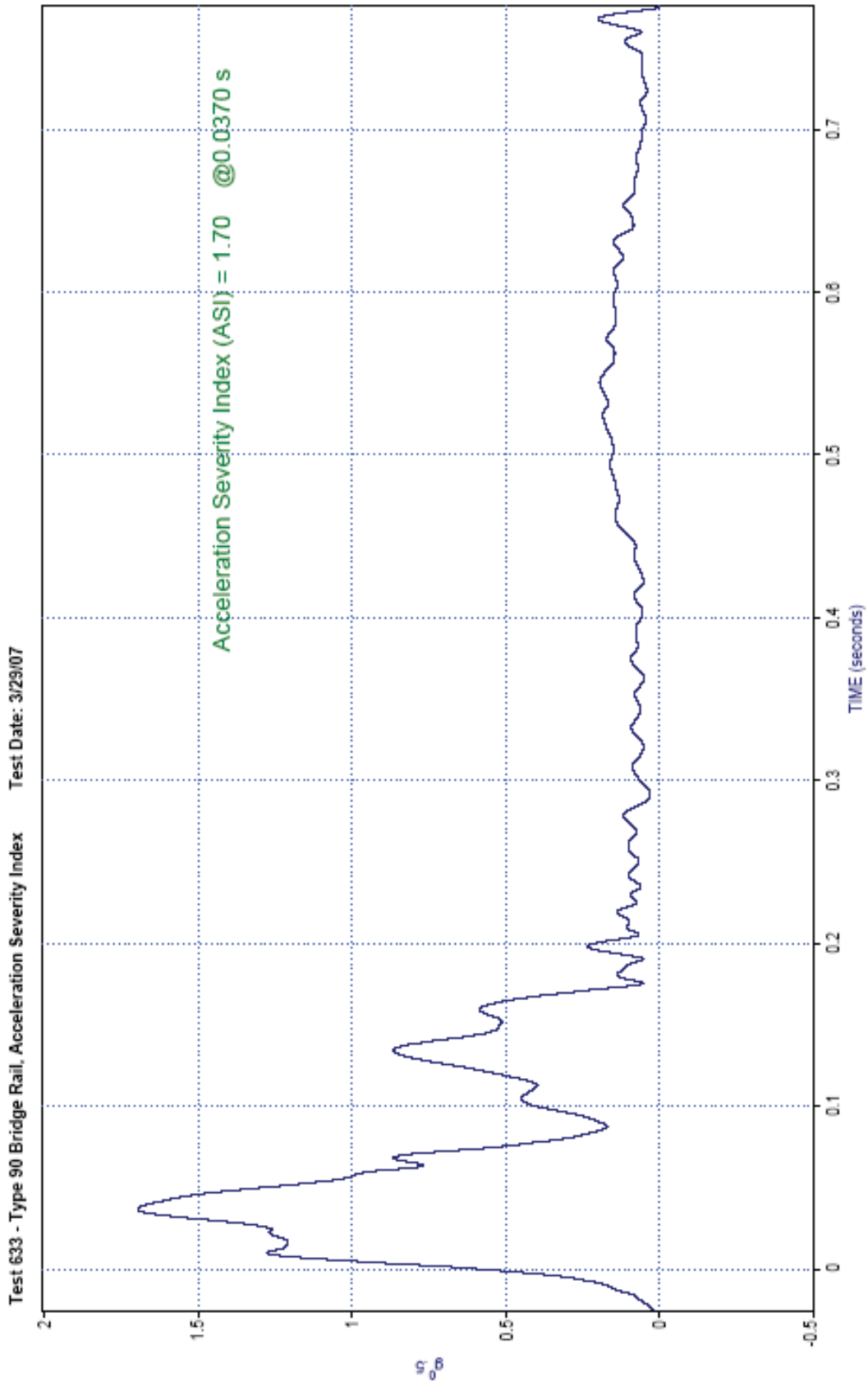

Figure 7-19 – Test 633 Vehicle Acceleration Severity Index (ASI) Vs Time

7.5 Detailed Drawings

The following two pages are proposed standard plan drawings of the Type 90 and were produced by the designers at Caltrans, Structures Design. Please contact Caltrans, Structures Design for the most current and complete plans.

California Department of Transportation
Engineering Service Center
Structures Design
1801 30th Street
Sacramento, CA 95816

Tillat Satter
Telephone: (916) 227-8676

This page intentionally left blank.

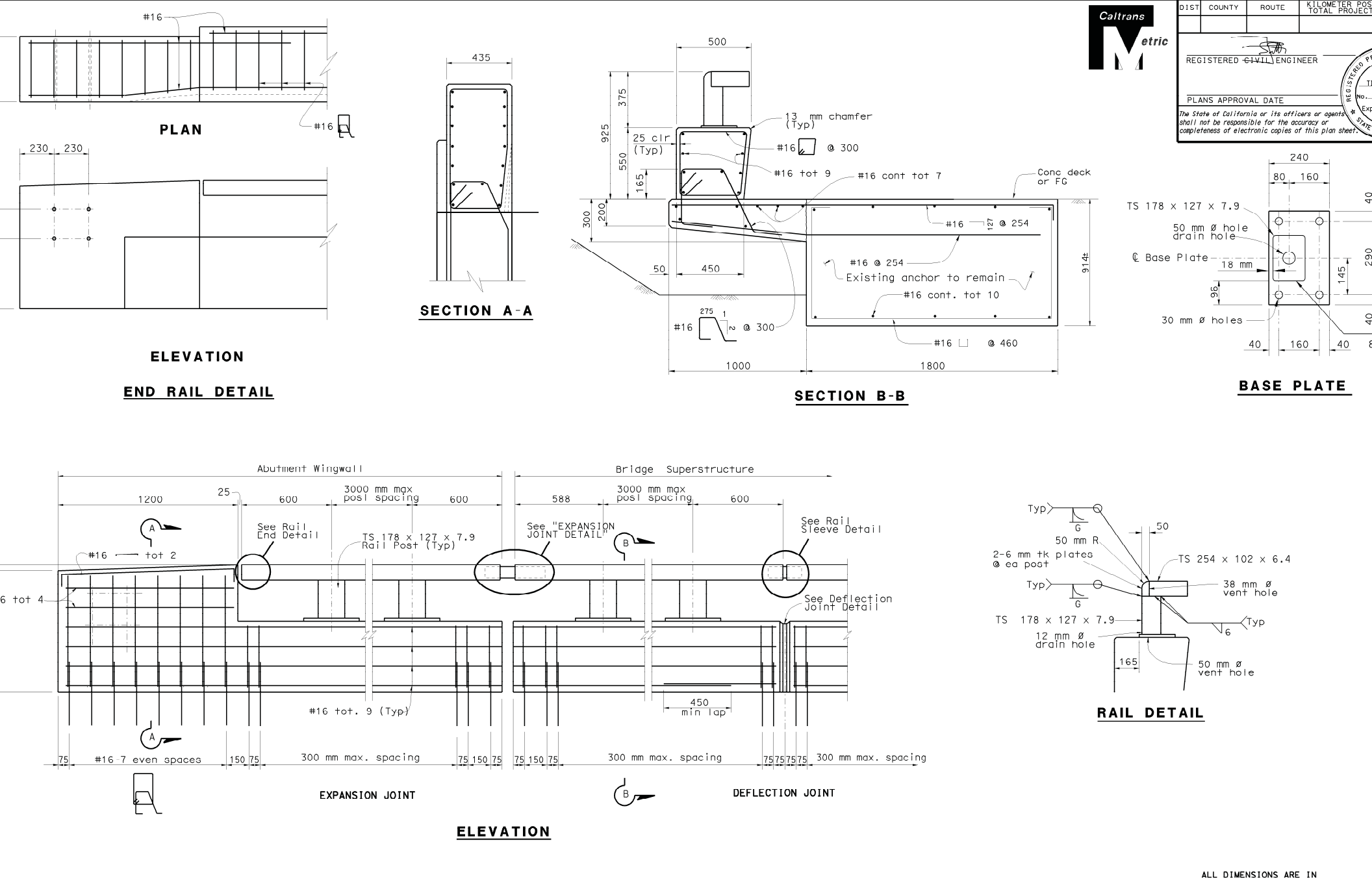

Figure 7-20 – Type 90 Details

Caltrans Metric

DIST	COUNTY	ROUTE	KILOMETER POST TOTAL PROJECT

REGISTERED CIVIL ENGINEER

PLANS APPROVAL DATE

The State of California or its officers or agents shall not be responsible for the accuracy or completeness of electronic copies of this plan sheet.

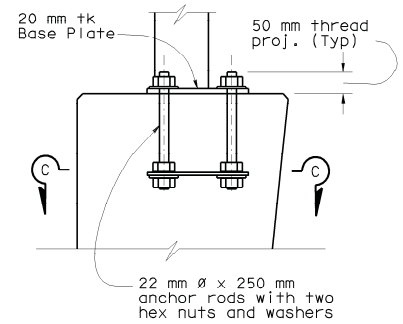

ANCHOR DETAIL

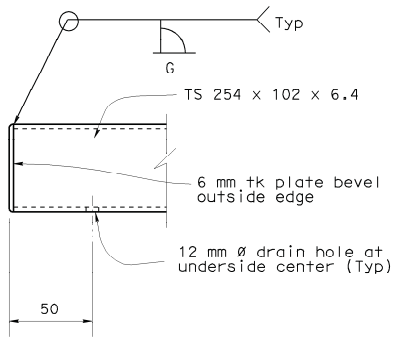

RAIL END DETAIL

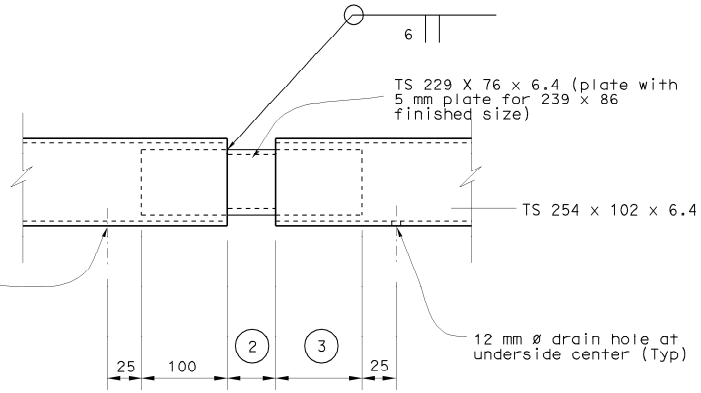

(2) 25 mm at Deflection Joints. At Expansion Joints the space shall be 25 mm larger than the bridge expansion joint.

(3) 100 mm at Deflection Joints and 200 mm at Expansion Joints

EXPANSION JOINT DETAIL

(DEFLECTION JOINT AS NOTED)

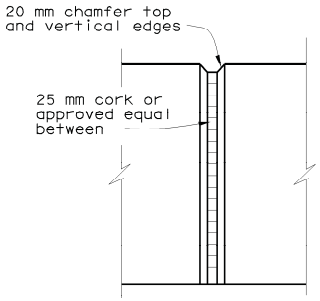

Deflection Joint Det

(IF REQUIRED)

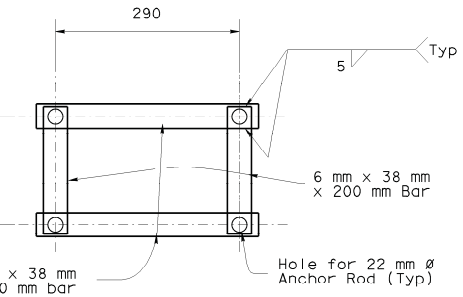

SECTION C-C

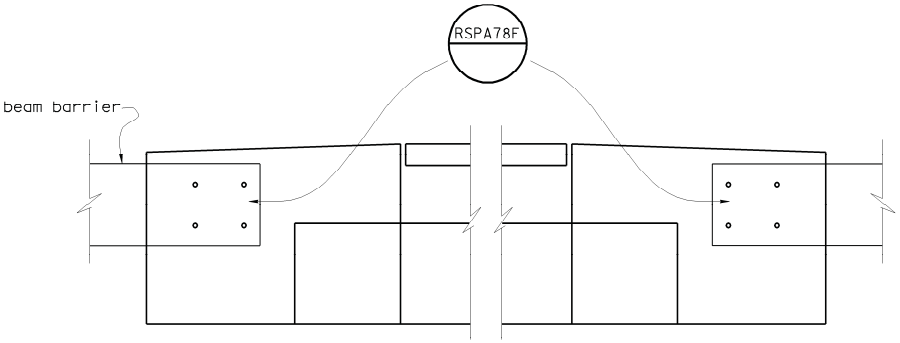

THRIE BEAM BARRIER CONNECTION AT END OF RAILING

MATERIAL

A) All structural steel shall be A36, structural tubing shall be A500 Grade B except as noted.

B) All bolts shall be high strength conforming to ASTM A325 galvanized and snug tight.

C) Stud bolts shall be ASTM A108 and torque to 100 Ft Lbs

GENERAL NOTES

1) Length of railing for payment shall be measured between the outside faces of the concrete rail.

2) Length of tubular rail for payment shall be measured from end to end of tubing with no deduction for joints.

3) Concrete deflection joints shall be spaced approximately 6 M. For expansion joints see superstructure sheet.

4) Post anchorages shall be accurately placed and supported to provide correct alignment of railing normal to grade.

5) All steel shall be galvanized after fabrication. See special provision for paint requirements.

ALL DIMENSIONS ARE IN MILLIMETERS UNLESS OTHERWISE SHOWN

	BY	CHECKED
DESIGN	Nahed Abdin	
DETAILS	P Wells	Tony Dudsak
QUANTITIES	Tony Dudsak	Paul Wells

STATE OF CALIFORNIA
DEPARTMENT OF TRANSPORTATION

DIVISION OF STRUCTURES
STRUCTURE DESIGN
SPECIAL DESIGNS BRANCH

BRIDGE NO.
KILOMETER POST

TYPE 90 CONCRETE BARRIER T
MISCELLANEOUS DETAI

DETAIL SHEET (METRIC) (REV. 3/1/99)

ORIGINAL SCALE IN MILLIMETERS FOR REDUCED PLANS 0 10 20 30 40 50 60 70 80 90 100

CU
EA

DISREGARD PRINTS BEARING EARLIER REVISION DATES

REVISION DATES (PRELIMINARY STAGE ONLY)
10/14/05

spec des br std/barriers_sndwls/

FILE => bar90test03.dgn

Figure 7-21. Cross section and attachment detail for the Type 90