DEPARTMENT OF TRANSPORTATION
DIVISION OF ENGINEERING SERVICES
Office of Structural Materials
Quality Assurance and Source Inspection

Bay Area Branch
690 Walnut Ave.St. 150
Vallejo, CA 94592-1133
(707) 649-5453
(707) 649-5493

Contract #: 04-0120F4
Cty: SF/ALA Rte: 80 PM: 13.2/13.9
File #: 69.25B

QUALITY ASSURANCE -- NON-CONFORMANCE REPORT

Location: Changxing Island, Shanghai, PRC **Report No:** NCR-000214
Prime Contractor: American Bridge/Fluor Enterprises, a JV **Date:** 18-Nov-2008
Submitting Contractor: Zhenhua Port Machinery Company, Ltd (ZPMC), Changxing Island **NCR #:** ZPMC-0190

Type of problem:

Welding	☑	**Concrete**	☐	**Other**	☐	
Welding	☑	**Curing**	☐	**Procedural**	☐	**Bridge No:** 34-0006
Joint fit-up	☐	**Coating**	☐	**Other**	☐	**Component:** Stiffeners and Skin Plates
Procedural	☐	**Procedural**	☐	**Description:**	East Shaft, Lift 1 and South Shaft, Lift 1	

Reference Description: AWS D1.5 2002

Description of Non-Conformance:

ZPMC has built up the base metal at the ends of the stiffeners and the skin plates on both East and South shafts in excess of 20mm. Weld build up "greater than twice the thickness of the thinner part or 20 mm [3/4 in.], whichever is less" must be approved by the Engineer. This condition exists on all the stiffeners of all skin plates and the ends of the skin plates of the East and South shafts of Lift 1.

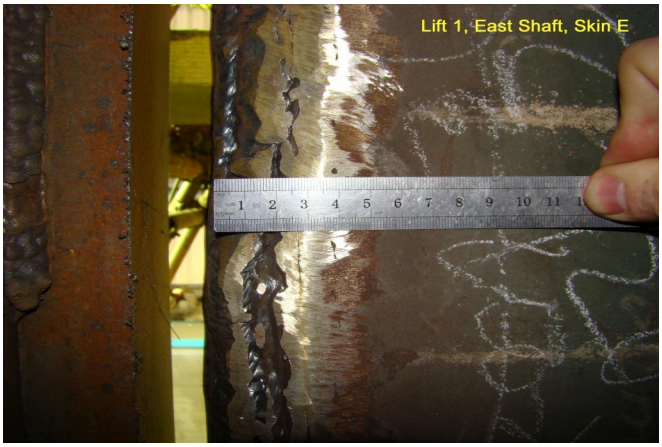

QUALITY ASSURANCE -- NON-CONFORMANCE REPORT

(Continued Page 2 of 2)

Applicable reference:
Section 3.3.4.1 and 3.3.4.2, AWS D1.5 2002.

3.3.4.1 Root openings wider than those allowed in 3.3.4, but not greater than twice the thickness of the thinner part or 20 mm [3/4 in.], whichever is less, may be corrected by welding to acceptable dimensions prior to joining the parts by welding.

3.3.4.2 Root openings larger than those allowed in 3.3.4.1 may be corrected by welding only with the approval of the Engineer.

Who discovered the problem: William Clifford, Quality Assurance Inspector
Name of individual from Contractor notified: Dan Raynor
Time and method of notification: 11/18/08; 1245; Verbal
Name of Caltrans Engineer notified: Doug Coe
Time and method of notification: None
QC Inspector's Name: 11/18/08;1230;Verbal
Was QC Inspector aware of the problem: ☐ **Yes** ☑ **No**
Contractor's proposal to correct the problem:
ZPMC will mill the built up areas to less 20mm.
Comments:
This report is for the purpose of determining conformance with the contract documents and is not for the purpose of making repair or fit for purpose recommendations. Should you require recommendations concerning repairs or remedial efforts please contact Ryan Smith, who represents the Office of Structural Materials for your project.

Inspected By:	Ishibashi,Josh	SMR
Reviewed By:	Smith,Ryan	SMR

DEPARTMENT OF TRANSPORTATION - District 4 Toll Bridge
333 Burma Road
Oakland CA 94607
Tel: Fax:

NON-CONFORMANCE REPORT TRANSMITTAL

To:	AMERICAN BRIDGE/FLUOR, A JV 375 BURMA ROAD OAKLAND CA 95607	**Date:**	19-Nov-2008
		Contract No:	04-0120F4 04-SF-80-13.2 / 13.9
Dear:	Mr. Charles Kanapicki	**Job Name:**	SAS Superstructure
Attention:	Mr. Dave Williams Consultant	**Document No:**	05.03.06-000184
Subject:	NCR No. ZPMC-0190		

Reference Description: Weld Build Up / East and South Tower Shaft Lift 1

The attached Non-Conformance Report describes an occurrence where the contractor did not comply with a requirement of the contract document as indicated below:

- ☑ Material or Workmanship not in conformance with contract documents.
- ☑ Quality Control (QC) not performed in conformance with contract documents.
- ☐ Recurring QC issue that constitutes a systematic problem in quality control.
- ☐ Non-Conformance Resolved.

Material Location: Tower **Lift:** 01

Remarks:

ZPMC has built up the base metal at the ends of the stiffeners and the skin plates on both East and South shafts in excess of 20mm. Weld build up "greater than twice the thickness of the thinner part or 20 mm [3/4 in.], whichever is less" must be approved by the Engineer. This condition exists on all the stiffeners of all skin plates and the ends of the skin plates of the East and South shafts of Lift 1.

Action Required and/or Action Taken:

Propose a resolution for the identified non-conformance including documentation of the procedures and steps taken to bring the weldment placed into compliance with the contract requirements. In addition to the material/workmanship non-conformance, propose a resolution that addresses the apparent failure of Quality Control to identify the non-conformance with AWS D1.5. Provide documentation of the steps taken by the Quality Control Manager to prevent future occurrences.

Transmitted by: Scott Kennedy Sr. Bridge Engineer

Attachments: ZPMC-0190

cc: Rick Morrow, Gary Pursell, Mark Woods, Doug Coe

File: 05.03.06

AMERICAN BRIDGE/FLUOR ENTERPRISES, a JV
P.O. BOX 23223 Oakland, CA 94623
Phone (510) 419-0120 / Fax (510) 839-0666

NCR PROPOSED RESOLUTION

To: CALTRANS - SAS Superstructure
333 Burma Road
Oakland CA 94607

Attention: Pursell, Gary
Resident Engineer

Ref: 05.03.06-000184

Subject: NCR No. ZPMC-0190

Dated: **24-Nov-2008**

Contract No.: 04-0120F4
04-SF-80-13.2 / 13.9

Job Name: SAS Superstructure

Document No.: **ABF-NPR-000181 Rev: 00**

Contractor's Proposed Resolution:

Reference Resolution: These edges are to be machined down to meet dimensional tolerances for length and MT inspected after machining.

ZPMC exceeded the maximum allowable weld build up without Engineers approval. These edges are to be machined down to meet dimensional tolerances for length and MT inspected after machining. ZPMC production considered this acceptable since the weld will be machined later. ZPMC did however document the weld build up on a Welding Repair Report and will subsequently document the MT inspection after machining.

Submitted by:

Attachment(s): ABF-NPR-000181R00

Caltrans' comments:

Status: REJ

Date: 14-Jan-2009

The proposed resolution is not acceptable. This Non-Conformance, along with the issue of weld parameters / excessive bead width during buttering as documented in Non-Conformance ZPMC-0184, gives the Department cause for concern about the quality of the weld build-up. The proposal to grind and MT the weld build-up area is not sufficient, and more extensive testing than MT is necessary to ensure the quality of the weld.

Example of the types of testing that the Department would consider sufficient to ensure the quality of the weld build-up includes:
- Ultrasonic Testing (UT) of the weld build-up prior to welding of the Tower shaft to the base plate.
- Hardness tests between the base metal and the welded area.
- Magnetic Particle (MT) testing of the weld build-up.

Please propose a resolution with a Request for Information that includes the types and amount of testing proposed to ensure the quality of the weld, and clear this Non-Conformance.

If you have any questions regarding this matter, please contact the Department's representatives in Shanghai.

Submitted by: Wright, Doug

Date: 14-Jan-2009

Attachment(s):

AMERICAN BRIDGE/FLUOR ENTERPRISES, a JV
P.O. BOX 23223 Oakland, CA 94623
Phone (510) 419-0120 / Fax (510) 839-0666

NCR PROPOSED RESOLUTION

To: CALTRANS - SAS Superstructure
333 Burma Road
Oakland CA 94607

Attention: Pursell, Gary
Resident Engineer

Ref: 05.03.06-000184

Subject: NCR No. ZPMC-0190

Dated: **17-Mar-2009**

Contract No.: 04-0120F4
04-SF-80-13.2 / 13.9

Job Name: SAS Superstructure

Document No.: **ABF-NPR-000181 Rev: 01**

Contractor's Proposed Resolution:

Reference Resolution: Originally a WRR was generated for Skin A and E. Skin E required more weld and would exceed 20mm. At that time a CWR was generated and approved.

Attached is information that ZPMC did have a CWR for weld build up over 20mm. Originally a WRR was generated for Skin A and E. Skin E required more weld and would exceed 20mm. At that time a CWR was generated and approved. ZPMC QC have been notified about the importance to have the appropriate documents on site during welding and repair welding.

Submitted by:

Attachment(s): ABF-NPR-000181R01;

Caltrans' comments:

Status: REJ

Date: 15-Apr-2009

The proposed resolution is not acceptable. There were inconsistencies with the hardness testing results included in NPR-0185R01, and the hardness sampling locations could not be identified. Please coordinate with the Department's representatives in Shanghai for hardness testing in the presence of the Engineer.

Submitted by: Wright, Doug

Date: 15-Apr-2009

Attachment(s):

ZPMC	关键焊缝返修报告 Critical Welding Repair Report (CWR)	版本 Rev. No. 0

项目名称 Project Name	美国海湾大桥 SFOBB	部件图号 Drawing No	南塔第一吊装段 South Tower first lifting	报告编号 Report No.	T-CWR031
合同号 Contract No.:	04-0120F4	部件名称 Item Name:	SKIN E	NDT报告编号 NDT Report No.:	
项目编号 Project No.:	ZP06-787				

焊缝缺陷描述：

Description of Welding Discontinuity:

参照检查报告，南塔第一吊装段E面板底部端部需整体堆焊27~32.5mm。

According to inspection report, it needs to build up 27-32.5mm of bottom side of Skin E.

检验员（Inspector）：Liu Yang Liu Yang　　日期(Date)：08.11.04 08.11.04

☑ APPROVED
☐ APPROVED AS NOTED
☐ RETURNED FOR CORRECTION
Pursuant to Section 5-1.02
of the Standard Specifications
State of California
DEPARTMENT OF TRANSPORTATION
Division of Engineering Service
Office of Structure Construction
Structure Representative　　11/5/08 Date

焊缝返修位置示意图：

Draft of Welding Discontinuity:

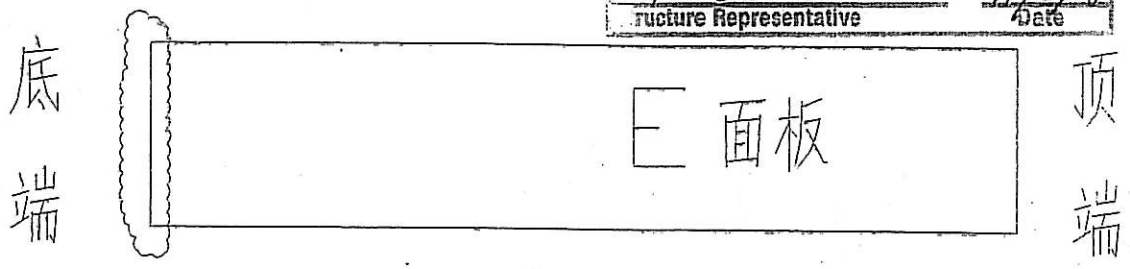

注：云线区域为堆焊部位

Remark: repair area in cloudy

ABF QCM 5 Nov. 08

产生原因:

Cause:

1.由于焊接及面板平整度校正后产生的收缩导致板单元实际尺寸小于理论尺寸.

1. Weld contraction after welding and heat straightening caused that actually size was shorier than theory size.

Liu Hengcheng 2008. 11. 4

车间负责人(Foreman):Liu Hengcheng 日期(Date):11.4

处理意见

Disposition:

1、Grind the building-up area;

2、Preheat and weld passes temperature according to the approved WPS, it should be 2-3mm than the theory size;

3、Grind the weld area smoothly after repairing;

4、Perform 100%MT and 100%UT to the repair area.

1、对需堆焊部分进行打磨;

2、按批准后焊接工艺规程 WPS 要求进行预热和控制道间温度,进行堆焊,略高于理论值 2～3mm,视情况可加钢衬垫;

3、施焊完毕后将施焊位置打磨平整并去除钢衬垫;

4、对修补区域做 100%MT+100%UT.

☑ APPROVED
☐ APPROVED AS NOTED
☐ RETURNED FOR CORRECTION
Pursuant to Section 5-1.02
of the Standard Specifications
State of California
DEPARTMENT OF TRANSPORTATION
Division of Engineering Service
Office of Structure Construction
Structure Representative 11/5/08 Date

工 艺: Zhang Jingdong 审核: 日期

Technical engineer: Approved by Date: 2008.11.04

ZPMC	关键焊缝返修报告 Critical Welding Repair Report (CWR)			版本 Rev. No. 0
项目名称 Project Name	美国海湾大桥 SFOBB	部件图号 Drawing No	南塔第一吊装段 South Tower first lifting	报告编号 Report No.	T-CWR031
合同号 Contract No.:	04-0120F4	部件名称 Item Name:	SKIN E	NDT报告编号 NDT Report No.:	
项目编号 Project No.:	ZP06-787				

纠正措施:

Correction Action To Prevent Re-Occurrence:

1.提高焊接质量，保证面板平整度，尽量减少在面板校正后产生的收缩.

1. Improve welding quality and ensure flatness to reduce heat straightening and welding contraction.

车间负责人(Foreman): Liu Hengcheng　　日期(Date): 2008.11.4 11.4

参照的WPS编号 Repair WPS No.	WPS-345-FCAW-2G (2F)-Repair ✓ WPS-345-FCAW-3G(3F)-Repair ✓ WPS-345-SMAW-2G (2F)-Repair WPS-345-SMAW-3G (3F)-Repair ✓ WPS-345-FCAW-4G(4F)-Repair WPS-345-SMAW-4G (4F)-Repair	工艺员 technologist	Zhang Tongdong 2008.11.04
返修（碳刨）前预热温度 Preheat temperature before gouging	NA	返修的缺陷 Description of discontinuity	足寸不足，增加焊
焊前处理检查 Inspection before welding	VT/MU	焊前预热温度 Preheat temperature before welding	208°c
最大碳刨深度 Max. depth of gouging	NA	碳刨总长 Total length of gouging	NA
焊工 welder	040457 057194 040462 052870 040434 048627	焊接类型 welding type FCAW	焊接位置 position H ✓
焊接电流 Current	H: 185~210 V: 300~310	焊接电压 Voltage	242~26 300~315	焊接速度 Speed	105~116 305~312

返修后检查
Inspection After repairing:

外观检查 VT result	检验员 Inspector	☑ APPROVED ☐ APPROVED AS NOTED ☐ RETURNED FOR CORRECTION Pursuant to Section 5-1.02 of the Standard Specifications D State of California DEPARTMENT OF TRANSPORTATION Division of Engineering Services Office of Structure Construction
NDT复检 NDT result	探伤员 NDT person	
见证： Witness/Review:		Structure Representative　　Date 11/5/08

ZPMC	焊缝返修报告 Welding Repair Report				版本 Rev. No. 0
项目名称 Project Name	美国海湾大桥 SFOBB	部件图号 Drawing No	ESD1-SA237 ESD1-SA227	报告编号 Report No.	T-WR336
合同号 Contract No.:	04-0120F4	部件名称 Items Name	东塔第一吊装段 A.E面板East Tower first lifting Skin A and E	NDT报告编号 Report No.of NDT	
项目编号 Project No.:	ZP06-787				

缺陷描述

Description of welding discontinuity:

根据工艺要求，对A.E面板底部进行堆焊，其中A面板端部堆焊4mm，E面板底部堆焊17mm，具体见下图。

According to technology requirement, end of Skin A and Skin E need building-up, build 4mm up of Skin A, build 17mm up of Skin E, the detail see the following draft.

检验员（Inspector）：Xu JinLong 日期(Date)：08.10.19

焊缝返修位置示意图：

Draft of welding discontinuity:

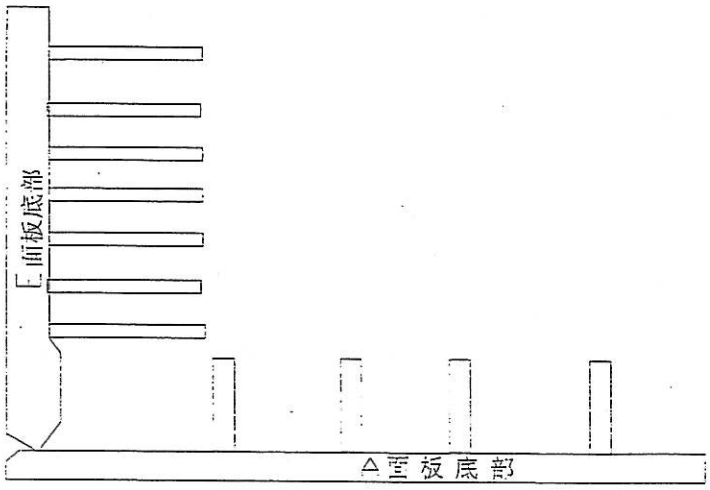

注：A面板及纵向筋底部均堆焊4mm，E面板及纵向筋底部均堆焊17mm

产生原因:

Caused:

1.由于焊接和校火收缩，导致A.E面板比要求的尺寸小。

1. Weld and Heat straighten contraction causing size shorter.

车间负责人(Foreman): Lu Haidong 日期(Date): 18.10.20

处理意见

Disposition:

1、Grind the building-up area;

2、Preheat and weld passes temperature according to the approved WPS, it should be 2-3mm than the theory size;

3、Grind the weld area smoothly after repairing;

4、Perform 100%MT and 100%UT to the repair area.

1、对需堆焊部分进行打磨;

2、按批准后焊接工艺规程 WPS 要求进行预热和控制道间温度,进行堆焊,略高于理论 2～3mm;

3、施焊完毕后将施焊位置打磨平整;

4、对修补区域做 100%MT+100%UT.

工 艺: HeShufeng 10.20 审核: 日期

Technical engineer Approved by Date

ZPMC	焊缝返修报告 Welding Repair Report	版本 Rev. No. 0

项目名称 Project Name	美国海湾大桥 SFOBB	部件图号 Drawing No.	ESD1-SA237 ESD1-SA227	报告编号 Report No.	T-WR336
合同号 Contract No.:	04-0120F4	部件名称 Items Name	东塔第一吊装段 A.E 面板East Tower first lifting Skin A and E	NDT报告编号 Report No.of NDT	
项目编号 Project No.:	ZP06-787				

纠正措施:

Correction action to prevent re occurrence:

1.尽量减少校火次数，严格按照WPS和工艺要求制作。

1. Try to reduce heat straightening time, and perform according to WPS and technology requirement to fabrication.

车间负责人(Foreman): Lu Haidong 日期(Date): 08.10.20

参照的WPS编号 Repair WPS No.	WPS-345-FCAW -2G (2F)-Repair WPS-345-FCAW -3G(3F)-Repair WPS-345-SMAW -2G (2F)-Repair WPS-345-SMAW -3G (3F)-Repair	工艺员 technologist	Haidong 10.20
返修（碳刨）前预热温度 Preheat temperature before gouging	NA	返修的缺陷 Description of discontinuity	NA.
焊前处理检查 Inspection before welding	Grinding	焊前预热温度 Preheat temperature before welding	>160°C <230°C
最大碳刨深度 Max. depth of gouging	NA	碳刨总长 Total length of gouging	NA.

焊工 welder	04.0736/066471 06T876/049220	焊接类型 welding type	FCAW SMAW	焊接位置 position	H (2G) V (3G).
焊接电流 Current	296A (2G FCAW) 190A (3G FCAW) 150A (3G SMAW)	焊接电压 Voltage	29.2 (2G FCAW) 25 (3G FCAW) 25 (3G SMAW)	焊接速度 Speed	280 mm/min (2G FCAW) 110 mm/min (3G FCAW) 110 mm/min (3G SMAW)

返修后检查

Inspection After repairing:

外观检查 VT result	检验员 Inspector	日期 Date
NDT复检 NDT result	探伤员 NDT person	日期 Date

见证：

Witness/Review:

备注：

Remark：

ZPMC	焊缝返修报告 **Welding Repair Report**	版本 Rev. No. **0**

项目名称 Project Name	美国海湾大桥 SFOBB	部件图号 Drawing No	ESD1-SA233A/F	报告编号 Report No.	T-WR389
合同号 Contract No.:	04-0120F4	部件名称 Items Name	Skin B	NDT报告编号 Report No.of NDT	
项目编号 Project No.:	ZP06-787				

缺陷描述

Description of welding discontinuity:

参照测量数据，东塔第一吊装段B面板底部需整体堆焊12－14mm。

According to measuring data, Skin B bottom needs to build up 12-14mm.

检验员（Inspector）：Li Bin (Date)：08.11.04

焊缝返修位置示意图：

Draft of welding discontinuity:

注：云线处为堆焊部位（包括纵向筋末端）。

Remark: repair area in cloudy including end of stiffeners.

产生原因:

Caused:

在焊接的过程中五块面板的收缩量不一致，导致装配成型后，塔底端部不在同一个平面上。

In the welding process, weld contraction of five plates was conformity caused the tower bottom was not on the same of flat surface after assembly.

车间负责人(Foreman): Bian Ning 日期(Date): 2008.11.05

处理意见

Disposition :

1、 Grind the building-up area;
2、 Preheat and weld passes temperature according to the approved WPS, it should be 2-3mm than the theory size;
3、 Grind the weld area smoothly after repairing;
4、 Perform 100%MT and 100%UT to the repair area.

1、 对需堆焊部分进行打磨;
2、 按批准后焊接工艺规程 WPS 要求进行预热和控制道间温度,进行堆焊，略高于理论值 2～3mm，视情况可加钢衬垫;
3、 施焊完毕后将施焊位置打磨平整并去除钢衬垫;
4、 对修补区域做 100%MT+100%UT.

工 艺: Zhangjinhong 08.05/08 审核: 日期

Technical engineer Approved by Date

ZPMC	焊缝返修报告 Welding Repair Report	版本 Rev. No. 0

项目名称 Project Name	美国海湾大桥 SFOBB	部件图号 Drawing No.	ESD1-SA233A/F	报告编号 Report No.	T-WR389
合同号 Contract No.:	04-0120F4	部件名称 Items Name	Skin B	NDT报告编号 Report No.of NDT	
项目编号 Project No.:	ZP06-787				

纠正措施:

Correction action to prevent re occurrence:

A、E面板上联系横梁的孔暂不切割，待纵向筋与面板焊接完成后，根据实际收缩量切出相应的孔。

It didn't cut the hole on Skin A and E strut plate, cut the hole according to actually welding contr action after finishing welding skin plate & stiffeners.

车间负责人(Foreman): Bian Ning 日期(Date): 08.11.05

参照的WPS编号 Repair WPS No.	WPS-345-FCAW -2G (2F)-Repair WPS-345-FCAW -3G(3F)-Repair WPS-345-SMAW -2G (2F)-Repair WPS-345-SMAW -3G (3F)-Repair WPS-345-SMAW -4G (4F)-Repair	工艺员 technologist	Zhong jia dong 11.5/08
返修（碳刨）前预热温度 Preheat temperature before gouging	NA	返修的缺陷 Description of discontinuity	堆焊
焊前处理检查 Inspection before welding	ACC	焊前预热温度 Preheat temperature before welding	186
最大碳刨深度 Max. depth of gouging	NA	碳刨总长 Total length of gouging	NA

焊工 welder 667500	焊接类型 welding type FCAW	焊接位置 position 3G
焊接电流 Current 204	焊接电压 Voltage 26.4	焊接速度 Speed 116

返修后检查

Inspection After repairing:

外观检查 VT result	检验员 Inspector	日 期 Date
NDT复检 NDT result	探伤员 NDT person	日 期 Date

见证：
Witness/Review:

备注：
Remark：

ZPMC	焊缝返修报告 Welding Repair Report				版本 Rev. No. 0
项目名称 Project Name	美国海湾大桥 SFOBB	部件图号 Drawing No	ESD1-SA294A/G	报告编号 Report No.	T-WR390
合同号 Contract No.:	04-0120F4	部件名称 Items Name	Skin C	NDT报告编号 Report No.of NDT	
项目编号 Project No.:	ZP06-787				

缺陷描述

Description of welding discontinuity:

参照测量数据，东塔第一吊装段C面板底部需整体堆焊13mm。

According to measuring data, Skin C bottom needs to build up13mm.

检验员（Inspector）：Li Bin (Date)：08.11.04

焊缝返修位置示意图：

Draft of welding discontinuity:

注：云线处为堆焊部位(包括承压板及纵向筋端部)。

Remark: repair area in cloudy including end of strut plates and stiffeners

产生原因:

Caused:

在焊接的过程中五块面板的收缩量不一致，导致装配成型后，塔底端部不在同一个平面上。

In the welding process, weld contraction of five plates was conformity caused the tower bottom was not on the same of flat surface after assembly.

车间负责人(Foreman): Bian Ning 日期(Date): 2008.11.05

处理意见

Disposition :

1、 Grind the building-up area;
2、 Preheat and weld passes temperature according to the approved WPS, it should be 2-3mm than the theory size;
3、 Grind the weld area smoothly after repairing;
4、 Perform 100%MT and 100%UT to the repair area.

1、 对需堆焊部分进行打磨;
2、 按批准后焊接工艺规程 WPS 要求进行预热和控制道间温度,进行堆焊，略高于理论值 2～3mm，视情况可加钢衬垫;
3、 施焊完毕后将施焊位置打磨平整并去除钢衬垫;
4、 对修补区域做 100%MT+100%UT.

工 艺: zhangjindong 11.5/08 审核: 日期

Technical engineer Approved by Date

ZPMC	焊缝返修报告 Welding Repair Report	版本 Rev. No. 0

项目名称 Project Name	美国海湾大桥 SFOBB	部件图号 Drawing No.	ESD1-SA294A/G	报告编号 Report No.	T-WR390
合同号 Contract No.:	04-0120F4	部件名称 Items Name	Skin C	NDT报告编号 Report No.of NDT	
项目编号 Project No.:	ZP06-787				

纠正措施:

Correction action to prevent re occurrence:

A、E面板上联系横梁的孔暂不切割，待纵向筋与面板焊接完成后，根据实际收缩量切出相应的孔。

It didn't cut the hole on Skin A and E strut plate, cut the hole according to actually welding contr action after finishing welding skin plate & stiffeners.

车间负责人(Foreman): Bian Ning 日期(Date): 08.11.05

参照的WPS编号 Repair WPS No.	WPS-345-FCAW -2G (2F)-Repair WPS-345-FCAW -3G(3F)-Repair WPS-345-SMAW -2G (2F)-Repair WPS-345-SMAW -3G (3F)-Repair WPS-345-SMAW -4G (4F)-Repair	工艺员 technologist	Zhangqindong 11.5/08
返修（碳刨）前预热温度 Preheat temperature before gouging	N.A.	返修的缺陷 Description of discontinuity	堆焊
焊前处理检查 Inspection before welding	Acc.	焊前预热温度 Preheat temperature before welding	185
最大碳刨深度 Max. depth of gouging	N.A.	碳刨总长 Total length of gouging	N.A.

焊工 welder 067500	焊接类型 welding type FCAW	焊接位置 position V
焊接电流 Current 209	焊接电压 Voltage 26.6	焊接速度 Speed 120

返修后检查

Inspection After repairing:

外观检查 VT result	检验员 Inspector	日 期 Date
NDT复检 NDT result	探伤员 NDT person	日 期 Date

见证：
Witness/Review:

备注：
Remark：

ZPMC	焊缝返修报告 **Welding Repair Report**	版本 Rev No. **0**

项目名称 Project Name	美国海湾大桥 SFOBB	部件图号 Drawing No	ESD1-SA296A/E	报告编号 Report No.	T-WR391
合同号 Contract No.:	04-0120F4	部件名称 Items Name	Skin D	NDT报告编号 Report No.of NDT	
项目编号 Project No.:	ZP06-787				

缺陷描述

Description of welding discontinuity:

参照测量数据，东塔第一吊装段D面板底部需整体堆焊6－12mm。

According to measuring data, Skin D bottom needs to build up 6-12mm.

Li Bin

检验员（Inspector）：Li Bin (Date)：08.11.04

焊缝返修位置示意图：

Draft of welding discontinuity:

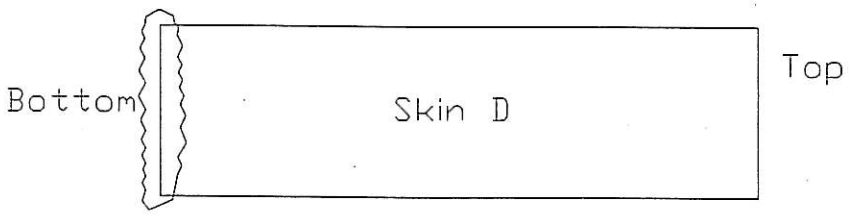

注：云线处为堆焊部位(包括承压板及纵向筋端部)。

Remark: repair area in cloudy including strut plates and stiffeners

产生原因:

Caused:

在焊接的过程中五块面板的收缩量不一致，导致装配成型后，塔底端部不在同一个平面上。

In the welding process, weld contraction of five plates was conformity caused the tower bottom was not on the same of flat surface after assembly.

车间负责人(Foreman): Bian Nang 日期(Date): 2008.11.05

处理意见

Disposition :

1、 Grind the building-up area;
2、 Preheat and weld passes temperature according to the approved WPS, it should be 2-3mm than the theory size;
3、 Grind the weld area smoothly after repairing;
4、 Perform 100%MT and 100%UT to the repair area.

1、 对需堆焊部分进行打磨;
2、 按批准后焊接工艺规程 WPS 要求进行预热和控制道间温度,进行堆焊，略高于理论值 2～3mm，视情况可加钢衬垫;
3、 施焊完毕后将施焊位置打磨平整并去除钢衬垫;
4、 对修补区域做 100%MT+100%UT.

工 艺 zhangjindong 11.5/08 质 检 [illegible]

ZPMC	焊缝返修报告 **Welding Repair Report**	版本 Rev. No. **0**

项目名称 Project Name	美国海湾大桥 SFOBB	部件图号 Drawing No.	ESD1-SA296A/E	报告编号 Report No.	T-WR391
合同号 Contract No.:	04-0120F4	部件名称 Items Name	Skin D	NDT报告编号 Report No.of NDT	
项目编号 Project No.:	ZP06-787				

纠正措施:

Correction action to prevent re occurrence:

A、E面板上联系横梁的孔暂不切割，待纵向筋与面板焊接完成后，根据实际收缩量切出相应的孔。

It didn't cut the hole on Skin A and E strut plate, cut the hole according to actually welding contr action after finishing welding skin plate & stiffeners.

车间负责人(Foreman): Bian Ning 日期(Date): 08.11.05

参照的WPS编号 Repair WPS No.	WPS-345-FCAW -2G (2F)-Repair WPS-345-FCAW -3G(3F)-Repair WPS-345-SMAW -2G (2F)-Repair WPS-345-SMAW -3G (3F)-Repair WPS-345-SMAW -4G (4F)-Repair	工艺员 technologist	zhangjindong 11.5/08
返修（碳刨）前预热温度 Preheat temperature before gouging	N.A.	返修的缺陷 Description of discontinuity	堆焊
焊前处理检查 Inspection before welding	ALL	焊前预热温度 Preheat temperature before welding	180
最大碳刨深度 Max. depth of gouging	NA.	碳刨总长 Total length of gouging	N.A.

焊工 welder 066673	焊接类型 welding type FCAW	焊接位置 position 3G
焊接电流 Current 179	焊接电压 Voltage 25.8	焊接速度 Speed 115

返修后检查
Inspection After repairing:

外观检查 VT result	检验员 Inspector	日 期 Date
NDT复检 NDT result	探伤员 NDT person	日 期 Date

见证：
Witness/Review:

备注：
Remark：

ZPMC	焊缝返修报告 Welding Repair Report				版本 Rev. No. 0
项目名称 Project Name	美国海湾大桥 SFOBB	部件图号 Drawing No	ESD1-SA227	报告编号 Report No.	T-WR346
合同号 Contract No.:	04-0120F4	部件名称 Items Name	东塔第一吊装段 E面板	NDT报告编号 Report No.of NDT	
项目编号 Project No.:	ZP06-787				

缺陷描述

Description of welding discontinuity:

根据工艺联系单GGL-JZGT-656要求，对E面板底部的承压板，端部进行堆焊17mm，具体见下图。

According to the technical sheet GGL-JZGT-656, the bearing plate at the bottom of Skin E shall be surface welded to 17mm from the top.

检验员（Inspector）：XuJinLong 日期(Date)：08.10.26

焊缝返修位置示意图：

Draft of welding discontinuity:

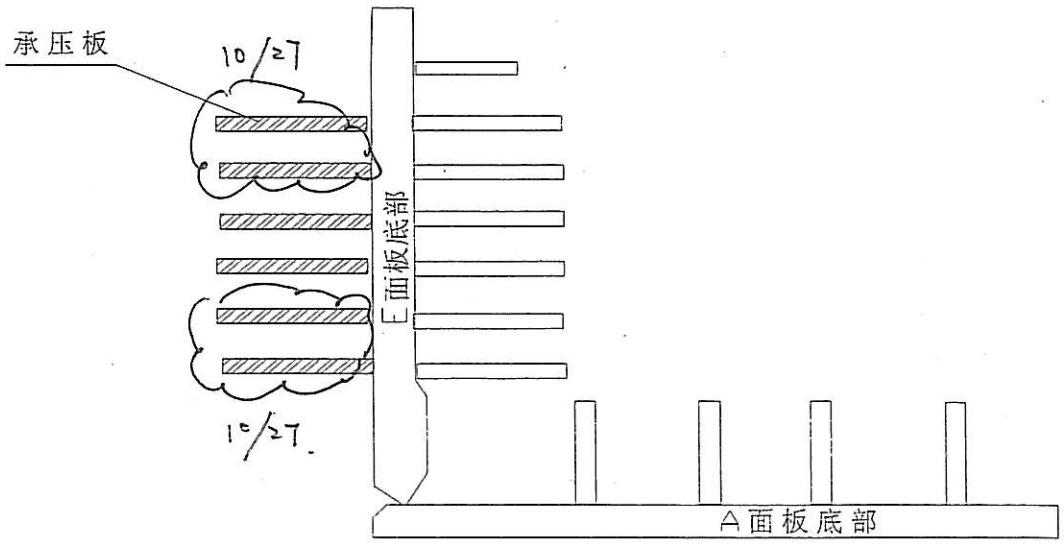

注：E面板底部承压板端部堆焊17mm

产生原因:

Caused:.

由于焊接收缩，导致东塔A,E面板隔板开档尺寸与蓝图尺寸存在一定偏差。

Because of the shrinkage in the process of welding, gap between the center lines of the diaphragms of skin A & E in the east tower is different from the dimension in the shop drawing.

车间负责人(Foreman): Lu Haidong 日期(Date): 2008.10.26

处理意见

Disposition:

1、 Grind the building-up area;

2、 Preheat and weld passes temperature according to the approved WPS, it should be 2-3mm than the theory size;

3、 Grind the weld area smoothly after repairing;

4、 Perform 100%MT and 100%UT to the repair area.

1、 对需堆焊部分进行打磨;

2、 按批准后焊接工艺规程 WPS 要求进行预热和控制道间温度,进行堆焊,略高于理论 2～3mm;

3、 施焊完毕后将施焊位置打磨平整;

4、 对修补区域做 100%MT+100%UT.

工 艺: Zhang jindong 10.26/08 审核: 日期

Technical engineer Approved by Date

ZPMC	焊缝返修报告 Welding Repair Report	版本 Rev. No. 0

项目名称 Project Name	美国海湾大桥 SFOBB	部件图号 Drawing No.	ESD1-SA227	报告编号 Report No.	T-WR346
合同号 Contract No.:	04-0120F4	部件名称 Items Name	东塔第一吊装段 E面板	NDT报告编号 Report No.of NDT	
项目编号 Project No.:	ZP06-787				

纠正措施:

Correction action to prevent re occurrence:

加强焊接过程的控制

Enhance inspection during welding.

车间负责人(Foreman): Lu Haidong 日期(Date): 2008.10.26

参照的WPS编号 Repair WPS No.	WPS-345-FCAW-2G (2F)-Repair WPS-345-FCAW-3G(3F)-Repair WPS-345-SMAW-2G (2F)-Repair WPS-345-SMAW-3G (3F)-Repair	工艺员 technologist	zhangjindong 10.26/08
返修（碳刨）前预热温度 Preheat temperature before gouging	NA	返修的缺陷 Description of discontinuity	NA.
焊前处理检查 Inspection before welding	Grinding	焊前预热温度 Preheat temperature before welding	>160°C & <230°C
最大碳刨深度 Max. depth of gouging	NA.	碳刨总长 Total length of gouging	NA.

焊工 welder 040736	焊接类型 welding type FCAW	焊接位置 position H (2G)
焊接电流 Current 296 A	焊接电压 Voltage 29.3 V	焊接速度 Speed 280 mm/min

返修后检查

Inspection After repairing:

外观检查 VT result	检验员 Inspector	日期 Date
NDT复检 NDT result	探伤员 NDT person	日期 Date

见证：
Witness/Review:

备注：
Remark：

#R787-QCP-900

AMERICAN BRIDGE/FLUOR ENTERPRISES, a JV
P.O. BOX 23223 Oakland, CA 94623
Phone (510) 419-0120 / Fax (510) 839-0666

NCR PROPOSED RESOLUTION

To: CALTRANS - SAS Superstructure
333 Burma Road
Oakland CA 94607

Attention: Pursell, Gary
Resident Engineer

Ref: 05.03.06-000184

Subject: NCR No. ZPMC-0190

Dated: **08-Sep-2009**

Contract No.: 04-0120F4
04-SF-80-13.2 / 13.9

Job Name: SAS Superstructure

Document No.: **ABF-NPR-000181 Rev: 02**

Contractor's Proposed Resolution:

Reference Resolution: ZPMC has performed the Hardness, MT and UT of the weld build-up areas as directed by CT and has attached data as objective evidence of tests performed. ZPMC requests closure of this NCR.

ZPMC has performed the Hardness, MT and UT of the weld build-up areas as directed by CT and has attached data as objective evidence of tests performed. ZPMC requests closure of this NCR.

Submitted by:

Attachment(s): ABF-NPR-000181R02;

Caltrans' comments:

Status: REJ

Date: 16-Sep-2009

The UT report (T787-UT-2138) was generated using wrong acceptance criteria. This report should be regenerated using AWS D1.5-2002 (Table 6.3) rather than AWS D1.52002 (Table 6.4).

In addition, the Department inadvertently did not complete its QA testings. The Department requests access to both lifts 1 of East and South shafts so that all necessary QA testings can be complete.

Submitted by: Lee, Ken

Date: 16-Sep-2009

Attachment(s):

No. T-050

LETTER OF RESPONSE

TO: American Bridge/Flour JV

DATE: 2009-9-3
REGARDING: NCR-000214 (ZPMC-0190)

ZPMC received **NCR-000214 (ZPMC-0190)**, it mentioned that ZPMC has built up the base metal at the ends of the stiffeners and the skin plates on both East and South shafts in excess of 20mm.

ZPMC acknowledged this problem and tried to push forward the progress of the closing of **NCR-000214 (ZPMC-0190)**. ZPMC already performed the UT, MT for those buttering areas, and additionally the hardness test was performed under AB/F's instruction. Here ZPMC attached the relative UT, MT and hardness test reports as Caltrans' comment on ABF-NPR-000181 Rev.0.

So ZPMC hope CT could take a review and close this NCR.

ATTACHMENT:
NCR-000214 (ZPMC-0190)
ABF-NPR-000181 Rev.0
T787-UT-2138
T787-MT-5586
T787-MT-5587
T787-MT-5588
T787-MT-5589
T787-MT-5590
T787-UT-2170
T787-UT-2169
T787-UT-2167
T787-UT-2168
T787-UT-2166
T787-MT-5646
T787-MT-5645
T787-MT-5644
T787-MT-5643
T787-MT-5542
Hardness Survey Report

2009.9.3

DEPARTMENT OF TRANSPORTATION - District 4 Toll Bridge
333 Burma Road
Oakland CA 94607
Tel: Fax:

NON-CONFORMANCE REPORT TRANSMITTAL

To:	AMERICAN BRIDGE/FLUOR, A JV 375 BURMA ROAD OAKLAND CA 95607	**Date:**	19-Nov-2008
		Contract No:	04-0120F4 04-SF-80-13.2 / 13.9
Dear:	Mr. Charles Kanapicki	**Job Name:**	SAS Superstructure
Attention:	Mr. Dave Williams Consultant	**Document No:**	05.03.06-000184
Subject:	NCR No. ZPMC-0190		

Reference Description: Weld Build Up / East and South Tower Shaft Lift 1

The attached Non-Conformance Report describes an occurrence where the contractor did not comply with a requirement of the contract document as indicated below:

- ☑ Material or Workmanship not in conformance with contract documents.
- ☑ Quality Control (QC) not performed in conformance with contract documents.
- ☐ Recurring QC issue that constitutes a systematic problem in quality control.
- ☐ Non-Conformance Resolved.

Material Location: Tower **Lift:** 01

Remarks:

ZPMC has built up the base metal at the ends of the stiffeners and the skin plates on both East and South shafts in excess of 20mm. Weld build up "greater than twice the thickness of the thinner part or 20 mm [3/4 in.], whichever is less" must be approved by the Engineer. This condition exists on all the stiffeners of all skin plates and the ends of the skin plates of the East and South shafts of Lift 1.

Action Required and/or Action Taken:

Propose a resolution for the identified non-conformance including documentation of the procedures and steps taken to bring the weldment placed into compliance with the contract requirements. In addition to the material/workmanship non-conformance, propose a resolution that addresses the apparent failure of Quality Control to identify the non-conformance with AWS D1.5. Provide documentation of the steps taken by the Quality Control Manager to prevent future occurrences.

Transmitted by: Scott Kennedy Sr. Bridge Engineer

Attachments: ZPMC-0190

cc: Rick Morrow, Gary Pursell, Mark Woods, Doug Coe

File: 05.03.06

STATE OF CALIFORNIA--BUSINESS,TRANSPORTACTION AND HOUSING AGENCY

Arnold Schwarzenegger, Governor

DEPARTMENT OF TRANSPORTATION
DIVISION OF ENGINEERING SERVICES
Office of Structural Materials
Quality Assurance and Source Inspection

Bay Area Branch
690 Walnut Ave.St. 150
Vallejo, CA 94592-1133
(707) 649-5453
(707) 649-5493

Contract #: 04-0120F4
Cty: SF/ALA Rte: 80 PM: 13.2/13.9
File #: 69.25B

QUALITY ASSURANCE -- NON-CONFORMANCE REPORT

Location: Changxing Island, Shanghai, PRC
Report No: NCR-000214
Prime Contractor: American Bridge/Fluor Enterprises, a JV
Date: 18-Nov-2008
Submitting Contractor: Zhenhua Port Machinery Company, Ltd (ZPMC), Changxing Island
NCR #: ZPMC-0190

Type of problem:

Welding	☑	**Concrete**	☐	**Other**	☐	
Welding	☑	**Curing**	☐	**Procedural**	☐	**Bridge No:** 34-0006
Joint fit-up	☐	**Coating**	☐	**Other**	☐	**Component:** Stiffeners and Skin Plates
Procedural	☐	**Procedural**	☐	**Description:** East Shaft, Lift 1 and South Shaft, Lift 1		

Reference Description: AWS D1.5 2002

Description of Non-Conformance:

ZPMC has built up the base metal at the ends of the stiffeners and the skin plates on both East and South shafts in excess of 20mm. Weld build up "greater than twice the thickness of the thinner part or 20 mm [3/4 in.], whichever is less" must be approved by the Engineer. This condition exists on all the stiffeners of all skin plates and the ends of the skin plates of the East and South shafts of Lift 1.

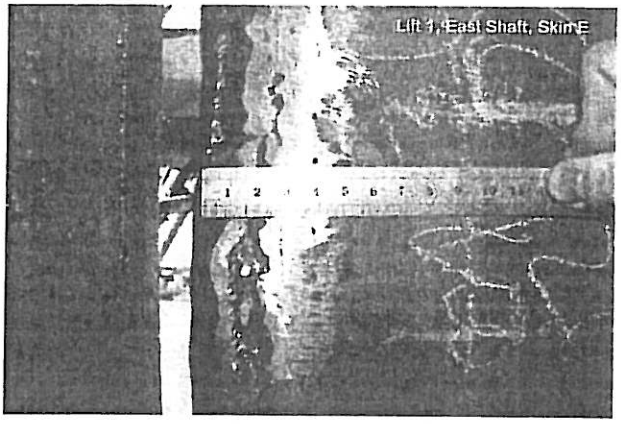

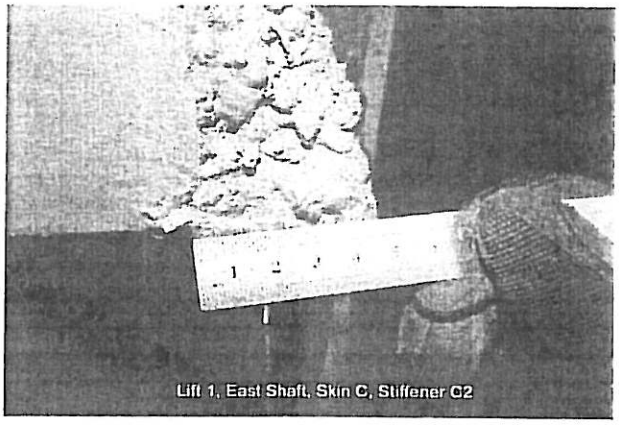

Applicable reference:
Section 3.3.4.1 and 3.3.4.2, AWS D1.5 2002.

3.3.4.1 Root openings wider than those allowed in 3.3.4, but not greater than twice the thickness of the thinner part or 20 mm [3/4 in.], whichever is less, may be corrected by welding to acceptable dimensions prior to joining the parts by welding.

3.3.4.2 Root openings larger than those allowed in 3.3.4.1 may be corrected by welding only with the approval of the Engineer.

Who discovered the problem: William Clifford, Quality Assurance Inspector
Name of individual from Contractor notified: Dan Raynor
Time and method of notification: 11/18/08; 1245; Verbal
Name of Caltrans Engineer notified: Doug Coe
Time and method of notification: None
QC Inspector's Name: 11/18/08;1230;Verbal
Was QC Inspector aware of the problem: ☐ **Yes** ☑ **No**
Contractor's proposal to correct the problem:
ZPMC will mill the built up areas to less 20mm.
Comments:
This report is for the purpose of determining conformance with the contract documents and is not for the purpose of making repair or fit for purpose recommendations. Should you require recommendations concerning repairs or remedial efforts please contact Ryan Smith, who represents the Office of Structural Materials for your project.

Inspected By:	Ishibashi,Josh	SMR
Reviewed By:	Smith,Ryan	SMR

AMERICAN BRIDGE/FLUOR ENTERPRISES, a JV
P.O. BOX 23223 Oakland, CA 94623
Phone (510) 419-0120 / Fax (510) 839-0666

NCR PROPOSED RESOLUTION

To: CALTRANS - SAS Superstructure
333 Burma Road
Oakland CA 94607

Attention: Pursell, Gary
Resident Engineer

Ref: 05.03.06-000184

Subject: NCR No. ZPMC-0190

Dated: 24-Nov-2008

Contract No.: 04-0120F4
04-SF-80-13.2 / 13.9

Job Name: SAS Superstructure

Document No.: ABF-NPR-000181 **Rev:** 00

Contractor's Proposed Resolution:

Reference Resolution: These edges are to be machined down to meet dimensional tolerances for length and MT inspected after machining.

ZPMC exceeded the maximum allowable weld build up without Engineers approval. These edges are to be machined down to meet dimensional tolerances for length and MT inspected after machining. ZPMC production considered this acceptable since the weld will be machined later. ZPMC did however document the weld build up on a Welding Repair Report and will subsequently document the MT inspection after machining.

Submitted by:

Attachment(s): ABF-NPR-000181R00

Caltrans' comments:

Status: REJ

Date: 14-Jan-2009

The proposed resolution is not acceptable. This Non-Conformance, along with the issue of weld parameters / excessive bead width during buttering as documented in Non-Conformance ZPMC-0184, gives the Department cause for concern about the quality of the weld build-up. The proposal to grind and MT the weld build-up area is not sufficient, and more extensive testing than MT is necessary to ensure the quality of the weld.

Example of the types of testing that the Department would consider sufficient to ensure the quality of the weld build-up includes:
- Ultrasonic Testing (UT) of the weld build-up prior to welding of the Tower shaft to the base plate.
- Hardness tests between the base metal and the welded area.
- Magnetic Particle (MT) testing of the weld build-up.

Please propose a resolution with a Request for Information that includes the types and amount of testing proposed to ensure the quality of the weld, and clear this Non-Conformance.

If you have any questions regarding this matter, please contact the Department's representatives in Shanghai.

Submitted by: Wright, Doug

Date: 14-Jan-2009

Attachment(s):

REPORT OF ULTRASONIC EXAMINATION
UT探伤报告

REPORT NO. 报告编号 T787-UT-2138	DATE 2009.08.21	PAGE 1 OF 3	Revision No: 0

PROJECT NO. :工程编号 ZP06-787		CONTRACTOR : CALTRANS
ITEMS NAME: 部件名称 FIRST LIFTING TOWER(E)	DRAWING NO.: 图号 ESD1-SA237/233	CALTRANS CONTRACT NO.: 04-0120F4 加州工程编号
REFERENCING CODE 参考规范 AWS D1.5-2002	ACCEPTANCE STANDARD接受标准 AWS D1.5-2002(Table 6.4)	PROCEDURE NO. 程序编号 ZPQC-UT-01
WELDING PROCESS 焊接方法 FCAW	JOINT TYPE 焊缝类型 NA	CALIBRATION DUE DATE 仪器校正有效期 Dec. 28ST ,2009

EQUIPMENT 设备 UT SCOPE	MANUFACTURER 制造商 PANAMETRICS	MODEL NO. 样式编号 EPOCH-4B	SERIAL NO. 序列编号 071565311, 061488510, 061495811, 070152011,
CALIBRATION BLOCK 试块 AWS IIW BLOCK TYPE II	COUPLANT 耦合剂 C.M.C	MATERIAL/THICKNESS 材料厚度 A709M-345T2-Z 70/65/45/60/80mm	

TRANSDUCER 探头

MANUFACTURER 制造商	ANGLE 角度	FREQUENCY 频率	SIZE 尺寸	MANUFACTURER 制造商	ANGLE 角度	FREQUENCY 频率	SIZE 尺寸
Changchao	70°	2.5MHz	18×18mm	Changchao	45°	2.5MHz	18×18mm
Changchao	0°	2.5MHz	20mm				

Reference Level 参考灵敏度 20dB

Base metal inspected per AWS D1.5-2002 Section 6.19.5 0° UT OK.

WELD IDENTIFICATION 焊缝部件编号	INDICATION NO. 指示号	PROBE ANGLE 探测角度	FROM FACE 检测面	LEG (次数)	DECIBELS分贝 Indication Level a	Reference Level b	Attenuation Factor c	Indication Rating d	DISCONTINUITY 不连续性 LOCATION OF DISCONTINUITY 不连续位置(mm) Length 长度	Sound Path 声程	Depth from Surface 距表面深度	From'X 距X	From'Y 距Y	Discontinuity Evaluation 缺陷估计	Remark 备注
SA237		70				20								ACC.	100%
		45				20								ACC.	100%
		0	C			20								ACC.	100%
P336,P1028,P324,P352		70				20								ACC.	100%
		45				20								ACC.	100%
		0	C			20								ACC.	100%
P326		70				20								ACC.	100%
		45				20								ACC.	100%

EXAMINED BY主探 Dai Geng sheng LEVEL - II SIGN / DATE 09.08.21	REVIEWED BY 审核 Wu Chao LEVEL - II SIGN / DATE 09.08.21
质量经理 / QCM 签字 SIGN / 日期 DATE	用户CUSTOMER 签字 SIGN / 日期 DATE

(FORM# ZPQC-UT01)

REPORT OF ULTRASONIC EXAMINATION
UT探伤报告

REPORT NO. 报告编号 T787-UT-2138 DATE 2009.08.21 PAGE 2 OF 3 Revision No: 0

WELD IDENTIFICATION 焊缝部件编号	INDICATION NO. 指示号	PROBE ANGLE 探测角度	FROM FACE 检测面	LEG（次数）	DECIBELS分贝				DISCONTINUITY 不连续性					Discontinuity Evaluation 缺陷估计	Remark 备注
					Indication Level	Reference Level	Attenuation Factor	Indication Rating	LOCATION OF DISCONTINUITY 不连续位置(mm)						
					a	b	c	d	Length 长度	Sound Path 声程	Depth from Surface 距表面深度	From'X 距X	From'Y 距Y		
		0	C			20								ACC.	100%
P540,SA279,P1280		70				20								ACC.	100%
		45				20								ACC.	100%
		0	C			20								ACC.	100%
P189,P378,P379,P388, P507		70				20								ACC.	100%
		45				20								ACC.	100%
		0	C			20								ACC.	100%
P1145		70				20								ACC.	100%
		45				20								ACC.	100%
		0	C			20								ACC.	100%
P1294,SA294,P143,P12 91		70				20								ACC.	100%
		45				20								ACC.	100%
		0	C			20								ACC.	100%
P48,P397,P394,P373,P 390,P389,P588		70				20								ACC.	100%
		45				20								ACC.	100%
		0	C			20								ACC.	100%
P179		70				20								ACC.	100%
		45				20								ACC.	100%
		0	C			20								ACC.	100%
P1287,SA295		70				20								ACC.	100%
		45				20								ACC.	100%
		0	C			20								ACC.	100%

EXAMINED BY主探 Dai Gengsheng
LEVEL - II SIGN / / DATE 09.08.21

REVIEWED BY 审核 Wu Chao
LEVEL - II SIGN / DATE 09.08.21

质量经理 / QCM
签字 SIGN / 日期 DATE

用户CUSTOMER
签字 SIGN / 日期 DATE

(FORM# ZPQC-UT01)

REPORT OF ULTRASONIC EXAMINATION
UT探伤报告

REPORT NO. 报告编号 T787-UT-2138 DATE 2009.08.21 PAGE 3 OF 3 Revision No: 0

WELD IDENTIFICATION 焊缝部件编号	INDICATION NO. 指示号	PROBE ANGLE 探测角度	FROM FACE 检测面	LEG（次数）	DECIBELS分贝 Indication Level a	Reference Level b	Attenuation Factor c	Indication Rating d	DISCONTINUITY 不连续性 LOCATION OF DISCONTINUITY 不连续位置(mm) Length 长度	Sound Path 声程	Depth from Surface 距表面深度	From'X 距X	From'Y 距Y	Discontinuity Evaluation 缺陷估计	Remark 备注
P285,P20,P112,P413		70				20								ACC.	100%
		45				20								ACC.	100%
		0	C			20								ACC.	100%
P181		70				20								ACC.	100%
		45				20								ACC.	100%
		0	C			20								ACC.	100%
P837,SA225,P1302		70				20								ACC.	100%
		45				20								ACC.	100%
		0	C			20								ACC.	100%
P155,P589,P503,P190		70				20								ACC.	100%
		45				20								ACC.	100%
		0	C			20								ACC.	100%
P1145		70				20								ACC.	100%
		45				20								ACC.	100%
		0	C			20								ACC.	100%
BASE METAL PER T-WR336, 389, 390, 391, 346															
BLANK															

EXAMINED BY主探 Dai Cheng sheng
LEVEL - II SIGN / DATE 09.08.21

REVIEWED BY 审核 Wu Chao
LEVEL - II SIGN / DATE 09.08.21

质量经理 / QCM
签字 SIGN / 日期 DATE

用户CUSTOMER
签字 SIGN / 日期 DATE

(FORM# ZPQC-UT01)

REPORT OF MAGNETIC PARTICLE EXAMINATION

磁粉检测报告

REPORT NO. 报告编号 T787-MT-5586	DATE日期 2009.08.21	PAGE OF页码 1/1	Revision No: 0

PROJECT NO. 工程编号:	ZP06-787	CONTRACTOR: 用 户:	CALTRANS
DRAWING NO. 图号:	ESD1-SA237 FIRST LIFTING TOWER(E)	CALTRANS CONTRACT NO.: 加州工程编号	04-0120F4
REFERENCING CODE 参考规范编码 AWS D1.5-2002	ACCEPTANCE STANDARD 接受标准 AWS D1.5-2002	PROCEDURE NO. 程序编号 ZPQC-MT-01	CALIBRATION DUE DATE 仪器校正有效期 Dec. 28ST ,2009
EQUIPMENT 设备 MT YOKE	MANUFACTURER 制造商 PARKER	MODEL NO. 样式编号 B310S	SERIAL NO. 连续编号 5620 5395 5617
MAGNETIZING METHOD 磁化方法	Continuous magnetic yoke 磁轭式连续法	CURRENT 电流	AC
PARTICLE TYPE 磁粉类型	Dry magnet powder 干磁粉	YOKE SPACING 磁轭间距	70～150mm
MATERIAL TO BE EXAMINED 检测材料	√ WELDING 焊接件 ☐ CASTING 铸件 ☐ FORGING 锻造	Material & thickness 母材,厚度	A709M-345T2-Z 70/10/65mm
WELDING PROCESS 焊接方法	FCAW	TYPE OF JOINT 焊缝类型	NA

WELD I.D. 焊缝编号	DISCONTINUITY不连续性			ACCEPT 接受	REJECT 拒收	REMARKS 备注
	INDICATION 指示	TYPE 类型	LENGTH IN mm 长度			
SA237				ACC.		100%MT
P336,P1028,P324,P352				ACC.		100%MT
P326				ACC.		100%MT
BASE METAL PER T-WR336						
BLANK						

EXAMINED BY主探 Cai Xinxin 09. 8. 21 LEVEL - II SIGN 签名 / DATE日期	REVIEWED BY 审核 Nang Wei 09. 8. 21 LEVEL-II SIGN / DATE日期
质量经理 / QCM 签字 SIGN / 日期 DATE	用户CUSTOMER 签字 SIGN / 日期 DATE

(FORM# ZPQC-MT01)

REPORT OF MAGNETIC PARTICLE EXAMINATION

磁粉检测报告

REPORT NO. 报告编号 T787-MT-5587	DATE日期 2009.08.21	PAGE OF页码 1/1	Revision No: 0

PROJECT NO. 工程编号:	ZP06-787	CONTRACTOR: 用 户:	CALTRANS
DRAWING NO. 图号:	ESD1-SA237 FIRST LIFTING TOWER(E)	CALTRANS CONTRACT NO.: 加州工程编号	04-0120F4
REFERENCING CODE 参考规范编码 AWS D1.5-2002	ACCEPTANCE STANDARD 接受标准 AWS D1.5-2002	PROCEDURE NO. 程序编号 ZPQC-MT-01	CALIBRATION DUE DATE 仪器校正有效期 Dec. 28ST ,2009
EQUIPMENT 设备 MT YOKE	MANUFACTURER 制造商 PARKER	MODEL NO. 样式编号 B310S	SERIAL NO. 连续编号 5620 5395 5617
MAGNETIZING METHOD 磁化方法	Continuous magnetic yoke 磁轭式连续法	CURRENT 电流	AC
PARTICLE TYPE 磁粉类型	Dry magnet powder 干磁粉	YOKE SPACING 磁轭间距	70～150mm
MATERIAL TO BE EXAMINED 检测材料	√ WELDING 焊接件 ☐ CASTING 铸件 ☐ FORGING 锻造	Material & thickness 母材,厚度	A709M-345T2-Z 65/45/10/60mm
WELDING PROCESS 焊接方法	FCAW	TYPE OF JOINT 焊缝类型	NA

WELD I.D. 焊缝编号	DISCONTINUITY不连续性 INDICATION 指示	TYPE 类型	LENGTH IN mm 长度	ACCEPT 接受	REJECT 拒收	REMARKS 备注
P540,SA279,P1280				ACC.		100%MT
P189,P378,P379,P388,P507				ACC.		100%MT
P1145				ACC.		100%MT
BASE METAL PER T-WR389						
BLANK						

EXAMINED BY主探 Cai Xinxin 09.8.21 LEVEL - II SIGN 签名 / DATE日期	REVIEWED BY 审核 Wang Wei 09.8.21 LEVEL-II SIGN / DATE日期
质量经理 / QCM 签字 SIGN / 日期 DATE	用户CUSTOMER 签字 SIGN / 日期 DATE

(FORM# ZPQC-MT01)

REPORT OF MAGNETIC PARTICLE EXAMINATION

磁粉检测报告

REPORT NO. 报告编号 T787-MT-5588	DATE日期 2009.08.21	PAGE OF页码 1/1	Revision No: 0

PROJECT NO. 工程编号:	ZP06-787	CONTRACTOR: 用 户:	CALTRANS
DRAWING NO. 图号:	ESD1-SA237 FIRST LIFTING TOWER(E)	CALTRANS CONTRACT NO.: 加州工程编号	04-0120F4
REFERENCING CODE 参考规范编码 AWS D1.5-2002	ACCEPTANCE STANDARD 接受标准 AWS D1.5-2002	PROCEDURE NO. 程序编号 ZPQC-MT-01	CALIBRATION DUE DATE 仪器校正有效期 Dec. 28ST ,2009
EQUIPMENT 设备 MT YOKE	MANUFACTURER 制造商 PARKER	MODEL NO. 样式编号 B310S	SERIAL NO. 连续编号 5620 5395 5617
MAGNETIZING METHOD 磁化方法	Continuous magnetic yoke 磁轭式连续法	CURRENT 电流	AC
PARTICLE TYPE 磁粉类型	Dry magnet powder 干磁粉	YOKE SPACING 磁轭间距	70～150mm
MATERIAL TO BE EXAMINED 检测材料	√ WELDING 焊接件 ☐ CASTING 铸件 ☐ FORGING 锻造	Material & thickness 母材,厚度	A709M-345T2-Z 65/45/10/60mm
WELDING PROCESS 焊接方法	FCAW	TYPE OF JOINT 焊缝类型	NA

WELD I.D. 焊缝编号	DISCONTINUITY不连续性 INDICATION 指示	TYPE 类型	LENGTH IN mm 长度	ACCEPT 接受	REJECT 拒收	REMARKS 备注
P1294,SA294,P143,P1291				ACC.		100%MT
P48,P397,P394,P393,P390,P389,P588				ACC.		100%MT
P179				ACC.		100%MT
BASE METAL PER T-WR390						
BLANK						

EXAMINED BY主探 Cai Xinxin LEVEL - II SIGN 签名 / DATE日期 09.8.21	REVIEWED BY 审核 Wang Wei 09.8.21 LEVEL-II SIGN / DATE日期
质量经理 / QCM 签字 SIGN / 日期 DATE	用户CUSTOMER 签字 SIGN / 日期 DATE

(FORM# ZPQC-MT01)

REPORT OF MAGNETIC PARTICLE EXAMINATION

磁粉检测报告

REPORT NO. 报告编号 T787-MT-5589	DATE日期 2009.08.21	PAGE OF页码 1/1	Revision No: 0

PROJECT NO. 工程编号:	ZP06-787	CONTRACTOR: 用 户:	CALTRANS
DRAWING NO. 图号:	ESD1-SA237 FIRST LIFTING TOWER(E)	CALTRANS CONTRACT NO.: 加州工程编号	04-0120F4
REFERENCING CODE 参考规范编码 AWS D1.5-2002	ACCEPTANCE STANDARD 接受标准 AWS D1.5-2002	PROCEDURE NO. 程序编号 ZPQC-MT-01	CALIBRATION DUE DATE 仪器校正有效期 Dec. 28ST ,2009
EQUIPMENT 设备 MT YOKE	MANUFACTURER 制造商 PARKER	MODEL NO. 样式编号 B310S	SERIAL NO. 连续编号 5620 5395 5617
MAGNETIZING METHOD 磁化方法	Continuous magnetic yoke 磁轭式连续法	CURRENT 电流	AC
PARTICLE TYPE 磁粉类型	Dry magnet powder 干磁粉	YOKE SPACING 磁轭间距	70～150mm
MATERIAL TO BE EXAMINED 检测材料	√ WELDING 焊接件 ☐ CASTING 铸件 ☐ FORGING 锻造	Material & thickness 母材,厚度	A709M-345T2-Z 65/45/10/60mm
WELDING PROCESS 焊接方法	FCAW	TYPE OF JOINT 焊缝类型	NA

WELD I.D. 焊缝编号	DISCONTINUITY不连续性 INDICATION 指示	TYPE 类型	LENGTH IN mm 长度	ACCEPT 接受	REJECT 拒收	REMARKS 备注
P1287,SA295				ACC.		100%MT
P285,P20,P112, P413				ACC.		100%MT
P181				ACC.		100%MT
BASE METAL PER T-WR391						
BLANK						

EXAMINED BY主探 Cai Xinxin (Cai Xin Xin) LEVEL - II SIGN 签名 / DATE日期 09. 8. 21	REVIEWED BY 审核 Wang wei 09. 8. 21 LEVEL-II SIGN / DATE日期
质量经理 / QCM 签字 SIGN / 日期 DATE	用户CUSTOMER 签字 SIGN / 日期 DATE

(FORM# ZPQC-MT01)

REPORT OF MAGNETIC PARTICLE EXAMINATION

磁粉检测报告

REPORT NO. 报告编号 T787-MT-5590	DATE日期 2009.08.21	PAGE OF页码 1/1	Revision No: 0

PROJECT NO. 工程编号:	ZP06-787	CONTRACTOR: 用 户:	CALTRANS
DRAWING NO. 图号:	ESD1-SA237 FIRST LIFTING TOWER(E)	CALTRANS CONTRACT NO.: 加州工程编号	04-0120F4
REFERENCING CODE 参考规范编码 AWS D1.5-2002	ACCEPTANCE STANDARD 接受标准 AWS D1.5-2002	PROCEDURE NO. 程序编号 ZPQC-MT-01	CALIBRATION DUE DATE 仪器校正有效期 Dec. 28ST ,2009
EQUIPMENT 设备 MT YOKE	MANUFACTURER 制造商 PARKER	MODEL NO. 样式编号 B310S	SERIAL NO. 连续编号 5620 5395 5617
MAGNETIZING METHOD 磁化方法	Continuous magnetic yoke 磁轭式连续法	CURRENT 电流	AC
PARTICLE TYPE 磁粉类型	Dry magnet powder 干磁粉	YOKE SPACING 磁轭间距	70～150mm
MATERIAL TO BE EXAMINED 检测材料	√ WELDING 焊接件 ☐ CASTING 铸件 ☐ FORGING 锻造	Material & thickness 母材,厚度	A709M-345T2-Z 80/60/10/60mm
WELDING PROCESS 焊接方法	FCAW	TYPE OF JOINT 焊缝类型	NA

WELD I.D. 焊缝编号	DISCONTINUITY不连续性			ACCEPT 接受	REJECT 拒收	REMARKS 备注
	INDICATION 指示	TYPE 类型	LENGTH IN mm 长度			
P837,SA225,P1302				ACC.		100%MT
P155,P589,P503,P190				ACC.		100%MT
P1145				ACC.		100%MT
BASE METAL PER T-WR346						
BLANK						

EXAMINED BY主探 Cai Xinxin 09.8.21 LEVEL - II SIGN 签名 / DATE日期	REVIEWED BY 审核 Wang Wei 09.8.21 LEVEL-II SIGN / DATE日期
质量经理 / QCM 签字 SIGN / 日期 DATE	用户CUSTOMER 签字 SIGN / 日期 DATE

(FORM# ZPQC-MT01)

REPORT OF ULTRASONIC EXAMINATION
UT探伤报告

REPORT NO. 报告编号 T787-UT-2170	DATE 2009.08.25	PAGE 1 OF 2		Revision No: 0

PROJECT NO. :工程编号 ZP06-787		CONTRACTOR : CALTRANS
ITEMS NAME: 部件名称 FIRST LIFTING TOWER(S)	DRAWING NO.: 图号 SA173,P401,P527, P185,P400,P1145	CALTRANS CONTRACT NO.: 04-0120F4 加州工程编号
REFERENCING CODE 参考规范 AWS D1.5-2002	ACCEPTANCE STANDARD接受标准 AWS D1.5-2002(Table 6.3)	PROCEDURE NO. 程序编号 ZPQC-UT-01
WELDING PROCESS 焊接方法 NA	JOINT TYPE 焊缝类型 NA	CALIBRATION DUE DATE 仪器校正有效期 Dec. 28ST ,2009

EQUIPMENT 设备	MANUFACTURER 制造商	MODEL NO. 样式编号	SERIAL NO. 序列编号
UT SCOPE	PANAMETRICS	EPOCH-4B	071565311, 061488510, 061495811, 070152011,
CALIBRATION BLOCK 试块 AWS IIW BLOCK TYPE II	COUPLANT 耦合剂 C.M.C	MATERIAL/THICKNESS 材料厚度 A709M-345T2-Z	10/60mm

TRANSDUCER 探头

MANUFACTURER 制造商	ANGLE 角度	FREQUENCY 频率	SIZE 尺寸	MANUFACTURER 制造商	ANGLE 角度	FREQUENCY 频率	SIZE 尺寸
Changchao	70°	2.5MHz	18×18mm	Changchao	60°	2.5MHz	18×18mm
Changchao	0°	2.5MHz	20mm				

Reference Level 参考灵敏度 20dB

Base metal inspected per AWS D1.5-2002 Section 6.19.5 0° UT OK.

WELD IDENTIFICATION 焊缝部件编号	INDICATION NO. 指示号	PROBE ANGLE 探测角度	FROM FACE 检测面	LEG (次数)	DECIBELS分贝 Indication Level a	Reference Level b	Attenuation Factor c	Indication Rating d	DISCONTINUITY 不连续性 LOCATION OF DISCONTINUITY 不连续位置(mm) Length 长度	Sound Path 声程	Depth from Surface 距表面深度	From'X 距X	From'Y 距Y	Discontinuity Evaluation 缺陷估计	Remark 备注
SA173		70				34								ACC.	100%
		60				34								ACC.	100%
		0	C			34								ACC.	100%
P401,P527,P185,P400		70				34								ACC.	100%
		60				34								ACC.	100%
		0	C			34								ACC.	100%
P1145		70				34								ACC.	100%
		60				34								ACC.	100%

EXAMINED BY主探 Xu Qingqang LEVEL - II SIGN / DATE 09.08.25	REVIEWED BY 审核 LEVEL - II SIGN / DATE 2009.08.25
质量经理 / QCM 签字 SIGN / 日期 DATE	用户CUSTOMER 签字 SIGN / 日期 DATE

(FORM# ZPQC-UT01)

REPORT OF ULTRASONIC EXAMINATION
UT探伤报告

REPORT NO. 报告编号 T787-UT-2170 DATE 2009.08.25 PAGE 2 OF 2 Revision No: 0

WELD IDENTIFICATION 焊缝部件编号	INDICATION NO. 指示号	PROBE ANGLE 探测角度	FROM FACE 检测面	LEG（次数）	DECIBELS分贝				DISCONTINUITY 不连续性					Discontinuity Evaluation 缺陷估计	Remark 备注
					Indication Level	Reference Level	Attenuation Factor	Indication Rating	LOCATION OF DISCONTINUITY 不连续位置(mm)						
					a	b	c	d	Length 长度	Sound Path 声程	Depth from Surface 距表面深度	From'X 距X	From'Y 距Y		
		0	C			34				-				ACC.	100%
AFTER T-WR336, 389, 390, 391, 346															
BLANK															

EXAMINED BY主探 Xu Rongqang

LEVEL - II SIGN / DATE 09.08.25

REVIEWED BY 审核 [illegible]

LEVEL - II SIGN / DATE 2009.8.25

质量经理 / QCM

签字 SIGN / 日期 DATE

用户CUSTOMER

签字 SIGN / 日期 DATE

(FORM# ZPQC-UT01)

REPORT OF ULTRASONIC EXAMINATION
UT探伤报告

REPORT NO. 报告编号 T787-UT-2169	DATE 2009.08.25	PAGE 1 OF 2		Revision No: 0

PROJECT NO. :工程编号 ZP06-787		CONTRACTOR : CALTRANS
ITEMS NAME: 部件名称 FIRST LIFTING TOWER(S)	DRAWING NO.: 图号 SA180,P232,P376, P24,P181	CALTRANS CONTRACT NO.: 04-0120F4 加州工程编号
REFERENCING CODE 参考规范 AWS D1.5-2002	ACCEPTANCE STANDARD接受标准 AWS D1.5-2002(Table 6.3)	PROCEDURE NO. 程序编号 ZPQC-UT-01
WELDING PROCESS 焊接方法 NA	JOINT TYPE 焊缝类型 NA	CALIBRATION DUE DATE 仪器校正有效期 Dec. 28ST ,2009

EQUIPMENT 设备	MANUFACTURER 制造商	MODEL NO. 样式编号	SERIAL NO. 序列编号
UT SCOPE	PANAMETRICS	EPOCH-4B	071565311, 061488510, 061495811, 070152011,
CALIBRATION BLOCK 试块	COUPLANT 耦合剂	MATERIAL/THICKNESS 材料厚度	
AWS IIW BLOCK TYPE II	C.M.C	A709M-345T2-Z	45/60mm

TRANSDUCER 探头

MANUFACTURER 制造商	ANGLE 角度	FREQUENCY 频率	SIZE 尺寸	MANUFACTURER 制造商	ANGLE 角度	FREQUENCY 频率	SIZE 尺寸
Changchao	70°	2.5MHz	18×18mm	Changchao	60°	2.5MHz	18×18mm
Changchao	0°	2.5MHz	20mm				

Reference Level 参考灵敏度 20dB

Base metal inspected per AWS D1.5-2002 Section 6.19.5 0° UT OK.

WELD IDENTIFICATION 焊缝部件编号	INDICATION NO. 指示号	PROBE ANGLE 探测角度	FROM FACE 检测面	LEG（次数）	DECIBELS分贝				DISCONTINUITY 不连续性					Discontinuity Evaluation 缺陷估计	Remark 备注
					Indication Level	Reference Level	Attenuation Factor	Indication Rating	LOCATION OF DISCONTINUITY 不连续位置(mm)						
					a	b	c	d	Length 长度	Sound Path 声程	Depth from Surface 距表面深度	From'X 距X	From'Y 距Y		
SA180		70				34								ACC.	100%
		60				34								ACC.	100%
		0	C			34								ACC.	100%
P232,P376,P24		70				34								ACC.	100%
		60				34								ACC.	100%
		0	C			34								ACC.	100%
P181		70				34								ACC.	100%
		60				34								ACC.	100%

EXAMINED BY主探 Xu Rong Gang	REVIEWED BY 审核
LEVEL - II SIGN / DATE 09.08.25	LEVEL - II SIGN / DATE 09.08.25
质量经理 / QCM	用户CUSTOMER
签字 SIGN / 日期 DATE	签字 SIGN / 日期 DATE

(FORM# ZPQC-UT01)

REPORT OF ULTRASONIC EXAMINATION
UT探伤报告

REPORT NO. 报告编号 T787-UT-2169 DATE 2009.08.25 PAGE 2 OF 2 Revision No: 0

WELD IDENTIFICATION 焊缝部件编号	INDICATION NO. 指示号	PROBE ANGLE 探测角度	FROM FACE 检测面	LEG（次数）	DECIBELS分贝				DISCONTINUITY 不连续性					Discontinuity Evaluation 缺陷估计	Remark 备注
					Indication Level	Reference Level	Attenuation Factor	Indication Rating	LOCATION OF DISCONTINUITY 不连续位置(mm)						
					a	b	c	d	Length 长度	Sound Path 声程	Depth from Surface 距表面深度	From'X 距X	From'Y 距Y		
		0	C			34								ACC.	100%
AFTER T-WR336, 389, 390, 391, 346															
BLANK															

EXAMINED BY主探 Xupong gang

LEVEL - II SIGN / DATE 09.08.25

REVIEWED BY 审核 Li Ming

LEVEL - II SIGN / DATE 2009.08.25

质量经理 / QCM

签字 SIGN / 日期 DATE

用户CUSTOMER

签字 SIGN / 日期 DATE

(FORM# ZPQC-UT01)

REPORT OF ULTRASONIC EXAMINATION
UT探伤报告

REPORT NO. 报告编号 T787-UT-2167	DATE 2009.08.25	PAGE 1 OF 2		Revision No: 0

PROJECT NO. :工程编号 ZP06-787		CONTRACTOR : CALTRANS
ITEMS NAME: 部件名称 FIRST LIFTING TOWER(S)	DRAWING NO.: 图号 SA179,P226,P229, P122,P110,P179	CALTRANS CONTRACT NO.: 04-0120F4 加州工程编号
REFERENCING CODE 参考规范 AWS D1.5-2002	ACCEPTANCE STANDARD接受标准 AWS D1.5-2002(Table 6.3)	PROCEDURE NO. 程序编号 ZPQC-UT-01
WELDING PROCESS 焊接方法 NA	JOINT TYPE 焊缝类型 NA	CALIBRATION DUE DATE 仪器校正有效期 Dec. 28ST ,2009

EQUIPMENT 设备	MANUFACTURER 制造商	MODEL NO. 样式编号	SERIAL NO. 序列编号
UT SCOPE	PANAMETRICS	EPOCH-4B	071565311, 061488510, 061495811, 070152011,

CALIBRATION BLOCK 试块	COUPLANT 耦合剂	MATERIAL/THICKNESS 材料厚度	
AWS IIW BLOCK TYPE II	C.M.C	A709M-345T2-Z	45/60mm

TRANSDUCER 探头

MANUFACTURER 制造商	ANGLE 角度	FREQUENCY 频率	SIZE 尺寸	MANUFACTURER 制造商	ANGLE 角度	FREQUENCY 频率	SIZE 尺寸
Changchao	70°	2.5MHz	18×18mm	Changchao	60°	2.5MHz	18×18mm
Changchao	0°	2.5MHz	20mm				

Reference Level 参考灵敏度 20dB

Base metal inspected per AWS D1.5-2002 Section 6.19.5 0° UT OK.

WELD IDENTIFICATION 焊缝部件编号	INDICATION NO. 指示号	PROBE ANGLE 探测角度	FROM FACE 检测面	LEG (次数)	DECIBELS分贝				DISCONTINUITY 不连续性					Discontinuity Evaluation 缺陷估计	Remark 备注
					Indication Level a	Reference Level b	Attenuation Factor c	Indication Rating d	LOCATION OF DISCONTINUITY 不连续位置(mm) Length 长度	Sound Path 声程	Depth from Surface 距表面深度	From'X 距X	From'Y 距Y		
SA179		70				34								ACC.	100%
		60				34								ACC.	100%
		0	C			34								ACC.	100%
P226,P229,P122,P110		70				34								ACC.	100%
		60				34								ACC.	100%
		0	C			34								ACC.	100%
P179		70				34								ACC.	100%
		60				34								ACC.	100%

EXAMINED BY主探 Xu Bing gang LEVEL - II SIGN / DATE 09. 08. 25	REVIEWED BY 审核 LEVEL - II SIGN / DATE 2009. 08. 25
质量经理 / QCM 签字 SIGN / 日期 DATE	用户CUSTOMER 签字 SIGN / 日期 DATE

(FORM# ZPQC-UT01)

REPORT OF ULTRASONIC EXAMINATION
UT探伤报告

REPORT NO. 报告编号 T787-UT-2167 DATE 2009.08.25 PAGE 2 OF 2 Revision No: 0

WELD IDENTIFICATION 焊缝部件编号	INDICATION NO. 指示号	PROBE ANGLE 探测角度	FROM FACE 检测面	LEG（次数）	DECIBELS分贝				DISCONTINUITY 不连续性					Discontinuity Evaluation 缺陷估计	Remark 备注
					Indication Level	Reference Level	Attenuation Factor	Indication Rating	LOCATION OF DISCONTINUITY 不连续位置(mm)						
					a	b	c	d	Length 长度	Sound Path 声程	Depth from Surface 距表面深度	From'X 距X	From'Y 距Y		
		0	C			34								ACC.	100%
AFTER T-WR336, 389, 390, 391, 346															
BLANK															

EXAMINED BY主探

Xu Rongqang

LEVEL - II SIGN / DATE 09.08.25

REVIEWED BY 审核

Li Ming

LEVEL - II SIGN / DATE 2009.08.25

质量经理 / QCM

签字 SIGN / 日期 DATE

用户CUSTOMER

签字 SIGN / 日期 DATE

(FORM# ZPQC-UT01)

REPORT OF ULTRASONIC EXAMINATION
UT探伤报告

REPORT NO. 报告编号 T787-UT-2168	DATE 2009.08.25	PAGE 1 OF 2		Revision No: 0

PROJECT NO. :工程编号 ZP06-787		CONTRACTOR : CALTRANS
ITEMS NAME: 部件名称 FIRST LIFTING TOWER(S)	DRAWING NO.: 图号 SA178,P163,P401, P110,P1145	CALTRANS CONTRACT NO.: 04-0120F4 加州工程编号
REFERENCING CODE 参考规范 AWS D1.5-2002	ACCEPTANCE STANDARD接受标准 AWS D1.5-2002(Table 6.3)	PROCEDURE NO. 程序编号 ZPQC-UT-01
WELDING PROCESS 焊接方法 NA	JOINT TYPE 焊缝类型 NA	CALIBRATION DUE DATE仪器校正有效期 Dec. 28ST ,2009

EQUIPMENT 设备	MANUFACTURER 制造商	MODEL NO. 样式编号	SERIAL NO. 序列编号
UT SCOPE	PANAMETRICS	EPOCH-4B	071565311, 061488510, 061495811, 070152011,

CALIBRATION BLOCK 试块	COUPLANT 耦合剂	MATERIAL/THICKNESS 材料厚度	
AWS IIW BLOCK TYPE II	C.M.C	A709M-345T2-Z	45/60mm

TRANSDUCER 探头

MANUFACTURER 制造商	ANGLE 角度	FREQUENCY 频率	SIZE 尺寸	MANUFACTURER 制造商	ANGLE 角度	FREQUENCY 频率	SIZE 尺寸
Changchao	70°	2.5MHz	18×18mm	Changchao	60°	2.5MHz	18×18mm
Changchao	0°	2.5MHz	20mm				

Reference Level 参考灵敏度 20dB

Base metal inspected per AWS D1.5-2002 Section 6.19.5 0° UT OK.

WELD IDENTIFICATION 焊缝部件编号	INDICATION NO. 指示号	PROBE ANGLE 探测角度	FROM FACE 检测面	LEG（次数）	DECIBELS分贝				DISCONTINUITY 不连续性					Discontinuity Evaluation 缺陷估计	Remark 备注
					Indication Level a	Reference Level b	Attenuation Factor c	Indication Rating d	LOCATION OF DISCONTINUITY 不连续位置(mm) Length 长度	Sound Path 声程	Depth from Surface 距表面深度	From'X 距X	From'Y 距Y		
SA178		70				34								ACC.	100%
		60				34								ACC.	100%
		0	C			34								ACC.	100%
P163,P401,P110		70				34								ACC.	100%
		60				34								ACC.	100%
		0	C			34								ACC.	100%
P1145		70				34								ACC.	100%
		60				34								ACC.	100%

EXAMINED BY主探 Xu Rong Qiang	REVIEWED BY 审核
LEVEL - II SIGN / DATE 09.08.25	LEVEL - II SIGN / DATE 2009.08.25
质量经理 / QCM	用户CUSTOMER
签字 SIGN / 日期 DATE	签字 SIGN / 日期 DATE

(FORM# ZPQC-UT01)

REPORT OF ULTRASONIC EXAMINATION
UT探伤报告

REPORT NO. 报告编号 T787-UT-2168 | DATE 2009.08.25 | PAGE 2 OF 2 | Revision No: 0

WELD IDENTIFICATION 焊缝部件编号	INDICATION NO. 指示号	PROBE ANGLE 探测角度	FROM FACE 检测面	LEG（次数）	DECIBELS分贝 Indication Level a	Reference Level b	Attenuation Factor c	Indication Rating d	DISCONTINUITY 不连续性 LOCATION OF DISCONTINUITY 不连续位置(mm) Length 长度	Sound Path 声程	Depth from Surface 距表面深度	From'X 距X	From'Y 距Y	Discontinuity Evaluation 缺陷估计	Remark 备注
		0	C			34				-				ACC.	100%
AFTER T-WR336, 389, 390, 391, 346															
BLANK															

EXAMINED BY主探: Xu Rong gang
LEVEL - II SIGN / DATE 09.08.25

REVIEWED BY 审核: Li Guang
LEVEL - II SIGN / DATE 2009.08.25

质量经理 / QCM
签字 SIGN / 日期 DATE

用户CUSTOMER
签字 SIGN / 日期 DATE

(FORM# ZPQC-UT01)

REPORT OF ULTRASONIC EXAMINATION
UT探伤报告

REPORT NO. 报告编号 T787-UT-2166	DATE 2009.08.25	PAGE 1 OF 2		Revision No: 0

PROJECT NO. :工程编号 ZP06-787		CONTRACTOR : CALTRANS
ITEMS NAME: 部件名称 FIRST LIFTING TOWER(S)	DRAWING NO.: 图号 SA159,P326,P329, P327,P39,P786	CALTRANS CONTRACT NO.: 04-0120F4 加州工程编号
REFERENCING CODE 参考规范 AWS D1.5-2002	ACCEPTANCE STANDARD接受标准 AWS D1.5-2002(Table 6.3)	PROCEDURE NO. 程序编号 ZPQC-UT-01
WELDING PROCESS 焊接方法 NA	JOINT TYPE 焊缝类型 NA	CALIBRATION DUE DATE 仪器校正有效期 Dec. 28ST ,2009

EQUIPMENT 设备	MANUFACTURER 制造商	MODEL NO. 样式编号	SERIAL NO. 序列编号
UT SCOPE	PANAMETRICS	EPOCH-4B	071565311, 061488510, 061495811, 070152011,
CALIBRATION BLOCK 试块	COUPLANT 耦合剂	MATERIAL/THICKNESS 材料厚度	
AWS IIW BLOCK TYPE II	C.M.C	A709M-345T2-Z	70/65mm

TRANSDUCER 探头

MANUFACTURER 制造商	ANGLE 角度	FREQUENCY 频率	SIZE 尺寸	MANUFACTURER 制造商	ANGLE 角度	FREQUENCY 频率	SIZE 尺寸
Changchao	70°	2.5MHz	18×18mm	Changchao	45°	2.5MHz	18×18mm
Changchao	0°	2.5MHz	20mm				
Reference Level 参考灵敏度					20dB		

Base metal inspected per AWS D1.5-2002 Section 6.19.5 0° UT OK.

WELD IDENTIFICATION 焊缝部件编号	INDICATION NO. 指示号	PROBE ANGLE 探测角度	FROM FACE 检测面	LEG（次数）	DECIBELS分贝 Indication Level a	Reference Level b	Attenuation Factor c	Indication Rating d	DISCONTINUITY 不连续性 LOCATION OF DISCONTINUITY 不连续位置(mm) Length 长度	Sound Path 声程	Depth from Surface 距表面深度	From'X 距X	From'Y 距Y	Discontinuity Evaluation 缺陷估计	Remark 备注
SA159		70				34								ACC.	100%
		45				34								ACC.	100%
		0	C			34								ACC.	100%
P326,P329,P327,P39		70				34								ACC.	100%
		45				34								ACC.	100%
		0	C			34								ACC.	100%
P786		70				34								ACC.	100%
		45				34								ACC.	100%

EXAMINED BY主探 Xu Rong gang	REVIEWED BY 审核 Li Qing
LEVEL - II SIGN / DATE 09.08.25	LEVEL - II SIGN / DATE 2009.08.25
质量经理 / QCM	用户CUSTOMER
签字 SIGN / 日期 DATE	签字 SIGN / 日期 DATE

(FORM# ZPQC-UT01)

REPORT OF ULTRASONIC EXAMINATION
UT探伤报告

REPORT NO. 报告编号 T787-UT-2166 DATE 2009.08.25 PAGE 2 OF 2 Revision No: 0

WELD IDENTIFICATION 焊缝部件编号	INDICATION NO. 指示号	PROBE ANGLE 探测角度	FROM FACE 检测面	LEG（次数）	DECIBELS分贝				DISCONTINUITY 不连续性					Discontinuity Evaluation 缺陷估计	Remark 备注
					Indication Level	Reference Level	Attenuation Factor	Indication Rating	LOCATION OF DISCONTINUITY 不连续位置(mm)						
					a	b	c	d	Length 长度	Sound Path 声程	Depth from Surface 距表面深度	From'X 距X	From'Y 距Y		
		0	C			34				-				ACC.	100%
AFTER T-WR336, 389, 390, 391, 346															
BLANK															

EXAMINED BY主探

Xu Rongqang

LEVEL - II SIGN / DATE 09.08.25

REVIEWED BY 审核

Li Liang

LEVEL - II SIGN / DATE 2009.08.25

质量经理 / QCM

签字 SIGN / 日期 DATE

用户CUSTOMER

签字 SIGN / 日期 DATE

(FORM# ZPQC-UT01)

REPORT OF MAGNETIC PARTICLE EXAMINATION

磁粉检测报告

REPORT NO. 报告编号 T787-MT-5646	DATE日期 2009.08.26	PAGE OF页码 1/1	Revision No: 0

PROJECT NO. 工程编号:	ZP06-787	CONTRACTOR: 用 户:	CALTRANS
DRAWING NO. 图号:	SA173,P401,P527,P185,P400,P1145 The 1st lift Tower(S)	CALTRANS CONTRACT NO.: 加州工程编号	04-0120F4
REFERENCING CODE 参考规范编码 AWS D1.5-2002	ACCEPTANCE STANDARD 接受标准 AWS D1.5-2002	PROCEDURE NO. 程序编号 ZPQC-MT-01	CALIBRATION DUE DATE 仪器校正有效期 Dec. 28ST ,2009
EQUIPMENT 设备 MT YOKE	MANUFACTURER 制造商 PARKER	MODEL NO. 样式编号 B310S	SERIAL NO. 连续编号 5395 5617 5620
MAGNETIZING METHOD 磁化方法	Continuous magnetic yoke 磁轭式连续法	CURRENT 电流	AC
PARTICLE TYPE 磁粉类型	Dry magnet powder 干磁粉	YOKE SPACING 磁轭间距	70～150mm
MATERIAL TO BE EXAMINED 检测材料	√ WELDING 焊接件 ☐ CASTING 铸件 ☐ FORGING 锻造	Material & thickness 母材,厚度	A709M-345T2-Z 10/60mm
WELDING PROCESS 焊接方法	NA	TYPE OF JOINT 焊缝类型	NA

WELD I.D. 焊缝编号	DISCONTINUITY不连续性			ACCEPT 接受	REJECT 拒收	REMARKS 备注
	INDICATION 指示	TYPE 类型	LENGTH IN mm 长度			
SA173				ACC.		100%MT
P401,P527,P185,P400				ACC.		100%MT
P1145				ACC.		100%MT
BASE METAL PER T-WR336 T-WR389 T-WR390 T-WR391 T-WR346						
BLANK						

EXAMINED BY主探 Xu Hai Xu Hai 09.08.26 LEVEL - II SIGN 签名 / DATE日期	REVIEWED BY 审核 Cai Xinxin LEVEL-II SIGN / DATE日期 09.08.26
质量经理 / QCM 签字 SIGN / 日期 DATE	用户CUSTOMER 签字 SIGN / 日期 DATE

(FORM# ZPQC-MT01)

REPORT OF MAGNETIC PARTICLE EXAMINATION

磁粉检测报告

REPORT NO. 报告编号 T787-MT-5645	DATE日期 2009.08.26	PAGE OF页码 1/1	Revision No: 0

PROJECT NO. 工程编号:	ZP06-787	CONTRACTOR: 用 户:	CALTRANS
DRAWING NO. 图号:	SA180,P232,P376,P24,P181 The 1st lift Tower(S)	CALTRANS CONTRACT NO.: 加州工程编号	04-0120F4
REFERENCING CODE 参考规范编码 AWS D1.5-2002	ACCEPTANCE STANDARD 接受标准 AWS D1.5-2002	PROCEDURE NO. 程序编号 ZPQC-MT-01	CALIBRATION DUE DATE 仪器校正有效期 Dec. 28ST ,2009
EQUIPMENT 设备 MT YOKE	MANUFACTURER 制造商 PARKER	MODEL NO. 样式编号 B310S	SERIAL NO. 连续编号 5395 5617 5620
MAGNETIZING METHOD 磁化方法	Continuous magnetic yoke 磁轭式连续法	CURRENT 电流	AC
PARTICLE TYPE 磁粉类型	Dry magnet powder 干磁粉	YOKE SPACING 磁轭间距	70～150mm
MATERIAL TO BE EXAMINED 检测材料	√ WELDING 焊接件 ☐ CASTING 铸件 ☐ FORGING 锻造	Material & thickness 母材,厚度	A709M-345T2-Z 46/60mm
WELDING PROCESS 焊接方法	NA	TYPE OF JOINT 焊缝类型	NA

WELD I.D. 焊缝编号	DISCONTINUITY不连续性			ACCEPT 接受	REJECT 拒收	REMARKS 备注
	INDICATION 指示	TYPE 类型	LENGTH IN mm 长度			
SA180				ACC.		100%MT
P232,P376,P24				ACC.		100%MT
P181				ACC.		100%MT
BASE METAL PER T-WR336 T-WR389 T-WR390 T-WR391 T-WR346						
BLANK						

EXAMINED BY主探 Xu Hai Xu Hai 09.08.26 LEVEL - II SIGN 签名 / DATE日期	REVIEWED BY 审核 Cai Xinxin LEVEL-II SIGN / DATE日期 09.08.26
质量经理 / QCM 签字 SIGN / 日期 DATE	用户CUSTOMER 签字 SIGN / 日期 DATE

(FORM# ZPQC-MT01)

REPORT OF MAGNETIC PARTICLE EXAMINATION

磁粉检测报告

REPORT NO. 报告编号 T787-MT-5644	DATE日期 2009.08.26	PAGE OF页码 1/1	Revision No: 0

PROJECT NO. 工程编号:	ZP06-787	CONTRACTOR: 用 户:	CALTRANS
DRAWING NO., 图号:	SA179,P226,P229,P122,P110,P179 The 1st lift Tower(S)	CALTRANS CONTRACT NO.: 加州工程编号	04-0120F4
REFERENCING CODE 参考规范编码 AWS D1.5-2002	ACCEPTANCE STANDARD 接受标准 AWS D1.5-2002	PROCEDURE NO. 程序编号 ZPQC-MT-01	CALIBRATION DUE DATE 仪器校正有效期 Dec. 28ST ,2009
EQUIPMENT 设备 MT YOKE	MANUFACTURER 制造商 PARKER	MODEL NO. 样式编号 B310S	SERIAL NO. 连续编号 5395 5617 5620
MAGNETIZING METHOD 磁化方法	Continuous magnetic yoke 磁轭式连续法	CURRENT 电流	AC
PARTICLE TYPE 磁粉类型	Dry magnet powder 干磁粉	YOKE SPACING 磁轭间距	70～150mm
MATERIAL TO BE EXAMINED 检测材料	√ WELDING 焊接件 ☐ CASTING 铸件 ☐ FORGING 锻造	Material & thickness 母材,厚度	A709M-345T2-Z 45/60mm
WELDING PROCESS 焊接方法	NA	TYPE OF JOINT 焊缝类型	NA

WELD I.D. 焊缝编号	DISCONTINUITY不连续性			ACCEPT 接受	REJECT 拒收	REMARKS 备注
	INDICATION 指示	TYPE 类型	LENGTH IN mm 长度			
SA179				ACC.		100%MT
P226,P229,P122,P110				ACC.		100%MT
P179				ACC.		100%MT
BASE METAL PER T-WR336 T-WR389 T-WR390 T-WR391 T-WR346						
BLANK						

EXAMINED BY主探 Xu Hai Xu Hai 09.08.26 LEVEL - II SIGN 签名 / DATE日期	REVIEWED BY 审核 Cai Xinxin LEVEL-II SIGN / DATE日期 09.08.26
质量经理 / QCM 签字 SIGN / 日期 DATE	用户CUSTOMER 签字 SIGN / 日期 DATE

(FORM# ZPQC-MT01)

REPORT OF MAGNETIC PARTICLE EXAMINATION

磁粉检测报告

REPORT NO. 报告编号 T787-MT-5643	DATE日期 2009.08.26	PAGE OF页码 1/1	Revision No: 0

PROJECT NO. 工程编号:	ZP06-787	CONTRACTOR: 用 户:	CALTRANS
DRAWING NO. 图号:	SA178,P163,P410,P110,P1145 The 1st lift Tower(S)	CALTRANS CONTRACT NO.: 加州工程编号	04-0120F4
REFERENCING CODE 参考规范编码 AWS D1.5-2002	ACCEPTANCE STANDARD 接受标准 AWS D1.5-2002	PROCEDURE NO. 程序编号 ZPQC-MT-01	CALIBRATION DUE DATE 仪器校正有效期 Dec. 28ST ,2009
EQUIPMENT 设备 MT YOKE	MANUFACTURER 制造商 PARKER	MODEL NO. 样式编号 B310S	SERIAL NO. 连续编号 5395 5617 5620
MAGNETIZING METHOD 磁化方法	Continuous magnetic yoke 磁轭式连续法	CURRENT 电流	AC
PARTICLE TYPE 磁粉类型	Dry magnet powder 干磁粉	YOKE SPACING 磁轭间距	70～150mm
MATERIAL TO BE EXAMINED 检测材料	√ WELDING 焊接件 ☐ CASTING 铸件 ☐ FORGING 锻造	Material & thickness 母材,厚度	A709M-345T2-Z 45/60mm
WELDING PROCESS 焊接方法	NA	TYPE OF JOINT 焊缝类型	NA

WELD I.D. 焊缝编号	DISCONTINUITY不连续性			ACCEPT 接受	REJECT 拒收	REMARKS 备注
	INDICATION 指示	TYPE 类型	LENGTH IN mm 长度			
SA178				ACC.		100%MT
P163,P410,P110				ACC.		100%MT
P1145				ACC.		100%MT
BASE METAL PER T-WR336 T-WR389 T-WR390 T-WR391 T-WR346						
BLANK						

EXAMINED BY主探 Xu Hai Xu Hai 09.08.26 LEVEL - II SIGN 签名 / DATE日期	REVIEWED BY 审核 Cai Xinxin LEVEL-II SIGN / DATE日期 09.08.26
质量经理 / QCM 签字 SIGN / 日期 DATE	用户CUSTOMER 签字 SIGN / 日期 DATE

(FORM# ZPQC-MT01)

REPORT OF MAGNETIC PARTICLE- EXAMINATION

磁粉检测报告

REPORT NO. 报告编号 T787-MT-5642	DATE日期 2009.08.26	PAGE OF页码 1/1	Revision No: 0

PROJECT NO. 工程编号:	ZP06-787	CONTRACTOR: 用 户:	CALTRANS
DRAWING NO. 图号:	SA159,P326,P329,P327,P39,P786 The 1st lift Tower(S)	CALTRANS CONTRACT NO.: 加州工程编号	04-0120F4
REFERENCING CODE 参考规范编码 AWS D1.5-2002	ACCEPTANCE STANDARD 接受标准 AWS D1.5-2002	PROCEDURE NO. 程序编号 ZPQC-MT-01	CALIBRATION DUE DATE 仪器校正有效期 Dec. 28ST ,2009
EQUIPMENT 设备 MT YOKE	MANUFACTURER 制造商 PARKER	MODEL NO. 样式编号 B310S	SERIAL NO. 连续编号 5395 5617 5620
MAGNETIZING METHOD 磁化方法	Continuous magnetic yoke 磁轭式连续法	CURRENT 电流	AC
PARTICLE TYPE 磁粉类型	Dry magnet powder 干磁粉	YOKE SPACING 磁轭间距	70～150mm
MATERIAL TO BE EXAMINED 检测材料	√ WELDING 焊接件 ☐ CASTING 铸件 ☐ FORGING 锻造	Material & thickness 母材,厚度	A709M-345T2-Z 70/65mm
WELDING PROCESS 焊接方法	NA	TYPE OF JOINT 焊缝类型	NA

WELD I.D. 焊缝编号	DISCONTINUITY不连续性			ACCEPT 接受	REJECT 拒收	REMARKS 备注
	INDICATION 指示	TYPE 类型	LENGTH IN mm 长度			
SA159				ACC.		100%MT
P326,P329,P327,P39				ACC.		100%MT
P786				ACC.		100%MT
BASE METAL PER T-WR336 T-WR389 T-WR390 T-WR391 T-WR346						
BLANK						

EXAMINED BY主探 Xu Hai Xu Hai LEVEL - II SIGN 签名 / DATE日期 09.08.26	REVIEWED BY 审核 Cai Xinxin LEVEL-II SIGN / DATE日期 09.08.26
质量经理 / QCM 签字 SIGN / 日期 DATE	用户CUSTOMER 签字 SIGN / 日期 DATE

(FORM# ZPQC-MT01)

Hardness Survey on Buttering area at Long Stiff End

Location : 1st Lift South Tower (Skin C)

Reading taken at	Location	Reading 1	Reading 2	Reading 3	Ave.
Buttering weld	1	180	182	183	182
Buttering weld	2	183	207	181	190
Buttering weld	3	199	179	182	187
HAZ	4	195	196	192	194
HAZ	5	195	211	201	202
HAZ	6	207	219	187	204
Base Metal	7	232	220	230	227
Base Metal	8	190	193	188	190
Base Metal	9	186	188	203	192
Long Stiff edge**	10	157	156	157	157

***Addition Point No. 10 is done in edge of Long Stiff*

Location : 1st Lift East Tower (Skin E)

Reading taken at	Location	Reading 1	Reading 2	Reading 3	Ave.
Buttering weld	1	188	184	190	187
Buttering weld	2	172	191	201	188
Buttering weld	3	175	198	192	188
HAZ	4	202	186	190	193
HAZ	5	195	175	180	183
HAZ*	6	Nil	Nil	Nil	0
Base Metal	7	166	162	178	169
Base Metal	8	171	183	185	180
Base Metal	9	175	177	180	177

**HAZ cannot be identified after etching, no reading is taken.*

Note :

1. 5 Readings are taken in each tested point in general, highest and lowest values are deleted and not used.

Location of Hardness Indentation Points

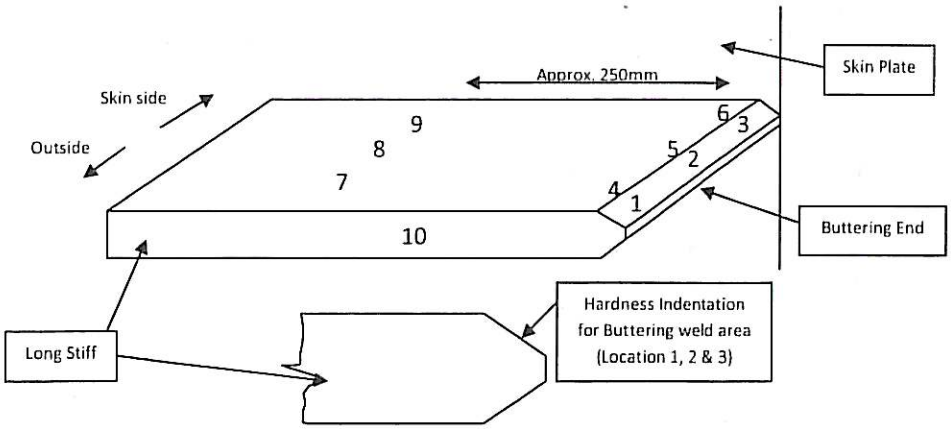

Photos Reference for Hardness Survey in Long Stiff

A. 1st Lift South Tower (Skin C)

	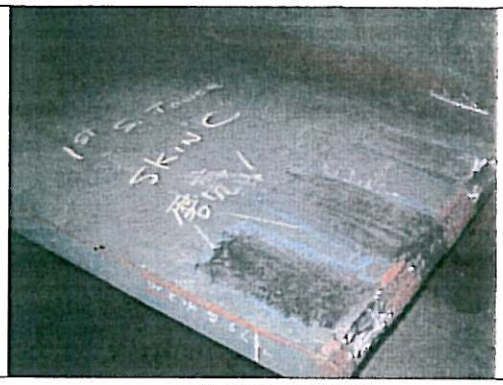
Tested Long Stiff in Skin C	Tested Locations
Hardness Checking Process	Hardness reading (Hv 180) in weld
Hardness Reading (Hv 195) in HAZ	

Photos Reference for Hardness Survey in Long Stiff

B. 1st Lift East Tower (Skin E)

1st Lift East Tower Skin E

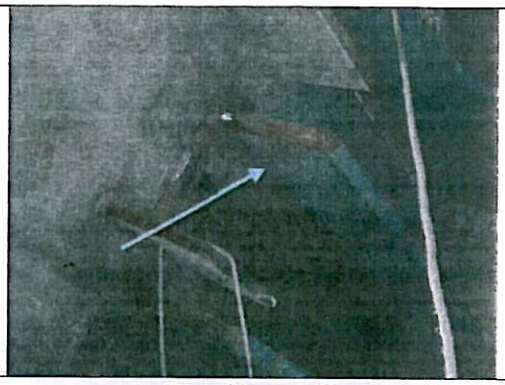

Tested Long Stiff

Check on Base Metal

Base Metal Hardness (Hv 162)

Check on Buttering weld (Hv 190)

Check on HAZ (difficult to locate HAZ)

AMERICAN BRIDGE/FLUOR ENTERPRISES, a JV
P.O. BOX 23223 Oakland, CA 94623
Phone (510) 419-0120 / Fax (510) 839-0666

NCR PROPOSED RESOLUTION

To: CALTRANS - SAS Superstructure
333 Burma Road
Oakland CA 94607

Attention: Pursell, Gary
Resident Engineer

Ref: 05.03.06-000184

Subject: NCR No. ZPMC-0190

Dated: **05-Oct-2009**

Contract No.: 04-0120F4
04-SF-80-13.2 / 13.9

Job Name: SAS Superstructure

Document No.: **ABF-NPR-000181 Rev: 03**

Contractor's Proposed Resolution:

Reference Resolution: The report has been revised and now reflects the true results of the calibrations and tests performed. ZPMC requests closure of this NCR.

CT china has discussed the UT report data submitted referring to acceptance criteria and reference level db readings being reported incorrectly. ABF has conferred with ZPMC and determined the acceptance criteria was not entered into the report correctly and the reference level db's were entered incorrectly into the UT report. The report has been revised and now reflects the true results of the calibrations and tests performed. ZPMC requests closure of this NCR.

Submitted by:

Attachment(s): ABF-NPR-000181R03;

Caltrans' comments:

Status: CLO

Date: 07-Oct-2009

Based on the submitted documentation and verbal clarification from the Foreign QA Manager for ABF JV, the proposed resolution is acceptable.

The Department concurs that Non-Conformance ZPMC-190 is closed.

Submitted by: Kennedy, Scott

Date: 07-Oct-2009

Attachment(s):

REPORT OF ULTRASONIC EXAMINATION
UT探伤报告

REPORT NO. 报告编号 T787-UT-2138	DATE 2009.08.21	PAGE 1 OF 3		Revision No: 0
PROJECT NO. :工程编号 ZP06-787			CONTRACTOR : CALTRANS	
ITEMS NAME: 部件名称 FIRST LIFTING TOWER(E)	DRAWING NO.: 图号 ESD1-SA237/233		CALTRANS CONTRACT NO.: 04-0120F4 加州工程编号	
REFERENCING CODE 参考规范 AWS D1.5-2002	ACCEPTANCE STANDARD接受标准 AWS D1.5-2002(Table 6.3)		PROCEDURE NO. 程序编号 ZPQC-UT-01	
WELDING PROCESS 焊接方法 FCAW	JOINT TYPE 焊缝类型 NA		CALIBRATION DUE DATE仪器校正有效期 Dec. 28ST ,2009	
EQUIPMENT 设备 UT SCOPE	MANUFACTURER 制造商 PANAMETRICS	MODEL NO. 样式编号 EPOCH-4B	SERIAL NO. 序列编号 071565311, 061488510, 061495811, 070152011,	
CALIBRATION BLOCK 试块 AWS IIW BLOCK TYPE II	COUPLANT 耦合剂 C.M.C	MATERIAL/THICKNESS 材料厚度 A709M-345T2-Z 70/65/45/60/80mm		

TRANSDUCER 探头

MANUFACTURER 制造商	ANGLE 角度	FREQUENCY 频率	SIZE 尺寸	MANUFACTURER 制造商	ANGLE 角度	FREQUENCY 频率	SIZE 尺寸
Changchao	70°	2.5MHz	18×18mm	Changchao	45°	2.5MHz	18×18mm
Changchao	0°	2.5MHz	20mm	Changchao	60°	2.5MHz	18×18mm

Reference Level 参考灵敏度 20dB

Base metal inspected per AWS D1.5-2002 Section 6.19.5 0° UT OK.

WELD IDENTIFICATION 焊缝部件编号	INDICATION NO. 指示号	PROBE ANGLE 探测角度	FROM FACE 检测面	LEG (次数)	DECIBELS分贝 Indication Level a	Reference Level b	Attenuation Factor c	Indication Rating d	DISCONTINUITY 不连续性 LOCATION OF DISCONTINUITY 不连续位置(mm) Length 长度	Sound Path 声程	Depth from Surface 距表面深度	From'X 距X	From'Y 距Y	Discontinuity Evaluation 缺陷估计	Remark 备注
SA237		70				35								ACC.	100%
		45				33								ACC.	100%
		0				20								ACC.	100%
P336,P1028,P324,P352		70				35								ACC.	100%
		45				33								ACC.	100%
		0				20								ACC.	100%
P326		70				35								ACC.	100%
		45				33								ACC.	100%

EXAMINED BY主探 Rai Gongchang LEVEL - II SIGN / DATE 09.08.21	REVIEWED BY 审核 Tang Xing chen LEVEL - II SIGN / DATE 09.08.21
质量经理 / QCM Li Yanhua 8/21/09 签字 SIGN / 日期 DATE	用户CUSTOMER 签字 SIGN / 日期 DATE

(FORM# ZPQC-UT01)

REPORT OF ULTRASONIC EXAMINATION
UT探伤报告

REPORT NO. 报告编号 T787-UT-2138 DATE 2009.08.21 PAGE 2 OF 3 Revision No: 0

WELD IDENTIFICATION 焊缝部件编号	INDICATION NO. 指示号	PROBE ANGLE 探测角度	FROM FACE 检测面	LEG（次数）	DECIBELS分贝 Indication Level a	Reference Level b	Attenuation Factor c	Indication Rating d	DISCONTINUITY 不连续性 LOCATION OF DISCONTINUITY 不连续位置(mm) Length 长度	Sound Path 声程	Depth from Surface 距表面深度	From'X 距X	From'Y 距Y	Discontinuity Evaluation 缺陷估计	Remark 备注
		0				20								ACC.	100%
P540,SA279,P1280		70				35								ACC.	100%
		45				33								ACC.	100%
		0				20								ACC.	100%
P189,P378,P379,P388, P507		70				35								ACC.	100%
		60				33								ACC.	100%
		0				20								ACC.	100%
P1145		70				35								ACC.	100%
		60				33								ACC.	100%
		0				20								ACC.	100%
P1294,SA294,P143,P12 91		70				35								ACC.	100%
		45				33								ACC.	100%
		0				20								ACC.	100%
P48,P397,P394,P373,P 390,P389,P588		70				35								ACC.	100%
		60				33								ACC.	100%
		0				20								ACC.	100%
P179		70				35								ACC.	100%
		60				33								ACC.	100%
		0				20								ACC.	100%
P1287,SA295		70				35								ACC.	100%
		45				33								ACC.	100%
		0				20								ACC.	100%

EXAMINED BY主探 Dai Gengsheng
LEVEL - II SIGN / DATE 09.08.21

REVIEWED BY 审核 Fangxingzhen
LEVEL - II SIGN / DATE 09.08.21

质量经理 / QCM Luyanhua 8/21/09
签字 SIGN / 日期 DATE

用户CUSTOMER
签字 SIGN / 日期 DATE

(FORM# ZPQC-UT01)

REPORT OF ULTRASONIC EXAMINATION
UT探伤报告

REPORT NO. 报告编号 T787-UT-2138 DATE 2009.08.21 PAGE 3 OF 3 Revision No: 0

WELD IDENTIFICATION 焊缝部件编号	INDICATION NO. 指示号	PROBE ANGLE 探测角度	FROM FACE 检测面	LEG（次数）	DECIBELS分贝 Indication Level a	Reference Level b	Attenuation Factor c	Indication Rating d	DISCONTINUITY 不连续性 LOCATION OF DISCONTINUITY 不连续位置(mm) Length 长度	Sound Path 声程	Depth from Surface 距表面深度	From'X 距X	From'Y 距Y	Discontinuity Evaluation 缺陷估计	Remark 备注
P285,P20,P112,P413		70				35								ACC.	100%
		60				33								ACC.	100%
		0				20								ACC.	100%
P181		70				35								ACC.	100%
		60				33								ACC.	100%
		0				20								ACC.	100%
P837,SA225,P1302		70				35								ACC.	100%
		60				33								ACC.	100%
		45				33								ACC.	100%
		0				20								ACC.	100%
P155,P589,P503,P190		70				35								ACC.	100%
		60				33								ACC.	100%
		0				20								ACC.	100%
P1145		70				35								ACC.	100%
		60				33								ACC.	100%
		0				20								ACC.	100%
BASE METAL PER T-WR336, 389, 390, 391, 346															
BLANK															

EXAMINED BY主探 Dai Gengsheng
LEVEL - II SIGN / DATE 09.08.21

REVIEWED BY 审核 Tang Xingshan
LEVEL - II SIGN / DATE 9-08-21

质量经理 / QCM Liupenhua 8/21/09
签字 SIGN / 日期 DATE

用户CUSTOMER
签字 SIGN / 日期 DATE

(FORM# ZPQC-UT01)

REPORT OF ULTRASONIC EXAMINATION
UT探伤报告

REPORT NO. 报告编号 T787-UT-2170	DATE 2009.08.25	PAGE 1 OF 2		Revision No: 0

PROJECT NO. :工程编号 ZP06-787		CONTRACTOR : CALTRANS
ITEMS NAME: 部件名称 FIRST LIFTING TOWER(S)	DRAWING NO.: 图号 SA173,P401,P527, P185,P400,P1145	CALTRANS CONTRACT NO.: 04-0120F4 加州工程编号
REFERENCING CODE 参考规范 AWS D1.5-2002	ACCEPTANCE STANDARD接受标准 AWS D1.5-2002(Table 6.3)	PROCEDURE NO. 程序编号 ZPQC-UT-01
WELDING PROCESS 焊接方法 NA	JOINT TYPE 焊缝类型 NA	CALIBRATION DUE DATE 仪器校正有效期 Dec. 28ST ,2009

EQUIPMENT 设备 UT SCOPE	MANUFACTURER 制造商 PANAMETRICS	MODEL NO. 样式编号 EPOCH-4B	SERIAL NO. 序列编号 071565311, 061488510, 061495811, 070152011,
CALIBRATION BLOCK 试块 AWS IIW BLOCK TYPE II	COUPLANT 耦合剂 C.M.C	MATERIAL/THICKNESS 材料厚度 A709M-345T2-Z	10/60mm

TRANSDUCER 探头

MANUFACTURER 制造商	ANGLE 角度	FREQUENCY 频率	SIZE 尺寸	MANUFACTURER 制造商	ANGLE 角度	FREQUENCY 频率	SIZE 尺寸
Changchao	70°	2.5MHz	18×18mm	Changchao	60°	2.5MHz	18×18mm
Changchao	0°	2.5MHz	20mm				

Reference Level 参考灵敏度 20dB

Base metal inspected per AWS D1.5-2002 Section 6.19.5 0° UT OK.

WELD IDENTIFICATION 焊缝部件编号	INDICATION NO. 指示号	PROBE ANGLE 探测角度	FROM FACE 检测面	LEG（次数）	DECIBELS分贝 Indication Level a	Reference Level b	Attenuation Factor c	Indication Rating d	DISCONTINUITY 不连续性 LOCATION OF DISCONTINUITY 不连续位置(mm) Length 长度	Sound Path 声程	Depth from Surface 距表面深度	From'X 距X	From'Y 距Y	Discontinuity Evaluation 缺陷估计	Remark 备注
SA173		70				35								ACC.	100%
		60				33								ACC.	100%
		0				20								ACC.	100%
P401,P527,P185,P400		70				35								ACC.	100%
		60				33								ACC.	100%
		0				20								ACC.	100%
P1145		70				35								ACC.	100%
		60				33								ACC.	100%

EXAMINED BY主探 Xu Rongqiang. LEVEL - II SIGN / DATE 09.08.25	REVIEWED BY 审核 Tang Xingchen LEVEL - II SIGN / DATE 09.08.25
质量经理 / QCM 签字 SIGN / 日期 DATE 8/25/09	用户CUSTOMER 签字 SIGN / 日期 DATE

(FORM# ZPQC-UT01)

REPORT OF ULTRASONIC EXAMINATION
UT探伤报告

REPORT NO. 报告编号 T787-UT-2170 DATE 2009.08.25 PAGE 2 OF 2 Revision No: 0

WELD IDENTIFICATION 焊缝部件编号	INDICATION NO. 指示号	PROBE ANGLE 探测角度	FROM FACE 检测面	LEG（次数）	DECIBELS分贝				DISCONTINUITY 不连续性					Discontinuity Evaluation 缺陷估计	Remark 备注
					Indication Level	Reference Level	Attenuation Factor	Indication Rating	LOCATION OF DISCONTINUITY 不连续位置(mm)						
					a	b	c	d	Length 长度	Sound Path 声程	Depth from Surface 距表面深度	From'X 距X	From'Y 距Y		
		0				20								ACC.	100%
AFTER T-WR336, 389, 390, 391, 346															
BLANK															

EXAMINED BY主探 Xu Rongqing
LEVEL - II SIGN / DATE 09.08.25

REVIEWED BY 审核 Tang Yongshan
LEVEL - II SIGN / DATE 09.08.25

质量经理 / QCM Lu Yanhua 8/25/09
签字 SIGN / 日期 DATE

用户CUSTOMER
签字 SIGN / 日期 DATE

(FORM# ZPQC-UT01)

REPORT OF ULTRASONIC EXAMINATION
UT探伤报告

REPORT NO. 报告编号 T787-UT-2169	DATE 2009.08.25	PAGE 1 OF 2		Revision No: 0

PROJECT NO. :工程编号 ZP06-787		CONTRACTOR : CALTRANS
ITEMS NAME: 部件名称 FIRST LIFTING TOWER(S)	DRAWING NO.: 图号 SA180,P232,P376, P24,P181	CALTRANS CONTRACT NO.: 04-0120F4 加州工程编号
REFERENCING CODE 参考规范 AWS D1.5-2002	ACCEPTANCE STANDARD接受标准 AWS D1.5-2002(Table 6.3)	PROCEDURE NO. 程序编号 ZPQC-UT-01
WELDING PROCESS 焊接方法 NA	JOINT TYPE 焊缝类型 NA	CALIBRATION DUE DATE 仪器校正有效期 Dec. 28ST ,2009

EQUIPMENT 设备 UT SCOPE	MANUFACTURER 制造商 PANAMETRICS	MODEL NO. 样式编号 EPOCH-4B	SERIAL NO. 序列编号 071565311, 061488510, 061495811, 070152011,
CALIBRATION BLOCK 试块 AWS IIW BLOCK TYPE II	COUPLANT 耦合剂 C.M.C	MATERIAL/THICKNESS 材料厚度 A709M-345T2-Z 45/60mm	

TRANSDUCER 探头

MANUFACTURER 制造商	ANGLE 角度	FREQUENCY 频率	SIZE 尺寸	MANUFACTURER 制造商	ANGLE 角度	FREQUENCY 频率	SIZE 尺寸
Changchao	70°	2.5MHz	18×18mm	Changchao	60°	2.5MHz	18×18mm
Changchao	0°	2.5MHz	20mm				

Reference Level 参考灵敏度 20dB

Base metal inspected per AWS D1.5-2002 Section 6.19.5 0° UT OK.

WELD IDENTIFICATION 焊缝部件编号	INDICATION NO. 指示号	PROBE ANGLE 探测角度	FROM FACE 检测面	LEG（次数）	DECIBELS分贝 Indication Level a	Reference Level b	Attenuation Factor c	Indication Rating d	DISCONTINUITY 不连续性 LOCATION OF DISCONTINUITY 不连续位置(mm) Length 长度	Sound Path 声程	Depth from Surface 距表面深度	From'X 距X	From'Y 距Y	Discontinuity Evaluation 缺陷估计	Remark 备注
SA180		70				35								ACC.	100%
		0				20								ACC.	100%
P232,P376,P24		70				35								ACC.	100%
		60				33								ACC.	100%
		0				20								ACC.	100%
P181		70				35								ACC.	100%
		60				33								ACC.	100%
		0				20								ACC.	100%

EXAMINED BY主探 Xu Kongqeng LEVEL - II SIGN / DATE 09.08-25	REVIEWED BY 审核 Tang Xingshan LEVEL - II SIGN / DATE 09.08-25
质量经理 / QCM Luoyanshen 8/25/09 签字 SIGN / 日期 DATE	用户CUSTOMER 签字 SIGN / 日期 DATE

(FORM# ZPQC-UT01)

REPORT OF ULTRASONIC EXAMINATION
UT探伤报告

REPORT NO. 报告编号 T787-UT-2169 DATE 2009.08.25 PAGE 2 OF 2 Revision No: 0

WELD IDENTIFICATION 焊缝部件编号	INDICATION NO. 指示号	PROBE ANGLE 探测角度	FROM FACE 检测面	LEG（次数）	DECIBELS分贝				DISCONTINUITY 不连续性					Discontinuity Evaluation 缺陷估计	Remark 备注
					Indication Level	Reference Level	Attenuation Factor	Indication Rating	LOCATION OF DISCONTINUITY 不连续位置(mm)						
					a	b	c	d	Length 长度	Sound Path 声程	Depth from Surface 距表面深度	From'X 距X	From'Y 距Y		
AFTER T-WR336, 389, 390, 391, 346															
BLANK															

EXAMINED BY主探
XuRongqing
LEVEL - II SIGN / DATE 09.08.25

REVIEWED BY 审核
TangXingchan
LEVEL - II SIGN / DATE 09.08.25

质量经理 / QCM
LuZhenhua 8/25/09
签字 SIGN / 日期 DATE

用户CUSTOMER
签字 SIGN / 日期 DATE

(FORM# ZPQC-UT01)

REPORT OF ULTRASONIC EXAMINATION
UT探伤报告

REPORT NO. 报告编号 T787-UT-2168	DATE 2009.08.25	PAGE 1 OF 2	Revision No: 0

PROJECT NO. :工程编号 ZP06-787		CONTRACTOR : CALTRANS
ITEMS NAME: 部件名称 FIRST LIFTING TOWER(S)	DRAWING NO.: 图号 SA178,P163,P401, P110,P1145	CALTRANS CONTRACT NO.: 04-0120F4 加州工程编号
REFERENCING CODE 参考规范 AWS D1.5-2002	ACCEPTANCE STANDARD接受标准 AWS D1.5-2002(Table 6.3)	PROCEDURE NO. 程序编号 ZPQC-UT-01
WELDING PROCESS 焊接方法 NA	JOINT TYPE 焊缝类型 NA	CALIBRATION DUE DATE 仪器校正有效期 Dec. 28ST ,2009

EQUIPMENT 设备 UT SCOPE	MANUFACTURER 制造商 PANAMETRICS	MODEL NO. 样式编号 EPOCH-4B	SERIAL NO. 序列编号 071565311, 061488510, 061495811, 070152011,
CALIBRATION BLOCK 试块 AWS IIW BLOCK TYPE II	COUPLANT 耦合剂 C.M.C	MATERIAL/THICKNESS 材料厚度 A709M-345T2-Z	45/60mm

TRANSDUCER 探头

MANUFACTURER 制造商	ANGLE 角度	FREQUENCY 频率	SIZE 尺寸	MANUFACTURER 制造商	ANGLE 角度	FREQUENCY 频率	SIZE 尺寸
Changchao	70°	2.5MHz	18×18mm	Changchao	60°	2.5MHz	18×18mm
Changchao	0°	2.5MHz	20mm	Changchao	45°	2.5MHz	18×18mm

Reference Level 参考灵敏度 20dB

Base metal inspected per AWS D1.5-2002 Section 6.19.5 0° UT OK.

WELD IDENTIFICATION 焊缝部件编号	INDICATION NO. 指示号	PROBE ANGLE 探测角度	FROM FACE 检测面	LEG（次数）	DECIBELS分贝 Indication Level a	Reference Level b	Attenuation Factor c	Indication Rating d	DISCONTINUITY 不连续性 LOCATION OF DISCONTINUITY 不连续位置(mm) Length 长度	Sound Path 声程	Depth from Surface 距表面深度	From'X 距X	From'Y 距Y	Discontinuity Evaluation 缺陷估计	Remark 备注
SA178		70				35								ACC.	100%
		0				20								ACC.	100%
P163,P401,P110		70				35								ACC.	100%
		60				33								ACC.	100%
		45				33								ACC.	100%
		0				20								ACC.	100%
P1145		70				35								ACC.	100%
		60				33								ACC.	100%

EXAMINED BY主探 Xu Rongqing LEVEL - II SIGN / DATE 09.08.25	REVIEWED BY 审核 Tang Xingshan LEVEL - II SIGN / DATE 09.09.25
质量经理 / QCM 签字 SIGN / 日期 DATE 8/25/09	用户CUSTOMER 签字 SIGN / 日期 DATE

(FORM# ZPQC-UT01)

REPORT OF ULTRASONIC EXAMINATION
UT探伤报告

REPORT NO. 报告编号 T787-UT-2168 DATE 2009.08.25 PAGE 2 OF 2 Revision No: 0

WELD IDENTIFICATION 焊缝部件编号	INDICATION NO. 指示号	PROBE ANGLE 探测角度	FROM FACE 检测面	LEG（次数）	DECIBELS分贝				DISCONTINUITY 不连续性					Discontinuity Evaluation 缺陷估计	Remark 备注
					Indication Level	Reference Level	Attenuation Factor	Indication Rating	LOCATION OF DISCONTINUITY 不连续位置(mm)						
					a	b	c	d	Length 长度	Sound Path 声程	Depth from Surface 距表面深度	From'X 距X	From'Y 距Y		
		0				20								ACC.	100%
AFTER T-WR336, 389, 390, 391, 346															
BLANK															

EXAMINED BY主探
XuRongqang
LEVEL - II SIGN / DATE 09.08.25

REVIEWED BY 审核
Pang Xingshun
LEVEL - II SIGN / DATE 09.08.25

质量经理 / QCM
Liu Yanhua 8/25/09
签字 SIGN / 日期 DATE

用户CUSTOMER
签字 SIGN / 日期 DATE

(FORM# ZPQC-UT01)

REPORT OF ULTRASONIC EXAMINATION
UT探伤报告

REPORT NO. 报告编号 T787-UT-2167	DATE 2009.08.25	PAGE 1 OF 2	Revision No: 0

PROJECT NO. :工程编号 ZP06-787		CONTRACTOR : CALTRANS
ITEMS NAME: 部件名称 FIRST LIFTING TOWER(S)	DRAWING NO.: 图号 SA179,P226,P229, P122,P110,P179	CALTRANS CONTRACT NO.: 04-0120F4 加州工程编号
REFERENCING CODE 参考规范 AWS D1.5-2002	ACCEPTANCE STANDARD接受标准 AWS D1.5-2002(Table 6.3)	PROCEDURE NO. 程序编号 ZPQC-UT-01
WELDING PROCESS 焊接方法 NA	JOINT TYPE 焊缝类型 NA	CALIBRATION DUE DATE 仪器校正有效期 Dec. 28ST ,2009

EQUIPMENT 设备	MANUFACTURER 制造商	MODEL NO. 样式编号	SERIAL NO. 序列编号
UT SCOPE	PANAMETRICS	EPOCH-4B	071565311, 061488510, 061495811, 070152011,
CALIBRATION BLOCK 试块 AWS IIW BLOCK TYPE Ⅱ	COUPLANT 耦合剂 C.M.C	MATERIAL/THICKNESS 材料厚度 A709M-345T2-Z	45/60mm

TRANSDUCER 探头

MANUFACTURER 制造商	ANGLE 角度	FREQUENCY 频率	SIZE 尺寸	MANUFACTURER 制造商	ANGLE 角度	FREQUENCY 频率	SIZE 尺寸
Changchao	70°	2.5MHz	18×18mm	Changchao	60°	2.5MHz	18×18mm
Changchao	0°	2.5MHz	20mm	Changchao	45°	2.5MHz	18×18mm

Reference Level 参考灵敏度 20dB

Base metal inspected per AWS D1.5-2002 Section 6.19.5 0° UT OK.

WELD IDENTIFICATION 焊缝部件编号	INDICATION NO. 指示号	PROBE ANGLE 探测角度	FROM FACE 检测面	LEG（次数）	DECIBELS分贝 Indication Level a	Reference Level b	Attenuation Factor c	Indication Rating d	DISCONTINUITY 不连续性 LOCATION OF DISCONTINUITY 不连续位置(mm) Length 长度	Sound Path 声程	Depth from Surface 距表面深度	From'X 距X	From'Y 距Y	Discontinuity Evaluation 缺陷估计	Remark 备注
SA179		70				35								ACC.	100%
		0				20								ACC.	100%
P226,P229,P122,P110		70				35								ACC.	100%
		60				33								ACC.	100%
		45				33								ACC.	100%
		0				20								ACC.	100%
P179		70				35								ACC.	100%
		60				33								ACC.	100%

EXAMINED BY主探 Xu Rongqiang LEVEL - II SIGN / DATE 09.08.25	REVIEWED BY 审核 Tang Yongshan LEVEL - II SIGN / DATE 09.08.25
质量经理 / QOM 签字 SIGN / 日期 DATE 8/25/09	用户CUSTOMER 签字 SIGN / 日期 DATE

(FORM# ZPQC-UT01)

REPORT OF ULTRASONIC EXAMINATION
UT探伤报告

REPORT NO. 报告编号 T787-UT-2167 DATE 2009.08.25 PAGE 2 OF 2 Revision No: 0

WELD IDENTIFICATION 焊缝部件编号	INDICATION NO. 指示号	PROBE ANGLE 探测角度	FROM FACE 检测面	LEG (次数)	DECIBELS分贝				DISCONTINUITY 不连续性					Discontinuity Evaluation 缺陷估计	Remark 备注
					Indication Level	Reference Level	Attenuation Factor	Indication Rating	LOCATION OF DISCONTINUITY 不连续位置(mm)						
					a	b	c	d	Length 长度	Sound Path 声程	Depth from Surface 距表面深度	From'X 距X	From'Y 距Y		
		0				20								ACC.	100%
AFTER T-WR336, 389, 390, 391, 346															
BLANK															

EXAMINED BY主探
Xu Rongqang
LEVEL - II SIGN / DATE 09.08.25

REVIEWED BY 审核
Tang Xingshan
LEVEL - II SIGN / DATE 09.08.25

质量经理 / QCM
Liuyanhua 8/25/09
签字 SIGN / 日期 DATE

用户CUSTOMER
签字 SIGN / 日期 DATE

(FORM# ZPQC-UT01)

REPORT OF ULTRASONIC EXAMINATION
UT探伤报告

REPORT NO. 报告编号 T787-UT-2166	DATE 2009.08.25	PAGE 1 OF 2		Revision No: 0

PROJECT NO. :工程编号 ZP06-787		CONTRACTOR : CALTRANS
ITEMS NAME: 部件名称 FIRST LIFTING TOWER(S)	DRAWING NO.: 图号 SA159,P326,P329, P327,P39,P786	CALTRANS CONTRACT NO.: 04-0120F4 加州工程编号
REFERENCING CODE 参考规范 AWS D1.5-2002	ACCEPTANCE STANDARD接受标准 AWS D1.5-2002(Table 6.3)	PROCEDURE NO. 程序编号 ZPQC-UT-01
WELDING PROCESS 焊接方法 NA	JOINT TYPE 焊缝类型 NA	CALIBRATION DUE DATE 仪器校正有效期 Dec. 28ST ,2009

EQUIPMENT 设备 UT SCOPE	MANUFACTURER 制造商 PANAMETRICS	MODEL NO. 样式编号 EPOCH-4B	SERIAL NO. 序列编号 071565311, 061488510, 061495811, 070152011,
CALIBRATION BLOCK 试块 AWS IIW BLOCK TYPE II	COUPLANT 耦合剂 C.M.C	MATERIAL/THICKNESS 材料厚度 A709M-345T2-Z 70/65mm	

TRANSDUCER 探头

MANUFACTURER 制造商	ANGLE 角度	FREQUENCY 频率	SIZE 尺寸	MANUFACTURER 制造商	ANGLE 角度	FREQUENCY 频率	SIZE 尺寸
Changchao	70°	2.5MHz	18×18mm	Changchao	45°	2.5MHz	18×18mm
Changchao	0°	2.5MHz	20mm				

Reference Level 参考灵敏度 20dB

Base metal inspected per AWS D1.5-2002 Section 6.19.5 0° UT OK.

WELD IDENTIFICATION 焊缝部件编号	INDICATION NO. 指示号	PROBE ANGLE 探测角度	FROM FACE 检测面	LEG (次数)	DECIBELS分贝 Indication Level a	Reference Level b	Attenuation Factor c	Indication Rating d	DISCONTINUITY 不连续性 LOCATION OF DISCONTINUITY 不连续位置(mm) Length 长度	Sound Path 声程	Depth from Surface 距表面深度	From'X 距X	From'Y 距Y	Discontinuity Evaluation 缺陷估计	Remark 备注
SA159		70				35								ACC.	100%
		45				33								ACC.	100%
		0				20								ACC.	100%
P326,P329,P327,P39		70				35								ACC.	100%
		45				33								ACC.	100%
		0				20								ACC.	100%
P786		70				35								ACC.	100%
		45				33								ACC.	100%

EXAMINED BY主探 Xu Rongqiang LEVEL - II SIGN / DATE 09.08.25	REVIEWED BY 审核 Tong Xingshan LEVEL - II SIGN / DATE 09.08.25
质量经理 / QCM Liu Yunhua 8/25/09 签字 SIGN / 日期 DATE	用户CUSTOMER 签字 SIGN / 日期 DATE

(FORM# ZPQC-UT01)

REPORT OF ULTRASONIC EXAMINATION
UT探伤报告

REPORT NO. 报告编号 T787-UT-2166 DATE 2009.08.25 PAGE 2 OF 2 Revision No: 0

WELD IDENTIFICATION 焊缝部件编号	INDICATION NO. 指示号	PROBE ANGLE 探测角度	FROM FACE 检测面	LEG（次数）	DECIBELS分贝				DISCONTINUITY 不连续性					Discontinuity Evaluation 缺陷估计	Remark 备注
					Indication Level	Reference Level	Attenuation Factor	Indication Rating	LOCATION OF DISCONTINUITY 不连续位置(mm)						
					a	b	c	d	Length 长度	Sound Path 声程	Depth from Surface 距表面深度	From'X 距X	From'Y 距Y		
		0				20								ACC.	100%
AFTER T-WR336, 389, 390, 391, 346															
BLANK															

EXAMINED BY主探
Xu Rong gang
LEVEL - II SIGN / DATE 09.08.25

REVIEWED BY 审核
Tang Xing shan
LEVEL - II SIGN / DATE 09.08.25

质量经理 / QCM
Lu Jianzhong 8/25/09
签字 SIGN / 日期 DATE

用户CUSTOMER
签字 SIGN / 日期 DATE

(FORM# ZPQC-UT01)

DEPARTMENT OF TRANSPORTATION
DIVISION OF ENGINEERING SERVICES
Office of Structural Materials
Quality Assurance and Source Inspection

Bay Area Branch
690 Walnut Ave.St. 150
Vallejo, CA 94592-1133
(707) 649-5453
(707) 649-5493

Contract #: 04-0120F4
Cty: SF/ALA Rte: 80 PM: 13.2/13.9
File #: xx.25A

QUALITY ASSURANCE -- NON-CONFORMANCE RESOLUTION

Location: Changxing Island, Shanghai, PRC **Report No:** NCS-000309
Prime Contractor: American Bridge/Fluor Enterprises, a JV **Date:** 08-Oct-2009
Submitting Contractor: Zhenhua Port Machinery Company, Ltd (ZPMC), Changxing Island **NCR #:** ZPMC-0190

Type of problem:

Welding	☑	**Concrete**	☐	**Other**	☐	
Welding	☑	**Curing**	☐	**Procedural**	☐	**Bridge No:** 34-0006
Joint fit-up	☐	**Coating**	☐	**Other**	☐	**Component:**
Procedural	☐	**Procedural**	☐	**Descripton:**		

Date the Non-Conformance Report was written: 18-Nov-2008

Description of Non-Conformance:
ZPMC has built up the base metal at the ends of the stiffeners and the skin plates on both East and South shafts in excess of 20mm. Weld build up "greater than twice the thickness of the thinner part or 20 mm [3/4 in.], whichever is less" must be approved by the Engineer. This condition exists on all base-end skin plates and stiffeners on Lift 1, East & South Shafts.

Contractor's proposal to correct the problem:
Perform harness testing, 100% UT and 100% MT on the weld build-up.

Corrective action taken:
Hardness testing was performed on both East & South Shaft weld build up, indicating acceptable results. 100% UT and MT NDT results were submitted, indicating that the weld build up is sound, and the welds were subsequently verified by QA.

Did corrective action require Engineer's approval? ☐ **Yes** ☑ **No**
If so, name of Engineer providing approval: **Date:**
Is Engineer's approval attached? ☐ **Yes** ☑ **No**

Comments:
This report is for the purpose of determining conformance with the contract documents and is not for the purpose of making repair or fit for purpose recommendations. Should you require recommendations concerning repairs or remedial efforts please contact Serge Sinevod, 134-8257-0045, who represents the Office of Structural Materials for your project.

Inspected By:	Sinevod,Serge	Quality Assurance Inspector
Reviewed By:	Wahbeh,Mazen	QA Reviewer