DEPARTMENT OF TRANSPORTATION
DIVISION OF ENGINEERING SERVICES
MATERIALS ENGINEERING AND TESTING SERVICES
Office of Structural Materials
Quality Assurance and Source Inspection
Bay Area Branch
690 Walnut Ave., St. 150
Vallejo, CA 94592-1133
(707) 649-5453
FAX: (707) 649-5493

Contract # : 04-0120E4
Cty SF Rte 80 PM 13.4/13.8
File # 45 .25 B

QUALITY ASSURANCE - NONCONFORMANCE REPORT

Location: Kiewit Offshore Services (KOS)

Date: February 23, 2006

Prime Contractor: Kiewit/FCI/Manson (KFM) – Joint Venture

NCR #053

Submitting Contractor: KOS

Type of problem:

Welding	☐	**Concrete**	☐	**Other**	☒	**Distortion Control Method**
Welding:	☐	**Curing:**	☐	**Procedural:**	☐	**Bridge No.:** 34-0006L/R
Joint fit-up:	☐	**Coating:**	☐	**Other:**	☐	**Component:** T-1 Footing/Bottom Plate Assembly joining piece #'s P37B & P38B
Procedural:	☐	**Procedural:**	☐			

Description of Non-Conformance: KOS is using large concrete blocks of an unknown weight in an attempt to control distortion. This distortion control method has not been approved and is not included within KOS's distortion control plan. Following is a digital photograph illustrating the concrete blocks used by KOS and a digital photograph illustrating the maximum amount of distortion measured by QA.

Hardcopy Routing Instructions:
1. Resident Engineer *2. Inspecting Branch Contract File* *3. Responsible Branch Contract File (with supporting documentation)*

QUALITY ASSURANCE - NONCONFORMANCE REPORT

(Continued, Page 2 of 2)

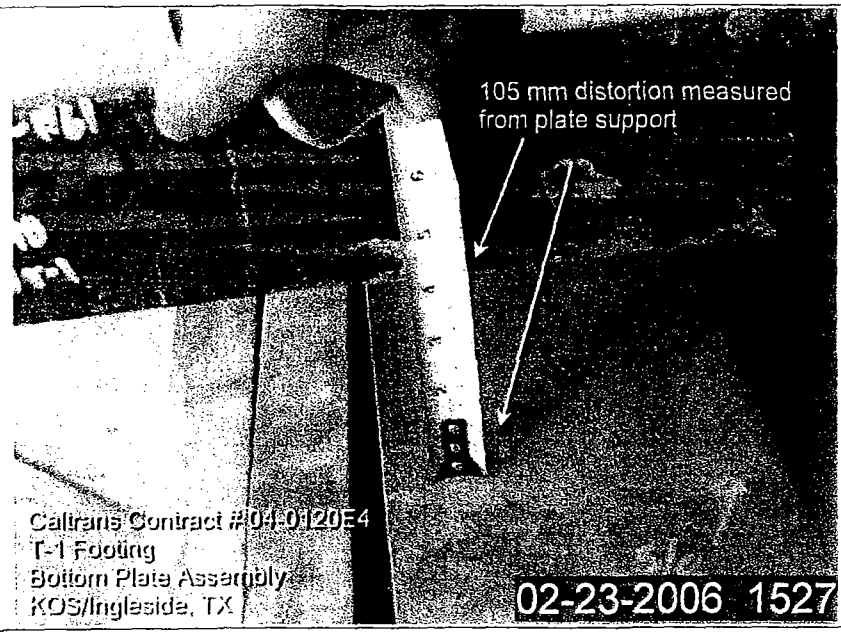

Applicable reference: Special Provisions Section 10-1.31 and AWS D1.5 (2002) section 3.4.3

Who discovered the problem: Caltrans QA Inspector's Mike Hasler & Mary Madere

Name of individual from Contractor notified: George Barnhill, KOS Quality Control Representative (QC)

Time and method of notification: Verbal with George Barnhill on February 23, 2006 at approximately 1600 hours

Name of Caltrans Engineer notified:

Time and method of notification:

QC Inspector's Name: Eloy Gonzales

Was the QC Inspector aware of problem: Yes

Contractor's proposal to correct the problem: Unknown as of this time.

Comments: This report is for the purpose of determining general conformance with the contract documents and is not for the purpose of making repair or fit for purpose recommendations. Should you require recommendations concerning repairs or remedial efforts please contact Ryan Smith, (858) 232-6799, who represents the Office of Structural Materials for your project.

Inspected By: Mary Madere — Quality Assurance Inspector

Reviewed By: Mahlon Lindenmuth — Lead QA Inspector

Hardcopy Routing Instructions:

1. Resident Engineer *2. Inspecting Branch Contract File* *3. Responsible Branch Contract File (with supporting documentation)*

STATE OF CALIFORNIA—BUSINESS, TRANSPORTATION AND HOUSING AGENCY Arnold Schwarzenegger, Governor

DEPARTMENT OF TRANSPORTATION
DIVISION OF ENGINEERING SERVICES
MATERIALS ENGINEERING AND TESTING SERVICES
Office of Structural Materials
Quality Assurance and Source Inspection
Bay Area Branch
690 Walnut Ave., St. 150
Vallejo, CA 94592-1133
(707) 649-5453
FAX: (707) 649-5493

Contract # : 04-0120E4
Cty SF Rte 80 PM 13.8
File # 45.25A

QUALITY ASSURANCE - NONCONFORMANCE RESOLUTION

Location: Ingleside, Texas **Date:** September 8, 2006

Prime Contractor: Kiewit/FCI/Manson (KFM) – Joint Venture **NCR#53**

Submitting Contractor: Kiewit Offshore Services (KOS)

Type of problem:

Welding	☐	**Concrete**	☐	**Other**	☒ **Distortion Control Method**
Welding:	☐	**Curing:**	☐	**Procedural:**	☐
Joint fit-up:	☐	**Coating:**	☐	**Other:**	☐
Procedural:	☐	**Procedural:**	☐		

Bridge No. 34-0006L/R **Component** T1 Foundation Footing, Bottom plate assembly joining P37B/P38B

Date nonconformance report was written: February 23, 2006

Description of Non-Conformance: KOS is using large concrete blocks of an unknown weight in an attempt to control distortion. This distortion control method has not been approved and is not included within KOS's distortion control plan.

Contractor's proposal to correct the problem: KOS has submitted a Distortion Control Procedure, KFM Submittal 803-00 that was approved on July 11, 2006. KOS has written a letter asking to resolve the NCR based on the Distortion Control Procedure being approved.

Corrective action taken: None

Did corrective action require Engineer's approval? ☒ **Yes** ☐ **No**

If so, name of the Engineer providing approval: Rafael Bolon, per Caltrans State letter 05.003.01-001835 **Date:** 9-8-06

Is Engineer's approval attached: ☐ **Yes** ☒ **No**

Comments: This report is for the purpose of determining general conformance with the contract documents and is not for the purpose of making repair or fit for purpose recommendations. Should you require recommendations concerning repairs or remedial efforts please contact Ryan Smith, (858) 232-6799, who represents the Office of Structural Materials for your project.

Inspected By: Mary Madere Quality Assurance Inspector

Reviewed By: Robert Cuellar & Keith Hoffman QA Reviewer and Branch Senior

Hardcopy Routing Instructions:
1. Resident Engineer *2. Inspecting Branch Contract File* *3. Responsible Branch Contract File (with supporting documentation)*

DEPARTMENT OF TRANSPORTATION - District 4 Toll Bridge Program
333 Burma Rd.
Oakland, CA 94607
(510) 286-0538, (510) 286-0550 fax

Kiewit-FCI-Manson, JV
220 Burma Rd.
Oakland, CA 94607

Attn: Mr. Lee Zink
Project Director

September 8, 2006

Contract No. 04-0120E4
04-SF-80-13.4, 13.8
SAS T1 & E2 Foundations
SFOBB-ESSSP

Letter No. 05.003.01-001835

Subject: Response to Submittal No. 803, Revision No. 00 (KOS Response to NCR generated by State Letter 888)

Dear Lee,

The Department has reviewed Kiewit-FCI-Manson Submittal No. 803, Revision No. 00, dated August 18, 2006. This Submittal responded to the Department's Letter No. 888 dated March 8, 2006, and No. 1067 dated April 26, 2006, which notified KFM of Non-conformance Reports (NCR) at Kiewit Offshore Services (KOS) in Ingleside, Texas, on February 23, 2006 and March 3, 2006 respectively, for unapproved distortion control procedure. The Department hereby approves Submittal No. 803, Revision No. 00, pursuant to Section 8-3.01, "Welding," of the Special Provisions. The NCRs for KOS issued on March 8, 2006, and April 26, 2006 are considered to be resolved.

If you have any questions or need additional information, please contact Mark Vilcheck at (510) 286-0526.

Sincerely,

Rafael Bolon
District Representative

For: Pedro J. Sanchez
Resident Engineer

cc: P. Sanchez
M. Woods
R. Smith

file: 05.003.01, 09.006.03, 55.803

8.0 Restraint

8.1 Strongbacks - Longitudinal shrinkage in butt welded seams often results in bowing, especially when fabricating plate structures. Stiffeners (or strongbacks) in the form of flat plates or structural shapes, welded or tacked on the sides of the joint are effective in preventing bowing. Strongback location is important: they must be placed at a sufficient distance from the joint so they do not interfere with welding. Strongback use will be minimal on the T1 project. Distortion will always be addressed first with weld sequencing, and strongbacks will be used as a secondary measure. Below shows a diagram of using a stiffening angle as a strongback to keep the bottom stiffeners underneath the end plates in proper alignment. Temporary erection aids such as strong backs are to be used only if deemed necessary by the field supervision (superintendents and leadmen). Stiffening will typically be located as to not inhibit a welder's access, for example off the side of an assembly or plate. Also they maybe placed in a low or high position to allow a welder to freely pass underneath or above the temporary. If weld distortion occurs, the location of stiffening or strongbacks will be chosen based on the reaction the part has to the welding process. Additional information regarding temporaries or erection aids is given in the KOS T1 Footing Fabrication Plan.

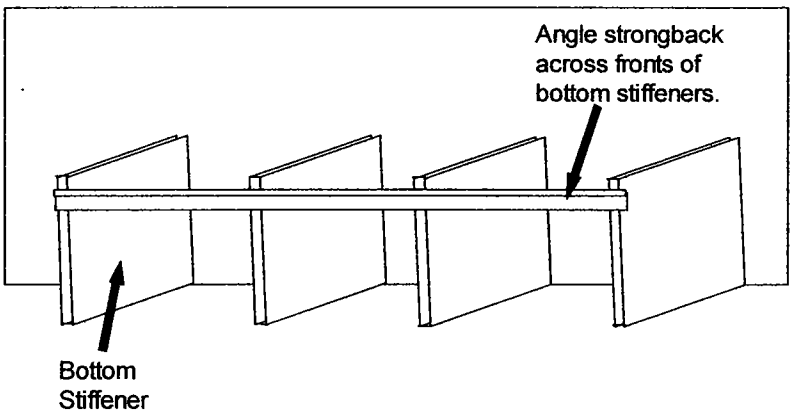

8.2 Clamping and Weights- A variation of stiffening of parts prior to weld for distortion control is the restraint method. This is the use of clamps to maintain the shape of an assembly during the welding process. Clamping may be used on the splicing of bottom plates if weld draw is detected during the monitoring of this assembly activity. When in a horizontal position, heavy weights may also be used on an assembly to hold down extremities instead of clamping. *KOS uses these weights on either side of a welded joint during the welding process as it allows some flexibility to the joint and an even distribution of restraint. Furthermore, KOS prefers using weights as clamping or clipping down of the plate can point load plate if the plate begins to distort. Typically in a vertical joint condition, restraint by clipping must be used as weights are not an option. The size of weights will be determined on a case by case basis dependent upon the weld joint and the size of plates being joined.*

State of California
DEPARTMENT OF TRANSPORTATION

Business, Transportation and Housing Agency

M e m o r a n d u m

Flex your power!
Be energy efficient!

To: MARK VILCHECK
Structure Representative
333 Burma Road
Oakland, CA 94607

Date: August 23, 2006

File: 04-0120E4
E2/T1 Foundations

From: RYAN T. SMITH
Structural Materials Representative
Quality Assurance and Source Inspection Branch
Office of Structural Materials

KFM SUBMITTAL 803-00 –KIEWIT OFFSHORE SERVICES (KOS) RESPONSE TO NONCONFORMANCE REPORTS 053 AND 060

The Office of Structural Materials (OSM) has reviewed the KFM Submittal 803-00, dated August 18, 2006. In this submittal the Contractor is requesting to close the Nonconformance Report (NCR) issued by State Letter 05.003.01-000888, in regards to KOS proceeding with the production welding of the T1 footing without an approved distortion control plan.

The Contractor's request to resolve Caltrans NCRs 53 and 60, generated by State Letters 888 and 1067 respectively is approved. The distortion control methods used by the Contractor were approved as part of the Contractor's Distortion Control Plan per State Letter 05.003.01-0001514, dated July 11, 2006. Office of Structural Materials considers these NCRs resolved at this time.

If you have any questions, or would like to discuss the issues, please call me at (858) 232-6799.

cc: Rafael Bolon
Tom Shimada
Patryk Pich
Robert Cuellar