DEPARTMENT OF TRANSPORTATION
DIVISION OF ENGINEERING SERVICES
Office of Structural Materials
Quality Assurance and Source Inspection

Bay Area Branch
690 Walnut Ave.St. 150
Vallejo, CA 94592-1133
(707) 649-5453
(707) 649-5493

Contract #: 04-0120F4
Cty: SF/ALA Rte: 80 PM: 13.2/13.9
File #: 69.25B

QUALITY ASSURANCE -- NON-CONFORMANCE REPORT

Location: Changxing Island, Shanghai, P.R. China **Report No:** NCR-000686
Prime Contractor: American Bridge/Fluor Enterprises, a JV **Date:** 22-Feb-2010
Submitting Contractor: Zhenhua Port Machinery Company, Ltd (ZPMC), Changxing Island **NCR #:** ZPMC-0653

Type of problem:

Welding	☐	**Concrete**	☐	**Other**	☑	
Welding	☐	**Curing**	☐	**Procedural**	☐	**Bridge No:** 34-0006
Joint fit-up	☐	**Coating**	☐	**Other**	☑	**Component:** Segment 5CE Side Panel
Procedural	☐	**Procedural**	☐	**Description:** Missed UT Indication by QC		

Reference Description: Missed UT indication by QC on Segment 5CE Side Panel

Description of Non-Conformance:

During the Quality Assurance (QA) NDT Ultrasonic Testing review of welds located on OGB Segment 5CE Corner Assembly to Side Plate weld, this QA Inspector discovered the following issues:

-One Class A Linear indication measuring approximately 20 mm long.
-The weld is identified as: Weld #SEG026A-009
-The indication dBs rating is +6.
-Material thickness is 16 mm.
-The depth of the indication is approximately 8 mm.
-The “Y” location is approximately 5570mm from weld no. OBE5A-006
-The indication is clearly marked on or near the weld.
-The Weld is a Complete Joint Penetration (CJP) Butt weld joining the Corner Assembly to Side Plate.
-The member is located in Trial Assembly.
-The Notice of Witness Inspection Number (NWIT) is 005220. The indication is located inside of the area that has been previously tested and accepted by ZPMC Quality Control (QC) personnel. As per the contract documents, ZPMC’s QC personnel are required to perform 100% ultrasonic testing inspection of this weld.

Applicable reference:

AWS D1.5-02 Section 6, Table 6.3 specifies a class A indication as having a rating of 10dBs and under for material thicknesses 8mm through 20mm.

Special Provisions Section 8.3: “Quality Control (QC) shall be the responsibility of the Contractor. As a minimum, the Contractor shall perform inspection and testing of each weld joint prior to welding, during welding, and after welding as specified in this section and to ensure that materials and workmanship conform to the requirements of the contract documents.”

Who discovered the problem: Timothy J. Murphy

QUALITY ASSURANCE -- NON-CONFORMANCE REPORT

(Continued Page 2 of 2)

Name of individual from Contractor notified: Peter Shaw
Time and method of notification: 15:15_2-22-10_Verbal
Name of Caltrans Engineer notified: Bill Howe
Time and method of notification: 14:00_2-22-10_Verbal
QC Inspector's Name: Wang Lu
Was QC Inspector aware of the problem: ☐ **Yes** ☑ **No**
Contractor's proposal to correct the problem:
N/A
Comments:
This report is for the purpose of determining conformance with the contract documents and is not for the purpose of making repair or fit for purpose recommendations. Should you require recommendations concerning repairs or remedial efforts please contact Mazen Wahbeh, +(86) 134.7247.7571, who represents the Office of Structural Materials for your project.

Inspected By:	Tsang,Eric	SMR
Reviewed By:	Wahbeh,Mazen	SMR

DEPARTMENT OF TRANSPORTATION - District 4 Toll Bridge
333 Burma Road
Oakland CA 94607
Tel: Fax:

NON-CONFORMANCE REPORT TRANSMITTAL

To:	AMERICAN BRIDGE/FLUOR, A JV 375 BURMA ROAD OAKLAND CA 95607	**Date:**	25-Feb-2010
		Contract No:	04-0120F4 04-SF-80-13.2 / 13.9
Dear:	Mr. Charles Kanapicki	**Job Name:**	SAS Superstructure
Attention:	Mr. Thomas Nilsson Project/Fabrication Manager	**Document No:**	05.03.06-000643
Subject:	NCR No. ZPMC-0653		

Reference Description: Missed UT indication by QC on Segment 5CE Side Panel

The attached Non-Conformance Report describes an occurrence where the contractor did not comply with a requirement of the contract document as indicated below:

- ☑ Material or Workmanship not in conformance with contract documents.
- ☑ Quality Control (QC) not performed in conformance with contract documents.
- ☐ Recurring QC issue that constitutes a systematic problem in quality control.
- ☐ Non-Conformance Resolved.

Material Location: OBG **Lift:** 05

Remarks:

During the Quality Assurance (QA) NDT Ultrasonic Testing review of welds located on OGB Segment 5CE Corner Assembly to Side Plate weld, this QA Inspector discovered the following issues:

-One Class A Linear indication measuring approximately 20 mm long.
-The weld is identified as: Weld #SEG026A-009
-The indication dBs rating is +6.
-Material thickness is 16 mm.
-The depth of the indication is approximately 8 mm.
-The “Y” location is approximately 5570mm from weld no. OBE5A-006
-The indication is clearly marked on or near the weld.
-The Weld is a Complete Joint Penetration (CJP) Butt weld joining the Corner Assembly to Side Plate.
-The member is located in Trial Assembly.
-The Notice of Witness Inspection Number (NWIT) is 005220. The indication is located inside of the area that has been previously tested and accepted by ZPMC Quality Control (QC) personnel. As per the contract documents, ZPMC’s QC personnel are required to perform 100% ultrasonic testing inspection of this weld.

Action Required and/or Action Taken:

Propose a resolution for the identified non-conformance with revised procedures to prevent future occurrences. Provide training or equipment as required for the ZPMC technician to assure that these indications are detected (by the technician) in the future. A response for the resolution of this issue is expected within 7 days.

Transmitted by: Bill Howe Sr. Transportation Engineer

Attachments: ZPMC-0653

cc: Rick Morrow, Gary Pursell, Peter Siegenthaler, Stanley Ku, Brian Boal, Jason Tom, Contract Files, Ching Chao

File: 05.03.06

AMERICAN BRIDGE/FLUOR ENTERPRISES, a JV

P.O. BOX 23223 Oakland, CA 94623

Phone (510) 419-0120 / Fax (510) 839-0666

NCR PROPOSED RESOLUTION

To: CALTRANS - SAS Superstructure
333 Burma Road
Oakland CA 94607

Attention: Pursell, Gary
Resident Engineer

Ref: 05.03.06-000643

Subject: NCR No. ZPMC-0653

Dated: **01-Mar-2010**

Contract No.: 04-0120F4
04-SF-80-13.2 / 13.9

Job Name: SAS Superstructure

Document No.: **ABF-NPR-000602 Rev: 00**

Contractor's Proposed Resolution:

Reference Resolution: This item has been closed on the punchlist and the attached documentation shows it is acceptable.

ZPMC has repaired the indication noted in the NCR and issued an internal NCR to make the production and QC team responsible aware of the non conformance. This item has been closed on the punchlist and the attached documentation shows it is acceptable. In addition, ZPMC inspectors have attended training both internally with ZPMC and ABFJV to reinforce the fundamentals. Based on this ZPMC requests closure of this NCR.

Submitted by: Ishibashi, Joshua

Attachment(s): ABF-NPR-000602R00;

Caltrans' comments:

Status: CLO

Date: 07-Mar-2010

The documentation received is sufficient to close this NCR.

Submitted by: Howe, Bill

Date: 07-Mar-2010

Attachment(s):

No. B-629

LETTER OF RESPONSE

TO: American Bridge/Flour
DATE: 2010-2-28
REGARDING: NCR-000686（ZPMC-0653）

With this letter of response, ZPMC requests closure of CT NCR-000686（ZPMC-0653）what mentioned that CT inspector discovered missed UT indication by QC.

Attached documentations show this missed indication has been fixed and accepted finally. Bases on that, ZPMC requests closure of this NCR.

ATTACHMENT:
NCR-000686（ZPMC-0653）
B-WR10701
B787-UT-11265 R1

2/28/10

DEPARTMENT OF TRANSPORTATION - District 4 Toll Bridge
333 Burma Road
Oakland CA 94607
Tel: Fax:

NON-CONFORMANCE REPORT TRANSMITTAL

To:	AMERICAN BRIDGE/FLUOR, A JV 375 BURMA ROAD OAKLAND CA 95607	**Date:**	25-Feb-2010
		Contract No:	04-0120F4 04-SF-80-13.2 / 13.9
Dear:	Mr. Charles Kanapicki	**Job Name:**	SAS Superstructure
Attention:	Mr. Thomas Nilsson Project/Fabrication Manager	**Document No:**	05.03.06-000643
Subject:	NCR No. ZPMC-0653		

Reference Description: Missed UT indication by QC on Segment 5CE Side Panel

The attached Non-Conformance Report describes an occurrence where the contractor did not comply with a requirement of the contract document as indicated below:

- ☑ Material or Workmanship not in conformance with contract documents.
- ☑ Quality Control (QC) not performed in conformance with contract documents.
- ☐ Recurring QC issue that constitutes a systematic problem in quality control.
- ☐ Non-Conformance Resolved.

Material Location: OBG **Lift:** 05

Remarks:

During the Quality Assurance (QA) NDT Ultrasonic Testing review of welds located on OGB Segment 5CE Corner Assembly to Side Plate weld, this QA Inspector discovered the following issues:

-One Class A Linear indication measuring approximately 20 mm long.
-The weld is identified as: Weld #SEG026A-009
-The indication dBs rating is +6.
-Material thickness is 16 mm.
-The depth of the indication is approximately 8 mm.
-The "Y" location is approximately 5570mm from weld no. OBE5A-006
-The indication is clearly marked on or near the weld.
-The Weld is a Complete Joint Penetration (CJP) Butt weld joining the Corner Assembly to Side Plate.
-The member is located in Trial Assembly.
-The Notice of Witness Inspection Number (NWIT) is 005220. The indication is located inside of the area that has been previously tested and accepted by ZPMC Quality Control (QC) personnel. As per the contract documents, ZPMC's QC personnel are required to perform 100% ultrasonic testing inspection of this weld.

Action Required and/or Action Taken:

Propose a resolution for the identified non-conformance with revised procedures to prevent future occurrences. Provide training or equipment as required for the ZPMC technician to assure that these indications are detected (by the technician) in the future. A response for the resolution of this issue is expected within 7 days.

Transmitted by: Bill Howe Sr. Transportation Engineer
Attachments: ZPMC-0653

cc: Rick Morrow, Gary Pursell, Peter Siegenthaler, Stanley Ku, Brian Boal, Jason Tom, Contract Files, Ching Chao

File: 05.03.06

DEPARTMENT OF TRANSPORTATION
DIVISION OF ENGINEERING SERVICES
Office of Structural Materials
Quality Assurance and Source Inspection

Bay Area Branch
690 Walnut Ave.St. 150
Vallejo, CA 94592-1133
(707) 649-5453
(707) 649-5493

Contract #: 04-01220F4
Cty: SF/ALA Rte: 80 PM: 13.2/13.9
File #: 69.25B

QUALITY ASSURANCE -- NON-CONFORMANCE REPORT

Location: Changxing Island, Shanghai, P.R. China **Report No:** NCR-000686
Prime Contractor: American Bridge/Fluor Enterprises, a JV **Date:** 22-Feb-2010
Submitting Contractor: Zhenhua Port Machinery Company, Ltd (ZPMC), Changxing Island **NCR #:** ZPMC-0653

Type of problem:

Welding	☐	**Concrete**	☐	**Other**	☑	
Welding	☐	**Curing**	☐	**Procedural**	☐	**Bridge No:** 34-0006
Joint fit-up	☐	**Coating**	☐	**Other**	☑	**Component:** Segment 5CE Side Panel
Procedural	☐	**Procedural**	☐	**Description:** Missed UT Indication by QC		

Reference Description: Missed UT indication by QC on Segment 5CE Side Panel

Description of Non-Conformance:

During the Quality Assurance (QA) NDT Ultrasonic Testing review of welds located on OGB Segment 5CE Corner Assembly to Side Plate weld, this QA Inspector discovered the following issues:

-One Class A Linear indication measuring approximately 20 mm long.
-The weld is identified as: Weld #SEG026A-009
-The indication dBs rating is +6.
-Material thickness is 16 mm.
-The depth of the indication is approximately 8 mm.
-The "Y" location is approximately 5570mm from weld no. OBE5A-006
-The indication is clearly marked on or near the weld.
-The Weld is a Complete Joint Penetration (CJP) Butt weld joining the Corner Assembly to Side Plate.
-The member is located in Trial Assembly.
-The Notice of Witness Inspection Number (NWIT) is 005220. The indication is located inside of the area that has been previously tested and accepted by ZPMC Quality Control (QC) personnel. As per the contract documents, ZPMC's QC personnel are required to perform 100% ultrasonic testing inspection of this weld.

Applicable reference:

AWS D1.5-02 Section 6, Table 6.3 specifies a class A indication as having a rating of 10dBs and under for material thicknesses 8mm through 20mm.

Special Provisions Section 8.3: "Quality Control (QC) shall be the responsibility of the Contractor. As a minimum, the Contractor shall perform inspection and testing of each weld joint prior to welding, during welding, and after welding as specified in this section and to ensure that materials and workmanship conform to the requirements of the contract documents."

Who discovered the problem: Timothy J. Murphy

QUALITY ASSURANCE -- NON-CONFORMANCE REPORT

(Continued Page 2 of 2)

Name of individual from Contractor notified: Peter Shaw
Time and method of notification: 15:15_2-22-10_Verbal
Name of Caltrans Engineer notified: Bill Howe
Time and method of notification: 14:00_2-22-10_Verbal
QC Inspector's Name: Wang Lu
Was QC Inspector aware of the problem: ☐ **Yes** ☑ **No**
Contractor's proposal to correct the problem:
N/A
Comments:
This report is for the purpose of determining conformance with the contract documents and is not for the purpose of making repair or fit for purpose recommendations. Should you require recommendations concerning repairs or remedial efforts please contact Mazen Wahbeh, +(86) 134.7247.7571, who represents the Office of Structural Materials for your project.

Inspected By:	Tsang,Eric	SMR
Reviewed By:	Wahbeh,Mazen	SMR

焊缝返修报告
Welding Repair Report

项目名称 Project Name	美国海湾大桥 SFOBB	部件图号 Drawing No	5AE/5BE/5CE	报告编号 Report No.	版本 Rev. No. 0
合同号 Contract No.:	04-0120F4	部件名称 Items Name	CORNER ASSEMBLY BOTTOM PLATE AND BOX SIDE PLATE	NDT报告编号 Report No.of NDT	B-WR10701
项目编号 Project No.:	ZP06-787				B787-UT-11265

焊缝缺陷描述：

Description of welding discontinuity:

Rejected indication found by ultrasonic inspection is less than the maximum allowance aggregate length.

(UT探伤发现的缺陷总长度小于最大允许长度。) SEG026A-009

检验员（Inspector）：Tang Xingshan 日期(Date)：2010.02.23

焊缝返修位置示意图：

Draft of welding discontinuity:

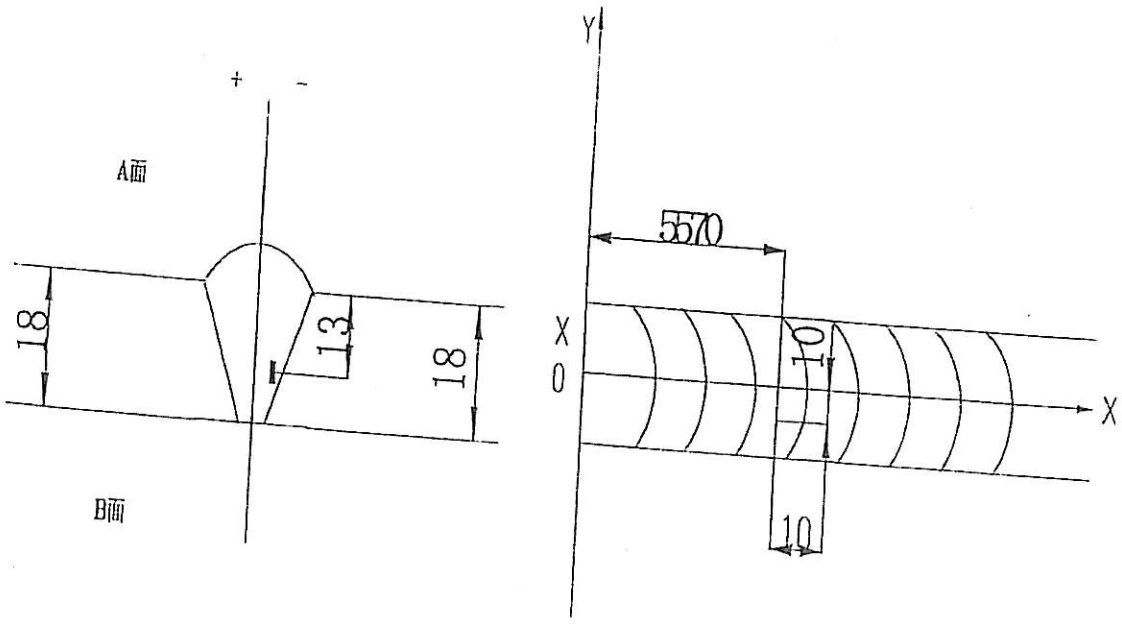

WELD NUMBER: SEG026A-009

产生原因:

Caused:

1、焊道未及时处理干净。

1. Did not clear the weld pass completely in time.

车间负责人(Foreman): Gao Jun 日期(Date): 2.24

处理意见

Disposition :

1. 从缺陷距离端面较近一侧（D≤0.65T, D为缺陷深度，T为板厚）采用碳刨或打磨的方法去除焊缝缺陷;
2. 参照返修焊接工艺规程（WPS）准备正确的接头型式，预热和焊接;
3. 焊前对修补区域进行VT检测保证缺陷完全被清除;
4. 将修补区域打磨到与母材或邻近焊缝平齐;
5. 对焊缝进行UT检测，检测范围为返修区域以及其两端各延长50mm。

1. Gouge or grind from nearer side from metal edge （D≤0.65T, "D" is depth of defects, "T" is thickness of metal） to remove all defects;
2. Follow repair WPS for joint preparation, preheat, and weld deposit;
3. Verify with VT no defects remain in the weld joint prior to welding;
4. Grind the repaired area flush with base metal or the adjacent weld;
5. Perform UT inspection to the weld along with 50mm on each end of the repair area;

工 艺: Hexiaolin 2.24
Technical engineer

审核:
Approved by

日期
Date

焊缝返修报告
Welding Repair Report

ZPMC					版本 Rev. No. 0
项目名称 Project Name	美国海湾大桥 SFOBB	部件图号 Drawing No	5AE/5BE/5CE	报告编号 Report No.	B-WR10701
合同号 Contract No.:	04-0120F4	部件名称 Items Name	CORNER ASSEMBLY BOTTOM PLATE AND BOX SIDE PLATE	NDT报告编号 Report No.of NDT	B787-UT-11265
项目编号 Project No.:	ZP06-787				

纠正措施:

Correction action to prevent re occurrence:

1.加强焊接监控和道间清理。

1. Improve monitoring of welding and interpass cleaning.

车间负责人(Foreman): 日期(Date): 2.24

参照的WPS编号 Repair WPS No.	WPS-345-SMAW-2 G(2F)-Repair WPS-345-FCAW-2 G(2F)-Repair-1 WPS-345-SMAW-4 G(4F)-Repair	工艺员 technologist	2.24
返修（碳刨）前预热温度 Preheat temperature before gouging	N/A	返修的缺陷 Description of discontinuity	I.F
焊前处理检查 Inspection before welding	Acc	焊前预热温度 Preheat temperature before welding	98°C
最大碳刨深度 Max. depth of gouging	7mm	碳刨总长 Total length of gouging	122mm

焊工 welder 044779	焊接类型 welding type SMAW	焊接位置 position 4G
焊接电流 Current 153	焊接电压 Voltage 23.5	焊接速度 Speed 101

返修后检查 **Inspection After repairing:**

外观检查 VT result Acc	检验员 Inspector 057070	日期 Date 2010.2.24
NDT复检 NDT result ACC	探伤员 NDT person	日期 Date 2010.02.26
见证： Witness/Review:		
备注： Remark：		

ZPMC

REPORT OF ULTRASONIC EXAMINATION
UT探伤报告

REPORT NO. 报告编号 B787-UT-11265 DATE 2010.02.23 PAGE 1 OF 1 Revision No: 0

PROJECT NO. :工程编号 ZP06-787

ITEMS NAME: 部件名称 CORNER ASSEMBLY BOTTOM PLATE AND BOX SIDE PLATE	DRAWING NO.: 图号 5AE/5BE/5CE	CONTRACTOR : CALTRANS CALTRANS CONTRACT NO.: 04-0120F4 加州工程编号
REFERENCING CODE 参考规范 AWS D1.5-2002	ACCEPTANCE STANDARD接受标准 AWS D1.5-2002(Table 6.3)	PROCEDURE NO. 程序编号 ZPQC-UT-01
WELDING PROCESS 焊接方法 SAW	JOINT TYPE 焊缝类型 BUTT	CALIBRATION DUE DATE 仪器校正有效期 Dec. 28ST ,2010

EQUIPMENT 设备 UT SCOPE	MANUFACTURER 制造商 PANAMETRICS	MODEL NO. 样式编号 EPOCH-4B	SERIAL NO. 序列编号 071565311, 061488510, 061495811, 070152011,
CALIBRATION BLOCK 试块 AWS IIW BLOCK TYPE Ⅱ	COUPLANT 耦合剂 C.M.C	MATERIAL/THICKNESS 材料厚度 A709M-345T2/F2-X 18/16mm	

TRANSDUCER 探头

MANUFACTURER 制造商	ANGLE 角度	FREQUENCY 频率	SIZE 尺寸	MANUFACTURER 制造商	ANGLE 角度	FREQUENCY 频率	SIZE 尺寸
Changchao	70°	2.5MHz	18×18mm				
Changchao	0°	2.5MHz	20mm	Reference Level 参考灵敏度		20dB	

Base metal inspected per AWS D1.5-2002 Section 6.19.5 0° UT OK.

WELD IDENTIFICATION 焊缝部件编号	INDICATION NO. 指示号	PROBE ANGLE 探测角度	FROM FACE 检测面	LEG（次数）	DECIBELS分贝 Indication Level a	Reference Level b	Attenuation Factor c	Indication Rating d	DISCONTINUITY 不连续性 LOCATION OF DISCONTINUITY 不连续位置(mm) Length 长度	Sound Path 声程	Depth from Surface 距表面深度	From'X 距X	From'Y 距Y	Discontinuity Evaluation 缺陷估计	Remark 备注
SEG022A-001		70				32								ACC.	100%
SEG022A-010		70				32								ACC.	100%
SEG024A-031		70				32								ACC.	100%
SEG026A-009	1	70	A	1	43	32	3	+8	10	63	13	-10	5570	REJ.	100%
SEG026A-010		70				32								ACC.	100%

AFTER HSR(B)-352, 345, 351, 353, HSR1(B)-8145, 8146

BLANK

EXAMINED BY主探
Leung Xingshan 2010.02.23
LEVEL - II SIGN / DATE

REVIEWED BY 审核
[signature] 2010.02.23
LEVEL - II SIGN / DATE

质量经理 / QCM

签字 SIGN / 日期 DATE

用户CUSTOMER

签字 SIGN / 日期 DATE

(FORM# ZPQC-UT01)

REPORT OF ULTRASONIC EXAMINATION
UT探伤报告

REPORT NO. 报告编号 B787-UT-11265R1	DATE 2010.02.26	PAGE 1 OF 1	Revision No: 0

PROJECT NO. :工程编号 ZP06-787		CONTRACTOR : CALTRANS
ITEMS NAME: 部件名称 CORNER ASSEMBLY BOTTOM PLATE AND BOX SIDE PLATE	DRAWING NO.: 图号 5AE/5BE/5CE	CALTRANS CONTRACT NO.: 04-0120F4 加州工程编号

REFERENCING CODE 参考规范	ACCEPTANCE STANDARD 接受标准	PROCEDURE NO. 程序编号
AWS D1.5-2002	AWS D1.5-2002(Table 6.3)	ZPQC-UT-01
WELDING PROCESS 焊接方法	JOINT TYPE 焊缝类型	CALIBRATION DUE DATE 仪器校正有效期
SMAW	BUTT	Dec. 28ST ,2010

EQUIPMENT 设备	MANUFACTURER 制造商	MODEL NO. 样式编号	SERIAL NO. 序列编号
UT SCOPE	PANAMETRICS	EPOCH-4B	071565311, 061488510, 061495811, 070152011,
CALIBRATION BLOCK 试块	COUPLANT 耦合剂	MATERIAL/THICKNESS 材料厚度	
AWS IIW BLOCK TYPE II	C.M.C	A709M-345T2/F2-X	18/16mm

TRANSDUCER 探头

MANUFACTURER 制造商	ANGLE 角度	FREQUENCY 频率	SIZE 尺寸	MANUFACTURER 制造商	ANGLE 角度	FREQUENCY 频率	SIZE 尺寸
Changchao	70°	2.5MHz	18×18mm				
Changchao	0°	2.5MHz	20mm	Reference Level 参考灵敏度		20dB	

Base metal inspected per AWS D1.5-2002 Section 6.19.5 0° UT OK.

WELD IDENTIFICATION 焊缝部件编号	INDICATION NO. 指示号	PROBE ANGLE 探测角度	FROM FACE 检测面	LEG (次数)	DECIBELS分贝				DISCONTINUITY 不连续性					Discontinuity Evaluation 缺陷估计	Remark 备注
					Indication Level	Reference Level	Attenuation Factor	Indication Rating	LOCATION OF DISCONTINUITY 不连续位置(mm)						
					a	b	c	d	Length 长度	Sound Path 声程	Depth from Surface 距表面深度	From'X 距X	From'Y 距Y		
SEG026A-009	1R1	70				32								ACC.	100%
AFTER B-WR10701															
BLANK															

EXAMINED BY主探 Tang Hong Shen 10.02.26.
LEVEL - II SIGN / DATE

REVIEWED BY 审核 Bai Guang Sheng 10.02.26
LEVEL - II SIGN / DATE

质量经理 / QCM
签字 SIGN / 日期 DATE

用户CUSTOMER
签字 SIGN / 日期 DATE

(FORM# ZPQC-UT01)

REPORT OF ULTRASONIC EXAMINATION
UT探伤报告

REPORT NO. 报告编号 B787-UT-11265 DATE 2010.02.23 PAGE 1 OF 1 Revision No: 0

PROJECT NO. :工程编号 ZP06-787

ITEMS NAME: 部件名称	CORNER ASSEMBLY BOTTOM PLATE AND BOX SIDE PLATE	DRAWING NO.: 图号	5AE/5BE/5CE
CONTRACTOR : CALTRANS			
CALTRANS CONTRACT NO.: 04-0120F4 加州工程编号			
REFERENCING CODE 参考规范	AWS D1.5-2002	ACCEPTANCE STANDARD 接受标准	AWS D1.5-2002(Table 6.3)
PROCEDURE NO. 程序编号	ZPQC-UT-01		
WELDING PROCESS 焊接方法	SAW	JOINT TYPE 焊缝类型	BUTT
CALIBRATION DUE DATE 仪器校正有效期	Dec. 28ST ,2010		
EQUIPMENT 设备	UT SCOPE	MANUFACTURER 制造商	PANAMETRICS
MODEL NO. 样式编号	EPOCH-4B	SERIAL NO. 序列编号	071565311, 061488510, 061495811, 070152011,
CALIBRATION BLOCK 试块	AWS IIW BLOCK TYPE II	COUPLANT 耦合剂	C.M.C
MATERIAL/THICKNESS 材料厚度	A709M-345T2/F2-X	18/16mm	

TRANSDUCER 探头

MANUFACTURER 制造商	ANGLE 角度	FREQUENCY 频率	SIZE 尺寸	MANUFACTURER 制造商	ANGLE 角度	FREQUENCY 频率	SIZE 尺寸
Changchao	70°	2.5MHz	18×18mm				
Changchao	0°	2.5MHz	20mm				

Base metal inspected per AWS D1.5-2002 Section 6.19.5 0° UT OK. Reference Level 参考灵敏度 20dB

WELD IDENTIFICATION 焊缝部件编号	INDICATION NO. 指示号	PROBE ANGLE 探测角度	FROM FACE 检测面	LEG (次数)	DECIBELS分贝				DISCONTINUITY 不连续性					Discontinuity Evaluation 缺陷评估	Remark 备注
					Indication Level	Reference Level	Attenuation Factor	Indication Rating	LOCATION OF DISCONTINUITY 不连续位置(mm)						
					a	b	c	d	Length 长度	Sound Path 声程	Depth from Surface 距表面深度	From'X 距X	From'Y 距Y		
SEG022A-001		70				32								ACC.	100%
SEG022A-010		70				32								ACC.	100%
SEG024A-031		70				32								ACC.	100%
SEG026A-009	1	70	A	1	43	32	3	+8	10	63	13	-10	5570	REJ.	100%
SEG026A-010		70				32								ACC.	100%
AFTER HSR(B)-352, 345, 351, 353, HSR1(B)-8145, 8146															
BLANK															

EXAMINED BY主探 Leong Limyshan 2010.02.23

LEVEL - II SIGN / DATE

REVIEWED BY 审核 Koo Boonyam 2010.02.23

LEVEL - II SIGN / DATE

质量经理 / QCM

签字 SIGN / 日期 DATE

用户CUSTOMER

签字 SIGN / 日期 DATE

(FORM# ZPQC-UT01)

REPORT OF ULTRASONIC EXAMINATION
UT探伤报告

REPORT NO. 报告编号 B787-UT-11265R1	DATE 2010.02.26	PAGE 1 OF 1	Revision No: 0

PROJECT NO. 工程编号 ZP06-787		CONTRACTOR : CALTRANS
ITEMS NAME: 部件名称 CORNER ASSEMBLY BOTTOM PLATE AND BOX SIDE PLATE	DRAWING NO.: 图号 5AE/5BE/5CE	CALTRANS CONTRACT NO.: 04-0120F4 加州工程编号

REFERENCING CODE 参考规范	ACCEPTANCE STANDARD 接受标准	PROCEDURE NO. 程序编号
AWS D1.5-2002	AWS D1.5-2002(Table 6.3)	ZPQC-UT-01
WELDING PROCESS 焊接方法	JOINT TYPE 焊缝类型	CALIBRATION DUE DATE 仪器校正有效期
SMAW	BUTT	Dec. 28ST ,2010

EQUIPMENT 设备	MANUFACTURER 制造商	MODEL NO. 样式编号	SERIAL NO. 序列编号
UT SCOPE	PANAMETRICS	EPOCH-4B	071565311, 061488510, 061495811, 070152011,

CALIBRATION BLOCK 试块	COUPLANT 耦合剂	MATERIAL/THICKNESS 材料厚度
AWS IIW BLOCK TYPE II	C.M.C	A709M-345T2/F2-X 18/16mm

TRANSDUCER 探头

MANUFACTURER 制造商	ANGLE 角度	FREQUENCY 频率	SIZE 尺寸	MANUFACTURER 制造商	ANGLE 角度	FREQUENCY 频率	SIZE 尺寸
Changchao	70°	2.5MHz	18×18mm				
Changchao	0°	2.5MHz	20mm	Reference Level 参考灵敏度		20dB	

Base metal inspected per AWS D1.5-2002 Section 6.19.5 0° UT OK.

WELD IDENTIFICATION 焊缝部件编号	INDICATION NO. 指示号	PROBE ANGLE 探测角度	FROM FACE 检测面	LEG (次数)	DECIBELS分贝				DISCONTINUITY 不连续性					Discontinuity Evaluation 缺陷估计	Remark 备注
					Indication Level	Reference Level	Attenuation Factor	Indication Rating	LOCATION OF DISCONTINUITY 不连续位置(mm)						
					a	b	c	d	Length 长度	Sound Path 声程	Depth from Surface 距表面深度	From'X 距X	From'Y 距Y		
SEG026A-009	1R1	70				32								ACC.	100%
AFTER B-WR10701															
BLANK															

EXAMINED BY主探
Jang Hong Chen 10.02.26
LEVEL - II SIGN / DATE

REVIEWED BY 审核
Jai Guang Hong 10.02.26
LEVEL - II SIGN / DATE

质量经理 / QCM
签字 SIGN / 日期 DATE

用户CUSTOMER
签字 SIGN / 日期 DATE

(FORM# ZPQC-UT01)

DEPARTMENT OF TRANSPORTATION
DIVISION OF ENGINEERING SERVICES
Office of Structural Materials
Quality Assurance and Source Inspection

Bay Area Branch
690 Walnut Ave.St. 150
Vallejo, CA 94592-1133
(707) 649-5453
(707) 649-5493

Contract #: 04-0120F4
Cty: SF/ALA Rte: 80 PM: 13.2/13.9
File #: xx.25A

QUALITY ASSURANCE -- NON-CONFORMANCE RESOLUTION

Location: Changxing Island, Shanghai, P.R. China **Report No:** NCS-000541
Prime Contractor: American Bridge/Fluor Enterprises, a JV **Date:** 10-Mar-2010
Submitting Contractor: Zhenhua Port Machinery Company, Ltd (ZPMC), Changxing Island **NCR #:** ZPMC-0653

Type of problem:

Welding	☐	**Concrete**	☐	**Other**	☑	
Welding	☐	**Curing**	☐	**Procedural**	☐	**Bridge No:** 34-0006
Joint fit-up	☐	**Coating**	☐	**Other**	☑	**Component:**
Procedural	☐	**Procedural**	☐	**Descripton:**		

Date the Non-Conformance Report was written: 22-Feb-2010

Description of Non-Conformance:

During the Quality Assurance (QA) NDT Ultrasonic Testing review of welds located on OGB Segment 5CE Corner Assembly to Side Plate weld, this QA Inspector discovered the following issues:

-One Class A Linear indication measuring approximately 20 mm long.
-The weld is identified as: Weld #SEG026A-009
-The indication dBs rating is +6.
-Material thickness is 16 mm.
-The depth of the indication is approximately 8 mm.
-The "Y" location is approximately 5570mm from weld no. OBE5A-006
-The indication is clearly marked on or near the weld.
-The Weld is a Complete Joint Penetration (CJP) Butt weld joining the Corner Assembly to Side Plate.
-The member is located in Trial Assembly.
-The Notice of Witness Inspection Number (NWIT) is 005220. The indication is located inside of the area that has been previously tested and accepted by ZPMC Quality Control (QC) personnel. As per the contract documents, ZPMC's QC personnel are required to perform 100% ultrasonic testing inspection of this weld.

Contractor's proposal to correct the problem:

Repair missed indication and perform required NDT to verify weld is in compliance with Contract specifications.

Corrective action taken:

Contractor submitted WRR along with required NDT documentation verifying the weld is in compliance with Contract specifications.

Did corrective action require Engineer's approval?

QUALITY ASSURANCE -- NON-CONFORMANCE RESOLUTION

(Continued Page 2 of 2)

☐ **Yes** ☑ **No**

If so, name of Engineer providing approval: **Date:**

Is Engineer's approval attached? ☐ **Yes** ☑ **No**

Comments:

This report is for the purpose of determining conformance with the contract documents and is not for the purpose of making repair or fit for purpose recommendations. Should you require recommendations concerning repairs or remedial efforts please contact Jim Simonis 152. 1675.3703, who represents the Office of Structural Materials for your project.

Inspected By:	Simonis,Jim	Quality Assurance Inspector
Reviewed By:	Wahbeh,Mazen	QA Reviewer