DEPARTMENT OF TRANSPORTATION
DIVISION OF ENGINEERING SERVICES
Office of Structural Materials
Quality Assurance and Source Inspection

Bay Area Branch
690 Walnut Ave.St. 150
Vallejo, CA 94592-1133
(707) 649-5453
(707) 649-5493

Contract #: 04-0120F4
Cty: SF/ALA Rte: 80 PM: 13.2/13.9
File #: 69.25B

QUALITY ASSURANCE -- NON-CONFORMANCE REPORT

Location: Changxing Island, Shanghai, P.R. China **Report No:** NCR-000581
Prime Contractor: American Bridge/Fluor Enterprises, a JV **Date:** 02-Jan-2010
Submitting Contractor: Zhenhua Port Machinery Company, Ltd (ZPMC), Changxing Island **NCR #:** ZPMC-0554

Type of problem:

Welding	☐	**Concrete**	☐	**Other**	☑	
Welding	☐	**Curing**	☐	**Procedural**	☐	**Bridge No:** 34-0006
Joint fit-up	☐	**Coating**	☐	**Other**	☑	**Component:** Segment 8CE Corner Assembly
Procedural	☐	**Procedural**	☐	**Description:** Missed MT transverse indication by QC		

Reference Description: Missed MT transverse indication by QC for Segment 8CE Corner Assembly

Description of Non-Conformance:

During the Quality Assurance Magnetic Particle Testing (MT) review of welds located on OBG Corner Assembly, this Quality Assurance Inspector (QA) discovered the following issue:
-One (1) Transverse linear indication that measured approximately 8mm in length.
-The weld is identified as CA051-010 at panel point (PP64.5 in Segment 8BE).
-The weld is a fillet weld joining the Vertical Longitudinal Truss (X74H) to the Side Plate (SP458A)
-The Side Panel plate is identified as: PL1353A.
-The OBG Corner Assembly is located in the outside repair yard, south side of the Bay14.
The Notice of Witness Inspection Number (NWIT) is 004978. The indication is located inside the area that has been previously tested and accepted by ZPMC Quality Control (QC) personnel. As per the contract documents, ZPMC's QC personnel are required to perform 100% Magnetic Particle inspection of this weld.

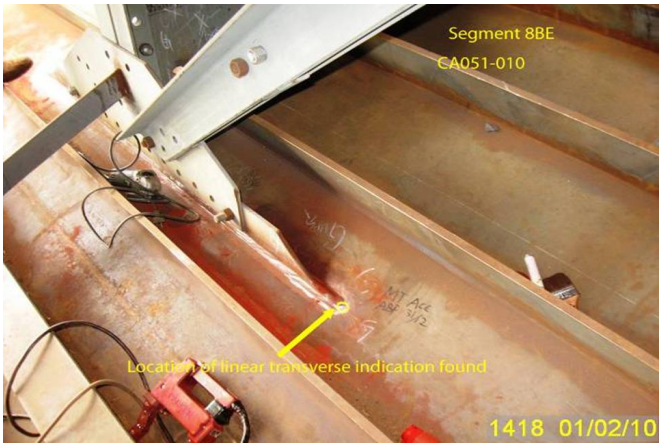

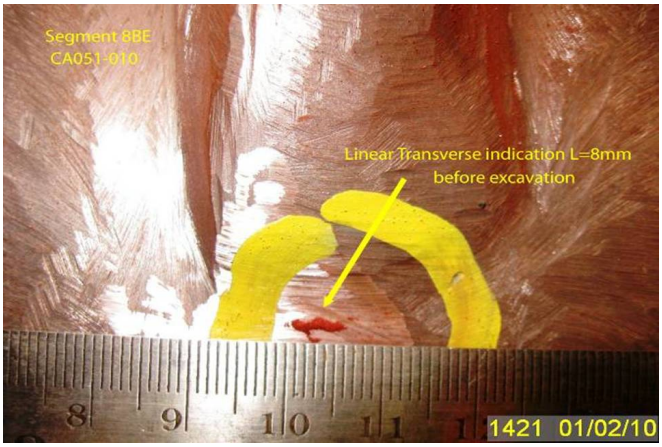

Applicable reference:

Special Provisions Section 8.3 – "Quality Control (QC) shall be the responsibility of the Contractor. As a minimum, the Contractor shall perform inspection and testing of each weld joint prior to welding, during

QUALITY ASSURANCE -- NON-CONFORMANCE REPORT

(Continued Page 2 of 2)

welding, and after welding as specified in this section and to ensure that materials and workmanship conform to the requirements of the contract documents."

AWS D1.5 (02) Section 6.26.2 – "Welds that are subject to MT in addition to visual inspection shall have no cracks.

Who discovered the problem: Chandra Sudalaimuthu

Name of individual from Contractor notified: Peter Shaw

Time and method of notification: 1430 hours, 01/02/10, Verbal

Name of Caltrans Engineer notified: Bill Howe

Time and method of notification: 2300 hours, 01/02/10, Email

QC Inspector's Name: Wang Xian Pin

Was QC Inspector aware of the problem: ☐ **Yes** ☑ **No**

Contractor's proposal to correct the problem:

N/A

Comments:

This report is for the purpose of determining conformance with the contract documents and is not for the purpose of making repair or fit for purpose recommendations. Should you require recommendations concerning repairs or remedial efforts please contact Mazen Wahbeh, (818) 292-0659, who represents the Office of Structural Materials for your project.

Inspected By:	Tsang,Eric	SMR
Reviewed By:	Wahbeh,Mazen	SMR

DEPARTMENT OF TRANSPORTATION - District 4 Toll Bridge
333 Burma Road
Oakland CA 94607
Tel: Fax:

NON-CONFORMANCE REPORT TRANSMITTAL

To:	AMERICAN BRIDGE/FLUOR, A JV 375 BURMA ROAD OAKLAND CA 95607	**Date:**	03-Jan-2010
		Contract No:	04-0120F4 04-SF-80-13.2 / 13.9
Dear:	Mr. Charles Kanapicki	**Job Name:**	SAS Superstructure
Attention:	Mr. Thomas Nilsson Project/Fabrication Manager	**Document No:**	05.03.06-000544
Subject:	NCR No. ZPMC-0554		

Reference Description: Missed MT transverse indication by QC for Segment 8CE Corner Assembly

The attached Non-Conformance Report describes an occurrence where the contractor did not comply with a requirement of the contract document as indicated below:

- ☑ Material or Workmanship not in conformance with contract documents.
- ☑ Quality Control (QC) not performed in conformance with contract documents.
- ☐ Recurring QC issue that constitutes a systematic problem in quality control.
- ☐ Non-Conformance Resolved.

Material Location: OBG **Lift:** 08

Remarks:

During the Quality Assurance Magnetic Particle Testing (MT) review of welds located on OBG Corner Assembly, this Quality Assurance Inspector (QA) discovered the following issue:

-One (1) Transverse linear indication that measured approximately 8mm in length.

-The weld is identified as CA051-010 at panel point (PP64.5 in Segment 8BE).

-The weld is a fillet weld joining the Vertical Longitudinal Truss (X74H) to the Side Plate (SP458A)

-The Side Panel plate is identified as: PL1353A.

-The OBG Corner Assembly is located in the outside repair yard, south side of the Bay14.

The Notice of Witness Inspection Number (NWIT) is 004978. The indication is located inside the area that has been previously tested and accepted by ZPMC Quality Control (QC) personnel. As per the contract documents, ZPMC's QC personnel are required to perform 100% Magnetic Particle inspection of this weld.

Action Required and/or Action Taken:

Propose a resolution for the identified non-conformance with revised procedures to prevent future occurrences. Provide training and equipment as required to the ZPMC MT technician in order to pick up these indications in the future. A response for the resolution of this issue is expected within 7 days.

Transmitted by: Bill Howe Sr. Transportation Engineer

Attachments: ZPMC-0554

cc: Rick Morrow, Gary Pursell, Peter Siegenthaler, Stanley Ku, Brian Boal, Jason Tom, Contract Files, Ching Chao

File: 05.03.06

AMERICAN BRIDGE/FLUOR ENTERPRISES, a JV

P.O. BOX 23223 Oakland, CA 94623

Phone (510) 419-0120 / Fax (510) 839-0666

NCR PROPOSED RESOLUTION

To: CALTRANS - SAS Superstructure
333 Burma Road
Oakland CA 94607

Attention: Pursell, Gary
Resident Engineer

Ref: 05.03.06-000544

Subject: NCR No. ZPMC-0554

Dated: **18-Jan-2010**

Contract No.: 04-0120F4
04-SF-80-13.2 / 13.9

Job Name: SAS Superstructure

Document No.: **ABF-NPR-000508 Rev: 00**

Contractor's Proposed Resolution:

Reference Resolution: As a means of preventing future occurrences, the ABF QCM has performed refresher MT training. See attached MT training agenda and attendance roster.

As it is necessary to respond to the NCR with a proposed plan of action, ABF is doing so without all of the repair documentation at this time. As a means of preventing future occurrences, the ABF QCM has performed refresher MT training. See attached MT training agenda and attendance roster. The ABF QCM has been discussing missed MT indications with the ZPMC QCM and related NDT supervisory personnel. The ZPMC level III is in the process of assessing personnel, techniques and equipment. Preliminary findings have resulted in ZPMC taking immediate action by performing 100% overchecks of the previously tested areas beginning the week of 18 January 09 as a means of preventing future NCR's for missed indications. ABF has purchased powder dispensers for all the ZPMC MT technicians as a means to help control the amount of powder applied during MT testing. ZPMC requests this NCR be placed in the Approved Action Pending status category until such time that all the repair documents have been assembled and submitted.

Submitted by: Lawton, Steve

Attachment(s): ABF-NPR-000508R00;

Caltrans' comments:

Status: AAP

Date: 25-Jan-2010

The preventative measures taken by the QCM and the proposed resolution for closing NCR submitted by the contractor are acceptable. The NCR will be closed upon completion of the repair and review of the repair documents by the Engineer when submitted by the contractor.

Submitted by: Chao, Ching

Date: 25-Jan-2010

Attachment(s):

Tool Box Training Agenda

Subject: MT Techniques

Reason for Training: Several CT NCR's of indications missed during ZPMC NDT inspection.

1. Safety

a. Safety Glasses
b. Gloves (if required)
c. Knee Pads
d. Electrical shock

2. Tools

a. Lighting
b. MT Powder. Red for ambient, Yellow for High Temperature.
c. Powder Bulb
d. Powder Blower
e. MT Yoke Adequate working condition
f. Pie Gage

3. Inspection Techniques

a. Lighting
b. Position of body (distance of eyes to the weld surface)
c. Application of Powder removal of Powder
d. Continuous method
e. Two directions
f. Both sides of weld
g. Clean and dry surface

ZPMC

教育培训纪录

培训编号：MT-22-Dec-09

培训内容：	MT Techniques
培训对像：	项目质检
授课人员：	Steve Lawton
培训类型：	内部培训
培训时间：	22-Dec-09 5:00 pm
计划培训地点：	zpmc QC office

人员签到：

姓名	部门	姓名	部门
苏内韦 Sunwei	钢桥	狄坤轮 Di Kunlun	钢桥
孙[illegible] SunGongchang	钢桥	蔡新鑫 CaiXinXin	钢桥
徐海 XuHai	钢桥	傅志强 FuZhiqiang	钢桥
卞源源 BianYuanYuan	钢桥	顾云武 GuYunwu	钢桥
许兵 XuBing	钢桥	金建廷 Jinjianting	钢桥MT
李振华 Lizhenhua	钢桥	常芳杰 ChangFangjie	钢桥
李帅阳 LiXiuYang	QA	袁俊 YuanJun	钢桥
王威 Wangwei	钢桥	刘章敏 LiuZhangmin	
施林 SiLin	钢桥MT	徐华祥 XuHuaxiang	钢桥
丁阿成 DingAchang	钢桥MT	周东运 ZhongDongYun	钢桥
贺佳佳 HeJiajia	钢桥	赵成功 ZhaoChenggong	钢桥
黄璟 Huangjin	钢桥	孙工丁 SunGongchang	钢桥
李黎明 LiLiming	钢桥	徐[illegible] XuHui	刘宏文武 LiuHongbin
李昌涛 Lichangtao			

AMERICAN BRIDGE/FLUOR ENTERPRISES, a JV
P.O. BOX 23223 Oakland, CA 94623
Phone (510) 419-0120 / Fax (510) 839-0666

NCR PROPOSED RESOLUTION

To: CALTRANS - SAS Superstructure
333 Burma Road
Oakland CA 94607

Attention: Pursell, Gary
Resident Engineer

Ref: 05.03.06-000544

Subject: NCR No. ZPMC-0554

Dated: **24-May-2010**

Contract No.: 04-0120F4
04-SF-80-13.2 / 13.9

Job Name: SAS Superstructure

Document No.: **ABF-NPR-000508 Rev: 01**

Contractor's Proposed Resolution:

Reference Resolution: ZPMC has repaired the missed indications and is providing the NDT records to show that the weld is acceptable. Based on this ZPMC requests closure of this NCR.

ZPMC has repaired the missed indications and is providing the NDT records to show that the weld is acceptable. Based on this ZPMC requests closure of this NCR.

Submitted by: Ishibashi, Joshua

Attachment(s): ABF-NPR-000508R01;

Caltrans' comments:

Status: CLO

Date: 30-May-2010

This proposed resolution is acceptable. The documentation received is sufficient and the Department concurs that Non-Conformance ZPMC-0554 is closed.

Submitted by: Eagen, Sean

Date: 30-May-2010

Attachment(s):

No. B-741

LETTER OF RESPONSE

TO: American Bridge/Flour
DATE: 2010-5-1
REGARDING: NCR-000547(ZPMC-0520), NCR-000581(ZPMC-0554)
NCR-000588(ZPMC-0561), NCR-000653 (ZPMC-0624)

NCR-000547(ZPMC-0520) & NCR-000581(ZPMC-0554)
ZPMC is providing the WRRs and NDT records show these missed indications have been repaired and retest to be acceptable. ZPMC is requesting closure of these NCRs.

NCR-000588(ZPMC-0561)
ZPMC is providing the NDT record shows these missed indications have been repaired and retest to be acceptable. Please be noticed the corrected weld IDs should be CSD5-PP67-025 & CSD5-PP67-051. For detail please look at B-CWR1035. ZPMC is requesting closure of this NCR.

NCR-000653 (ZPMC-0624)
ZPMC is providing the NDT record shows this missed indication has been repaired and retest to be acceptable. Please be noticed the corrected weld IDs should be CA051-008. For detail please look at B-CWR1036. ZPMC is requesting closure of this NCR.

ATTACHMENT:
NCR-000547(ZPMC-0520)
B-WR12122
B787-UT-12336 R1
NCR-000581(ZPMC-0554)
B-WR12123
B787-UT-12337 R1
NCR-000588(ZPMC-0561)
B787-MT-16598 R1
NCR-000653 (ZPMC-0624)
B787-MT-16620 R1

5/1/10

DEPARTMENT OF TRANSPORTATION - District 4 Toll Bridge
333 Burma Road
Oakland CA 94607
Tel: Fax:

NON-CONFORMANCE REPORT TRANSMITTAL

To: AMERICAN BRIDGE/FLUOR, A JV
375 BURMA ROAD
OAKLAND CA 95607

Date: 24-Dec-2009

Contract No: 04-0120F4
04-SF-80-13.2 / 13.9

Job Name: SAS Superstructure

Document No: 05.03.06-000508

Dear: Mr. Charles Kanapicki

Attention: Mr. Thomas Nilsson Project/Fabrication Manager

Subject: NCR No. ZPMC-0520

Reference Description: Missed UT Indication by QC, Segment 7CW

The attached Non-Conformance Report describes an occurrence where the contractor did not comply with a requirement of the contract document as indicated below:

- ☑ Material or Workmanship not in conformance with contract documents.
- ☑ Quality Control (QC) not performed in conformance with contract documents.
- ☐ Recurring QC issue that constitutes a systematic problem in quality control.
- ☐ Non-Conformance Resolved.

Material Location: OBG **Lift:** 7

Remarks:

During the Quality Assurance Ultrasonic Testing (UT) review of weld located on OBG Segment 7CW, this Quality Assurance Inspector (QA) discovered the following issue:

-A total of one (1) rejectable Class "A" indication measuring approximately 25mm in length.

-The Weld is a complete joint penetration (CJP) Butt Weld joining Side Plate SP99A to SP431A and is identified as SEG37A-001.
-The Segment is located in the repair yard north of the blast shop.
The Notice of Witness Inspection Number (NWIT) is 004866. The indication is located inside the area that has been previously tested and accepted by ZPMC Quality Control (QC) personnel. As per the contract documents, ZPMC's QC personnel are required to perform 100% (UT) inspection of this splice weld.

Action Required and/or Action Taken:

Submit a repair plan to the engineer for approval. A response for the resolution of this issue is expected within 7 days.

Transmitted by: Bill Howe
Attachments: ZPMC-0520

cc: Rick Morrow, Gary Pursell, Peter Siegenthaler, Stanley Ku, Brian Boal, Jason Tom, Contract Files, Ching Chao
File: 05.03.06

Zeon PDF Driver Trial
www.zeon.com.tw

STATE OF CALIFORNIA--BUSINESS,TRANSPORTACTION AND HOUSING AGENCY
Arnold Schwarzenegger, Governor

DEPARTMENT OF TRANSPORTATION
DIVISION OF ENGINEERING SERVICES
Office of Structural Materials
Quality Assurance and Source Inspection

Bay Area Branch
690 Walnut Ave.St. 150
Vallejo, CA 94592-1133
(707) 649-5453
(707) 649-5493

Contract #: 04-0120F4
Cty: SF/ALA Rte: 80 PM: 13.2/13.9
File #: 69.25B

QUALITY ASSURANCE -- NON-CONFORMANCE REPORT

Location: Changxing Island, Shanghai, P.R. China
Prime Contractor: American Bridge/Fluor Enterprises, a JV
Submitting Contractor: Zhenhua Port Machinery Company, Ltd (ZPMC), Changxing Island

Report No: NCR-000547
Date: 15-Dec-2009
NCR #: ZPMC-0520

Type of problem:

Welding	☐	**Concrete**	☐	**Other**	☑
Welding	☐	**Curing**	☐	**Procedural**	☑
Joint fit-up	☐	**Coating**	☐	**Other**	☐
Procedural	☐	**Procedural**	☐	**Description:**	

Bridge No: 34-0006
Component: OBG Segment 7CW

Reference Description: Missed UT Indication by QC, Segment 7CW

Description of Non-Conformance:

During the Quality Assurance Ultrasonic Testing (UT) review of weld located on OBG Segment 7CW, this Quality Assurance Inspector (QA) discovered the following issue:

-A total of one (1) rejectable Class "A" indication measuring approximately 25mm in length.

-The Weld is a complete joint penetration (CJP) Butt Weld joining Side Plate SP99A to SP431A and is identified as SEG37A-001.
-The Segment is located in the repair yard north of the blast shop.
The Notice of Witness Inspection Number (NWIT) is 004866. The indication is located inside the area that has been previously tested and accepted by ZPMC Quality Control (QC) personnel. As per the contract documents, ZPMC's QC personnel are required to perform 100% (UT) inspection of this splice weld.

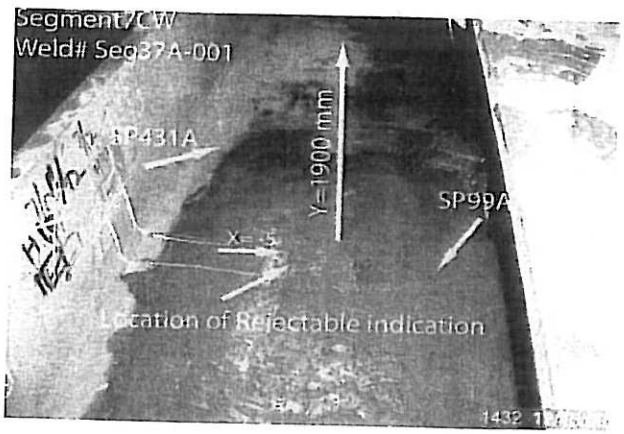

QUALITY ASSURANCE -- NON-CONFORMANCE REPORT

(Continued Page 2 of 2)

Applicable reference:

Special Provisions Section 8.3; "Quality Control (QC) shall be the responsibility of the Contractor. As a minimum, the Contractor shall perform inspection and testing of each weld joint prior to welding, during welding, and after welding as specified in this section and to ensure that materials and workmanship conform to the requirements of the contract documents."

AWS D1.5 Section 6.26.3.1; "Welds that are subject to UT in addition to visual inspection shall be acceptable if they meet the following requirements:...(1) Welds subject to tensile stress under any condition of loading shall conform to the requirements of Table 6.3...(2) Welds subject to compressive stress shall conform to the requirements of Table 6.4."

Who discovered the problem: Hiranch Patel
Name of individual from Contractor notified: Peter Shaw
Time and method of notification: 1700 hours, 12/15/09, Verbal
Name of Caltrans Engineer notified: Bill Howe
Time and method of notification: 1330 hours, 12/17/09, Verbal
QC Inspector's Name: Zhang Wei
Was QC Inspector aware of the problem: ☐ Yes ☑ No
Contractor's proposal to correct the problem:

Comments:

This report is for the purpose of determining conformance with the contract documents and is not for the purpose of making repair or fit for purpose recommendations. Should you require recommendations concerning repairs or remedial efforts please contact Eric Tsang, 15000422372, who represents the Office of Structural Materials for your project.

Inspected By:	Guest,Skyler	SMR
Reviewed By:	Wahbeh,Mazen	SMR

ZPMC	焊缝返修报告 Welding Repair Report			版本 Rev. No.
				0

项目名称 Project Name	美国海湾大桥 SFOBB	部件图号 Drawing No	SEG037A	报告编号 Report No.	B-WR12122
合同号 Contract No.:	04-0120F4	部件名称 Items Name	7CW BOTTOM AND SIDE PLATE SPLICE	NDT报告编号 Report No.of NDT	B787-UT-12336
项目编号 Project No.:	ZP06-787				

焊缝缺陷描述：

Description of welding discontinuity:

Rejected indication found by uitrasonic inspection is less than the maximum allowance aggregate length.

(UT探伤发现的缺陷总长度小于最大允许长度。) SEG037A-001

检验员（Inspector）Jin Feng 日期(Date)：2010.04.15

焊缝返修位置示意图：

Draft of welding discontinuity:

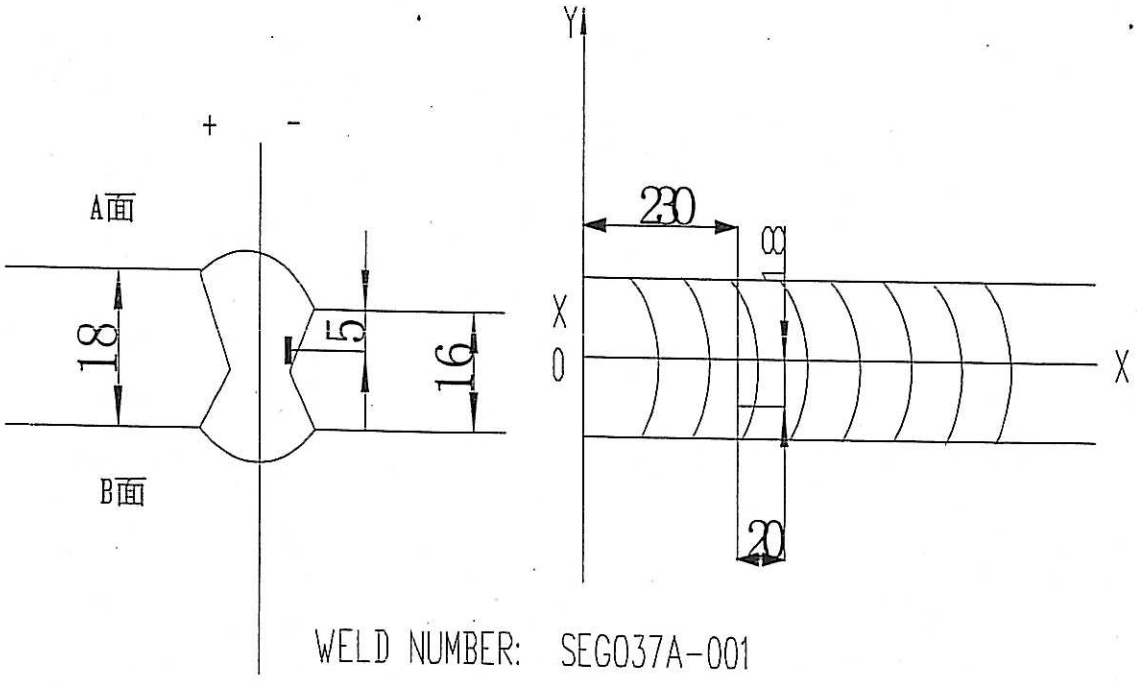

产生原因:

Caused:

1、焊道未及时处理干净。

1. Did not clear the weld pass completely in time.

车间负责人(Foreman):Li Zhigang 日期(Date):4.18

处理意见

Disposition：

1. 从缺陷距离端面较近一侧（D≤0.65T, D为缺陷深度，T为板厚）采用碳刨或打磨的方法去除焊缝缺陷;
2. 参照返修焊接工艺规程（WPS）准备正确的接头型式，预热和焊接;
3. 焊前对修补区域进行VT检测保证缺陷完全被清除;
4. 将修补区域打磨到与母材或邻近焊缝平齐;
5. 对焊缝进行UT检测，检测范围为返修区域以及其两端各延长50mm。

1. Gouge or grind from nearer side from metal edge （D≤0.65T, “D” is depth of defects, “T” is thickness of metal） to remove all defects;
2. Follow repair WPS for joint preparation, preheat, and weld deposit;
3. Verify with VT no defects remain in the weld joint prior to welding;
4. Grind the repaired area flush with base metal or the adjacent weld;
5. Perform UT inspection to the weld along with 50mm on each end of the repair area;

工 艺:Hexiaolin　　审核:　　日期 10.4.18

Technical engineer　　Approved by　　Date

焊缝返修报告
Welding Repair Report

				版本 Rev. No.	0
项目名称 Project Name	美国海湾大桥 SFOBB	部件图号 Drawing No	SEG037A	报告编号 Report No.	B-WR12122
合同号 Contract No.:	04-0120F4	部件名称 Items Name	7CW BOTTOM AND SIDE PLATE SPLICE	NDT报告编号 Report No.of NDT	B787-UT-12336
项目编号 Project No.:	ZP06-787				

纠正措施:

Correction action to prevent re occurrence:

1.加强焊接监控和道间清理。

1. Improve monitoring of welding and interpass cleaning.

车间负责人(Foreman): Li Zhigang 日期(Date): 4.18

参照的WPS编号 Repair WPS No.	WPS-345-SMAW-1 G(1F)-Repair WPS-345-FCAW-1 G(1F)-Repair-1 WPS-345-SMAW-4 G(4F)-Repair	工艺员 technologist	Mexico 4.18
返修（碳刨）前预热温度 Preheat temperature before gouging	85°C	返修的缺陷 Description of discontinuity	T-F
焊前处理检查 Inspection before welding	Acc	焊前预热温度 Preheat temperature before welding	126°C
最大碳刨深度 Max. depth of gouging	7mm	碳刨总长 Total length of gouging	120mm

焊工 welder 045133	焊接类型 welding type SMAW	焊接位置 position 1G
焊接电流 Current 168	焊接电压 Voltage 25.3	焊接速度 Speed 152

返修后检查
Inspection After repairing:

外观检查 VT result Acc	检验员 Inspector 07120701 G Yanhua	日 期 Date 2010.4.22
NDT复检 NDT result Acc	探伤员 NDT person	日 期 Date 10.4.27
见证： Witness/Review:		
备注： Remark：		

REPORT OF ULTRASONIC EXAMINATION
UT探伤报告

REPORT NO. 报告编号 B787-UT-12336	DATE 2010.04.15	PAGE 1 OF 1	Revision No: 0

PROJECT NO. :工程编号 ZP06-787			CONTRACTOR : CALTRANS
ITEMS NAME: 部件名称 7CW BOTTOM PLATE AND SIDE PLATE SPLICE	DRAWING NO.: 图号 SEG037A		CALTRANS CONTRACT NO.: 04-0120F4 加州工程编号
REFERENCING CODE 参考规范 AWS D1.5-2002	ACCEPTANCE STANDARD接受标准 AWS D1.5-2002(Table 6.3)	PROCEDURE NO. 程序编号 ZPQC-UT-01	
WELDING PROCESS 焊接方法 SMAW	JOINT TYPE 焊缝类型 BUTT	CALIBRATION DUE DATE仪器校正有效期 Dec. 28ST ,2010	
EQUIPMENT 设备 UT SCOPE	MANUFACTURER 制造商 PANAMETRICS	MODEL NO. 样式编号 EPOCH-4B	SERIAL NO. 序列编号 071565311, 061488510, 061495811, 070152011,
CALIBRATION BLOCK试块 AWS IIW BLOCK TYPE II	COUPLANT 耦合剂 C.M.C	MATERIAL/THICKNESS 材料厚度 A709M-345T2-X	16/18mm

TRANSDUCER 探头

MANUFACTURER 制造商	ANGLE 角度	FREQUENCY 频率	SIZE 尺寸	MANUFACTURER 制造商	ANGLE 角度	FREQUENCY 频率	SIZE 尺寸
Changchao	70°	2.5MHz	18×18mm				
Changchao	0°	2.5MHz	20mm	Reference Level 参考灵敏度		20dB	

Base metal inspected per AWS D1.5-2002 Section 6.19.5 0° UT OK.

WELD IDENTIFICATION 焊缝部件编号	INDICATION NO. 指示号	PROBE ANGLE 探测角度	FROM FACE 检测面	LEG (次数)	DECIBELS分贝				DISCONTINUITY 不连续性					Discontinuity Evaluation 缺陷估计	Remark 备注
					Indication Level	Reference Level	Attenuation Factor	Indication Rating	LOCATION OF DISCONTINUITY 不连续位置(mm)						
					a	b	c	d'	Length 长度	Sound Path 声程	Depth from Surface 距表面深度	From'X 距X	From'Y 距Y		
SEG037A-001	1	70	A	2	44	32	5	+7	20	86	5	-18	230	REJ.	100%
BLANK															

EXAMINED BY主探	REVIEWED BY 审核
Jinfeng 10.04.15	Hanfeng 10.04.15
LEVEL - II SIGN / DATE	LEVEL - II SIGN / DATE
质量经理 / QCM	用户CUSTOMER
签字 SIGN / 日期 DATE	签字 SIGN / 日期 DATE

(FORM# ZPQC-UT01)

REPORT OF ULTRASONIC EXAMINATION
UT探伤报告

REPORT NO. 报告编号	DATE	PAGE	Revision No:
B787-UT-12336R1	2010.04.27	1 OF 1	0

PROJECT NO. :工程编号	CONTRACTOR :
ZP06-787	CALTRANS

ITEMS NAME: 部件名称	DRAWING NO.: 图号	CALTRANS CONTRACT NO.: 加州工程编号
7CW BOTTOM PLATE AND SIDE PLATE SPLICE	SEG037A	04-0120F4

REFERENCING CODE 参考规范	ACCEPTANCE STANDARD 接受标准	PROCEDURE NO. 程序编号
AWS D1.5-2002	AWS D1.5-2002(Table 6.3)	ZPQC-UT-01

WELDING PROCESS 焊接方法	JOINT TYPE 焊缝类型	CALIBRATION DUE DATE 仪器校正有效期
SMAW	BUTT	Dec. 28ST ,2010

EQUIPMENT 设备	MANUFACTURER 制造商	MODEL NO. 样式编号	SERIAL NO. 序列编号
UT SCOPE	PANAMETRICS	EPOCH-4B	071565311, 061488510, 061495811, 070152011,

CALIBRATION BLOCK 试块	COUPLANT 耦合剂	MATERIAL/THICKNESS 材料厚度	
AWS IIW BLOCK TYPE II	C.M.C	A709M-345T2-X	16/18mm

TRANSDUCER 探头

MANUFACTURER 制造商	ANGLE 角度	FREQUENCY 频率	SIZE 尺寸	MANUFACTURER 制造商	ANGLE 角度	FREQUENCY 频率	SIZE 尺寸
Changchao	70°	2.5MHz	18×18mm				
Changchao	0°	2.5MHz	20mm	Reference Level 参考灵敏度		20dB	

Base metal inspected per AWS D1.5-2002 Section 6.19.5 0° UT OK.

WELD IDENTIFICATION 焊缝部件编号	INDICATION NO. 指示号	PROBE ANGLE 探测角度	FROM FACE 检测面	LEG (次数)	DECIBELS分贝				DISCONTINUITY 不连续性					Discontinuity Evaluation 缺陷估计	Remark 备注
					Indication Level	Reference Level	Attenuation Factor	Indication Rating	LOCATION OF DISCONTINUITY 不连续位置(mm)						
					a	b	c	d	Length 长度	Sound Path 声程	Depth from Surface 距表面深度	From"X 距X	From"Y 距Y		
SEG037A-001	1R1	70				32								ACC.	100%
AFTER B-WR12122															
BLANK															

EXAMINED BY主探	REVIEWED BY 审核
LEVEL - II SIGN / DATE 10.04.27	LEVEL - II SIGN / DATE 10.04.27
质量经理 / QCM	用户CUSTOMER
签字 SIGN / 日期 DATE	签字 SIGN / 日期 DATE

(FORM# ZPQC-UT01)

DEPARTMENT OF TRANSPORTATION - District 4 Toll Bridge
666 Feng Bin Road Room 708, Changxing Island
Shanghai 201913 PR China
Tel: 021-56856666 ext 207061 Fax:

NON-CONFORMANCE REPORT TRANSMITTAL

To:	AMERICAN BRIDGE/FLUOR, A JV 375 BURMA ROAD OAKLAND CA 95607	**Date:**	26-Jan-2010
		Contract No:	04-0120F4 04-SF-80-13.2 / 13.9
Dear:	Mr. Charles Kanapicki	**Job Name:**	SAS Superstructure
Attention:	Mr. Thomas Nilsson Project/Fabrication Manager	**Document No:**	05.03.06-000612
Subject:	NCR No. ZPMC-0624		

Reference Description: An UT indication (in 7EW FB to LD Weld) found by QA verification at the location where the contractor has tested and accepted

The attached Non-Conformance Report describes an occurrence where the contractor did not comply with a requirement of the contract document as indicated below:

- ☐ Material or Workmanship not in conformance with contract documents.
- ☐ Quality Control (QC) not performed in conformance with contract documents.
- ☑ Recurring QC issue that constitutes a systematic problem in quality control.
- ☐ Non-Conformance Resolved.

Material Location: OBG **Lift:** 07

Remarks:

During the Quality Assurance Ultrasonic Testing (UT) review of welds located on Orthotropic Box Girder (OBG) segment 7EW, this Quality Assurance Inspector (QA) discovered the following issues:

-One (1) longitudinal linear indication measuring approximately 25mm in length.

-The indication dBs rating is a +7.

-Material thickness is 14mm.

-The depth of the indication is approximately 5mm.

-The weld is identified as SEG041C-013 and located at Panel Point PP59 Cross Beam Side.

-The weld is designated as Non Seismic Performance Critical Material (Non SPCM).

-The indication is clearly marked on or near the weld.

-The Y distance for this indication is 230mm from top.

-The weld is a Complete Joint Penetration (CJP) "T" joint joining Longitudinal diaphragm plate (Non SPCM) to Floor Beam Plate X48B (Non SPCM).

-The Notice of Witness Inspection (NWIT) No. is 005120. The indication is located in an area previously tested and accepted by ZPMC Quality Control (QC) personnel. As per the contract documents, ZPMC's QC personnel are required to perform twenty five (25%) percent UT inspection of this weld.

Please see attached NCR ZPMC-624 for details.

Action Required and/or Action Taken:

Propose a resolution for the identified recurring non-conformance which constitutes a systematic problem on both materials/workmanship and quality control issues with revised procedures to remedy the defected work and to prevent future occurrences. A response for the resolution of this issue is expected within 14 days.

Transmitted by: Ching Chao

Attachments: ZPMC-0624

cc: Rick Morrow, Gary Pursell, Peter Siegenthaler, Stanley Ku, Brian Boal, Jason Tom, Contract Files, Ching Chao

File: 05.03.06

STATE OF CALIFORNIA--BUSINESS,TRANSPORTACTION AND HOUSING AGENCY Arnold Schwarzenegger, Governor

DEPARTMENT OF TRANSPORTATION
DIVISION OF ENGINEERING SERVICES
Office of Structural Materials
Quality Assurance and Source Inspection

Bay Area Branch
690 Walnut Ave.St. 150
Vallejo, CA 94592-1133
(707) 649-5453
(707) 649-5493

Contract #: 04-0120F4
Cty: SF/ALA Rte: 80 PM: 13.2/13.9
File #: 69.25B

QUALITY ASSURANCE -- NON-CONFORMANCE REPORT

Location: Changxing Island, Shanghai, P.R. China **Report No:** NCR-000653
Prime Contractor: American Bridge/Fluor Enterprises, a JV **Date:** 25-Jan-2010
Submitting Contractor: Zhenhua Port Machinery Company, Ltd (ZPMC), Changxing Island **NCR #:** ZPMC-0624

Type of problem:

Welding	☐	**Concrete**	☐	**Other**	☑	
Welding	☐	**Curing**	☐	**Procedural**	☐	**Bridge No:** 34-0006
Joint fit-up	☐	**Coating**	☐	**Other**	☑	**Component:** OBG Segment 7EW FB to LD Weld
Procedural	☐	**Procedural**	☐	**Description:** Missed UT Indication by QC		

Reference Description: An UT indication (in 7EW FB to LD Weld) found by QA verification at the location where the contractor has tested and accepted

Description of Non-Conformance:

During the Quality Assurance Ultrasonic Testing (UT) review of welds located on Orthotropic Box Girder (OBG) segment 7EW, this Quality Assurance Inspector (QA) discovered the following issues:

-One (1) longitudinal linear indication measuring approximately 25mm in length.
-The indication dBs rating is a +7.
-Material thickness is 14mm.
-The depth of the indication is approximately 5mm.
-The weld is identified as SEG041C-013 and located at Panel Point PP59 Cross Beam Side.
-The weld is designated as Non Seismic Performance Critical Material (Non SPCM).
-The indication is clearly marked on or near the weld.
-The Y distance for this indication is 230mm from top.
-The weld is a Complete Joint Penetration (CJP) "T" joint joining Longitudinal diaphragm plate (Non SPCM) to Floor Beam Plate X48B (Non SPCM).
-The Notice of Witness Inspection (NWIT) No. is 005120. The indication is located in an area previously tested and accepted by ZPMC Quality Control (QC) personnel. As per the contract documents, ZPMC's QC personnel are required to perform twenty five (25%) percent UT inspection of this weld.

Applicable reference:

-AWS D1.5-02 Section 6; Table 6.3 specifies a class A indication as having a rating of 10dBs and under for material thicknesses 8mm through 20mm.

-Special Provisions Section 8.3; "Quality Control (QC) shall be the responsibility of the Contractor. As a minimum, the Contractor shall perform inspection and testing of each weld joint prior to welding, during welding, and after welding as specified in this section and to ensure that materials and workmanship conform to the requirements of the contract documents."

QUALITY ASSURANCE -- NON-CONFORMANCE REPORT

(Continued Page 2 of 2)

Who discovered the problem: Subhasis Bera
Name of individual from Contractor notified: Peter Shaw
Time and method of notification: 1830 hours, 01-25-10, Email
Name of Caltrans Engineer notified: Bill Howe, Ching Chao
Time and method of notification: 1330 hours, 01-26-10, Verbal
QC Inspector's Name: Zhong Wei
Was QC Inspector aware of the problem: ☐ **Yes** ☑ **No**
Contractor's proposal to correct the problem:
N/A
Comments:
This report is for the purpose of determining conformance with the contract documents and is not for the purpose of making repair or fit for purpose recommendations. Should you require recommendations concerning repairs or remedial efforts please contact Mazen Wahbeh, +(86) 134.7247.7571, who represents the Office of Structural Materials for your project.

Inspected By:	Tsang,Eric	SMR
Reviewed By:	Wahbeh,Mazen	SMR

ZPMC	焊缝返修报告 Welding Repair Report				版本 Rev. No. 0
项目名称 Project Name	美国海湾大桥 SFOBB	部件图号 Drawing No	SEG041C	报告编号 Report No.	B-WR12123
合同号 Contract No.:	04-0120F4	部件名称 Items Name	7EW LONGITUDINAL DIAPHRAGM	NDT报告编号 Report No.of NDT	B787-UT-12337
项目编号 Project No.:	ZP06-787				

焊缝缺陷描述：

Description of welding discontinuity:

Rejected indication found by ultrasonic inspection is less than the maximum allowance aggregate length.

(UT探伤发现的缺陷总长度小于最大允许长度。) SEG041C-013

Jin Feng

检验员（Inspector）Jin Feng 日期(Date)：2010.04.15

焊缝返修位置示意图：

Draft of welding discontinuity:

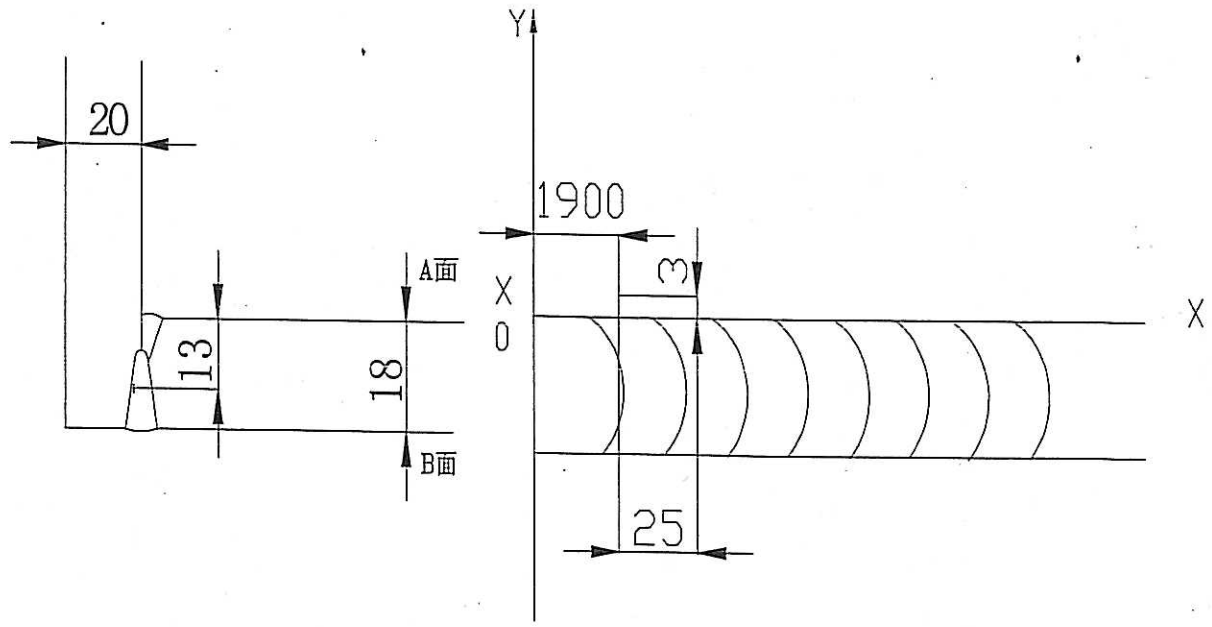

WELD NUMBER: SEG041C-013

产生原因:

Caused:

1、焊道未及时处理干净。

1. Did not clear the weld pass completely in time.

车间负责人(Foreman): Li Zhigang 日期(Date): 4.18

处理意见

Disposition :

1. 从缺陷距离端面较近一侧（D≤0.65T, D为缺陷深度，T为板厚）采用碳刨或打磨的方法去除焊缝缺陷;
2. 参照返修焊接工艺规程（WPS）准备正确的接头型式，预热和焊接;
3. 焊前对修补区域进行VT检测保证缺陷完全被清除;
4. 将修补区域打磨到与母材或邻近焊缝平齐;
5. 对焊缝进行UT检测，检测范围为返修区域以及其两端各延长50mm。

1. Gouge or grind from nearer side from metal edge （D≤0.65T, "D" is depth of defects, "T" is thickness of metal） to remove all defects;
2. Follow repair WPS for joint preparation, preheat, and weld deposit;
3. Verify with VT no defects remain in the weld joint prior to welding;
4. Grind the repaired area flush with base metal or the adjacent weld;
5. Perform UT inspection to the weld along with 50mm on each end of the repair area;

工 艺: Hexiaolin
Technical engineer

审核:
Approved by

日期 10.4.18
Date

焊缝返修报告
Welding Repair Report

版本 Rev. No.
0

项目名称 Project Name	美国海湾大桥 SFOBB	部件图号 Drawing No	SEG041C	报告编号 Report No.	B-WR12123
合同号 Contract No.:	04-0120F4	部件名称 Items Name	7EW LONGITUDINAL DIA PHRAGM	NDT报告编号 Report No.of NDT	B787-UT-12337
项目编号 Project No.:	ZP06-787				

纠正措施:

Correction action to prevent re occurrence:

1.加强焊接监控和道间清理。

1. Improve monitoring of welding and interpass cleaning.

车间负责人(Foreman): Li Zhigang 日期(Date): 4.18

参照的WPS编号 Repair WPS No.	WPS-345-SMAW-1 G(1F)-Repair WPS-345-FCAW-1 G(1F)-Repair-1 WPS-345-SMAW-2 G(2F)-Repair WPS-345-FCAW-2 G(2F)-Repair-1	工艺员 technologist	Meixiaojin 4.18
返修（碳刨）前预热温度 Preheat temperature before gouging	72°C	返修的缺陷 Description of discontinuity	Z-F
焊前处理检查 Inspection before welding	Acc	焊前预热温度 Preheat temperature before welding	109°C
最大碳刨深度 Max. depth of gouging	7mm	碳刨总长 Total length of gouging	125mm

焊工 welder	045138	焊接类型 welding type	SMAW	焊接位置 position	2G
焊接电流 Current	172	焊接电压 Voltage	25-3	焊接速度 Speed	159

返修后检查

Inspection After repairing:

外观检查 VT result	Acc	检验员 Inspector	07120701 Li Guohua	日期 Date	2010.4.23
NDT复检 NDT result	Acc	探伤员 NDT person	Zonkey	日期 Date	10.4.27

见证：
Witness/Review:

备注：
Remark：

REPORT OF ULTRASONIC EXAMINATION
UT探伤报告

REPORT NO. 报告编号 B787-UT-12337	DATE 2010.04.15	PAGE 1 OF 1	Revision No: 0

PROJECT NO. :工程编号 ZP06-787		CONTRACTOR : CALTRANS
ITEMS NAME: 部件名称 7EW LONGITUDINAL DIAPHRAGM	DRAWING NO.: 图号 SEG041C	CALTRANS CONTRACT NO.: 04-0120F4 加州工程编号

REFERENCING CODE 参考规范	ACCEPTANCE STANDARD 接受标准	PROCEDURE NO. 程序编号
AWS D1.5-2002	AWS D1.5-2002(Table 6.3)	ZPQC-UT-01
WELDING PROCESS 焊接方法	JOINT TYPE 焊缝类型	CALIBRATION DUE DATE 仪器校正有效期
FCAW	CORNER-JOINT	Dec. 28ST ,2010

EQUIPMENT 设备	MANUFACTURER 制造商	MODEL NO. 样式编号	SERIAL NO. 序列编号
UT SCOPE	PANAMETRICS	EPOCH-4B	071565311, 061488510, 061495811, 070152011,
CALIBRATION BLOCK 试块	COUPLANT 耦合剂	MATERIAL/THICKNESS 材料厚度	
AWS IIW BLOCK TYPE II	C.M.C	A709M-345T2/F2-X	18/20mm

TRANSDUCER 探头

MANUFACTURER 制造商	ANGLE 角度	FREQUENCY 频率	SIZE 尺寸	MANUFACTURER 制造商	ANGLE 角度	FREQUENCY 频率	SIZE 尺寸
Changchao	70°	2.5MHz	18×18mm				
Changchao	0°	2.5MHz	20mm	Reference Level 参考灵敏度		20dB	

Base metal inspected per AWS D1.5-2002 Section 6.19.5 0° UT OK.

WELD IDENTIFICATION 焊缝部件编号	INDICATION NO. 指示号	PROBE ANGLE 探测角度	FROM FACE 检测面	LEG (次数)	DECIBELS分贝				DISCONTINUITY 不连续性					Discontinuity Evaluation 缺陷估计	Remark 备注
					Indication Level	Reference Level	Attenuation Factor	Indication Rating	LOCATION OF DISCONTINUITY 不连续位置(mm)						
					a	b	c	d	Length 长度	Sound Path 声程	Depth from Surface 距表面深度	From'X 距X	From'Y 距Y		
SEG041C-013	1	70	A	1	36	32	1	+3	25	40	13	+3	1900	REJ.	100%

BLANK

EXAMINED BY主探 Jinfeng Ju 04.15	REVIEWED BY 审核 Han Feng Ju 04.15
LEVEL - II SIGN / DATE	LEVEL - II SIGN / DATE
质量经理 / QCM	用户CUSTOMER
签字 SIGN / 日期 DATE	签字 SIGN / 日期 DATE

(FORM# ZPQC-UT01)

REPORT OF ULTRASONIC EXAMINATION
UT探伤报告

REPORT NO. 报告编号 B787-UT-12337R1	DATE 2010.04.27	PAGE 1 OF 1	Revision No: 0

PROJECT NO. :工程编号 ZP06-787		CONTRACTOR : CALTRANS
ITEMS NAME: 部件名称 7EW LONGITUDINAL DIAPHRAGM	DRAWING NO.: 图号 SEG041C	CALTRANS CONTRACT NO.: 04-0120F4 加州工程编号

REFERENCING CODE 参考规范	ACCEPTANCE STANDARD 接受标准	PROCEDURE NO. 程序编号
AWS D1.5-2002	AWS D1.5-2002(Table 6.3)	ZPQC-UT-01
WELDING PROCESS 焊接方法	JOINT TYPE 焊缝类型	CALIBRATION DUE DATE 仪器校正有效期
SMAW	CORNER-JOINT	Dec. 28ST ,2010

EQUIPMENT 设备	MANUFACTURER 制造商	MODEL NO. 样式编号	SERIAL NO. 序列编号
UT SCOPE	PANAMETRICS	EPOCH-4B	071565311, 061488510, 061495811, 070152011,
CALIBRATION BLOCK 试块	COUPLANT 耦合剂	MATERIAL/THICKNESS 材料厚度	
AWS IIW BLOCK TYPE Ⅱ	C.M.C	A709M-345T2/F2-X	18/20mm

TRANSDUCER 探头

MANUFACTURER 制造商	ANGLE 角度	FREQUENCY 频率	SIZE 尺寸	MANUFACTURER 制造商	ANGLE 角度	FREQUENCY 频率	SIZE 尺寸
Changchao	70°	2.5MHz	18×18mm				
Changchao	0°	2.5MHz	20mm	Reference Level 参考灵敏度		20dB	

Base metal inspected per AWS D1.5-2002 Section 6.19.5 0° UT OK.

WELD IDENTIFICATION 焊缝部件编号	INDICATION NO. 指示号	PROBE ANGLE 探测角度	FROM FACE 检测面	LEG (次数)	DECIBELS分贝				DISCONTINUITY 不连续性					Discontinuity Evaluation 缺陷估计	Remark 备注
					Indication Level	Reference Level	Attenuation Factor	Indication Rating	LOCATION OF DISCONTINUITY 不连续位置(mm)						
					a	b	c	d	Length 长度	Sound Path 声程	Depth from Surface 距表面深度	From'X 距X	From'Y 距Y		
SEG041C-013	1R1	70				32								ACC.	100%
AFTER B-WR12123															
BLANK															

EXAMINED BY主探	REVIEWED BY 审核
LEVEL - II SIGN Ting Feng DATE 10.04.27	LEVEL - II SIGN Huang Ting / DATE 10-04-27
质量经理 / QCM	用户CUSTOMER
签字 SIGN / 日期 DATE	签字 SIGN / 日期 DATE

(FORM# ZPQC-UT01)

DEPARTMENT OF TRANSPORTATION - District 4 Toll Bridge
333 Burma Road
Oakland CA 94607
Tel: Fax:

NON-CONFORMANCE REPORT TRANSMITTAL

To:	AMERICAN BRIDGE/FLUOR, A JV 375 BURMA ROAD OAKLAND CA 95607	**Date:**	05-Jan-2010
		Contract No:	04-0120F4 04-SF-80-13.2 / 13.9
Dear:	Mr. Charles Kanapicki	**Job Name:**	SAS Superstructure
Attention:	Mr. Thomas Nilsson Project/Fabrication Manager	**Document No:**	05.03.06-000551
Subject:	NCR No. ZPMC-0561		

Reference Description: MT indications discovered after ZPMC had tested and accepted welds on Segment 8BE Corner Assembly

The attached Non-Conformance Report describes an occurrence where the contractor did not comply with a requirement of the contract document as indicated below:

- ☑ Material or Workmanship not in conformance with contract documents.
- ☑ Quality Control (QC) not performed in conformance with contract documents.
- ☐ Recurring QC issue that constitutes a systematic problem in quality control.
- ☐ Non-Conformance Resolved.

Material Location: OBG **Lift:** 08

Remarks:

During the Quality Assurance Magnetic Particle Testing (MT) review of welds located on Segment 8BE, this Quality Assurance Inspector (QA) discovered the following issues:

-Two (2) Longitudinal linear indication measuring approximately 22mm and 35mm in length.

-The welds are identified as: CSD5-PP67-052 (22 mm) and CSD5-PP67-026 (35 mm).

-The welds are a Fillet Weld type joining the Side Plate (SP467A) and Edge Plate (EP95A) stiffeners to Corner Assembly (CA52A) web plates.

-The OBG 8BE segment is located outside in front of the Blast Shop.

The Notice of Witness Inspection Number (NWIT) is 004978. The indication is located inside the area that has been previously tested and accepted by ZPMC Quality Control (QC) personnel. ZPMC's QC personnel are required to perform twenty five (25%) percent MT inspection of this weld.

Action Required and/or Action Taken:

Propose a resolution for the identified non-conformance with revised procedures to prevent future occurrences. Missed MT indications are a chronic issue on the project. Provide the training and equipment required to the ZPMC MT technician to ensure this type of indication is not missed in the future. A response for the resolution of this issue is expected within 7 days.

Transmitted by: Bill Howe Sr. Transportation Engineer

Attachments: ZPMC-0561

cc: Rick Morrow, Gary Pursell, Peter Siegenthaler, Stanley Ku, Brian Boal, Jason Tom, Contract Files, Ching Chao

File: 05.03.06

STATE OF CALIFORNIA--BUSINESS,TRANSPORTACTION AND HOUSING AGENCY Arnold Schwarzenegger, Governor

DEPARTMENT OF TRANSPORTATION
DIVISION OF ENGINEERING SERVICES
Office of Structural Materials
Quality Assurance and Source Inspection

Bay Area Branch
690 Walnut Ave.St. 150
Vallejo, CA 94592-1133
(707) 649-5453
(707) 649-5493

Contract #: 04-0120F4
Cty: SF/ALA Rte: 80 PM: 13.2/13.9
File #: 69.25B

QUALITY ASSURANCE -- NON-CONFORMANCE REPORT

Location: Changxing Island, Shanghai, P.R. China
Prime Contractor: American Bridge/Fluor Enterprises, a JV
Submitting Contractor: Zhenhua Port Machinery Company, Ltd (ZPMC), Changxing Island

Report No: NCR-000588
Date: 03-Jan-2010
NCR #: ZPMC-0561

Type of problem:

Welding	☐	**Concrete**	☐	**Other**	☑	
Welding	☐	**Curing**	☐	**Procedural**	☐	**Bridge No:** 34-0006
Joint fit-up	☐	**Coating**	☐	**Other**	☑	**Component:** OBG Segment 8BE Corner Assembly
Procedural	☐	**Procedural**	☐			**Description:** Missed MT indication by QC

Reference Description: MT indications discovered after ZPMC had tested and accepted welds on Segment 8BE Corner Assembly

Description of Non-Conformance:

During the Quality Assurance Magnetic Particle Testing (MT) review of welds located on Segment 8BE, this Quality Assurance Inspector (QA) discovered the following issues:

-Two (2) Longitudinal linear indication measuring approximately 22mm and 35mm in length.

-The welds are identified as: CSD5-PP67-052 (22 mm) and CSD5-PP67-026 (35 mm).

-The welds are a Fillet Weld type joining the Side Plate (SP467A) and Edge Plate (EP95A) stiffeners to Corner Assembly (CA52A) web plates.

-The OBG 8BE segment is located outside in front of the Blast Shop.

The Notice of Witness Inspection Number (NWIT) is 004978. The indication is located inside the area that has been previously tested and accepted by ZPMC Quality Control (QC) personnel. ZPMC's QC personnel are required to perform twenty five (25%) percent MT inspection of this weld.

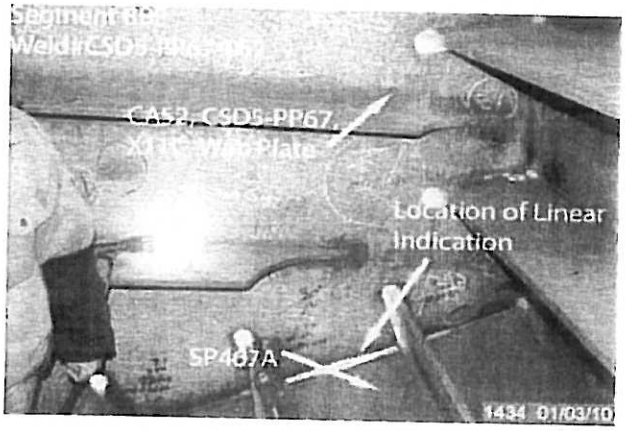

QUALITY ASSURANCE -- NON-CONFORMANCE REPORT

(Continued Page 2 of 2)

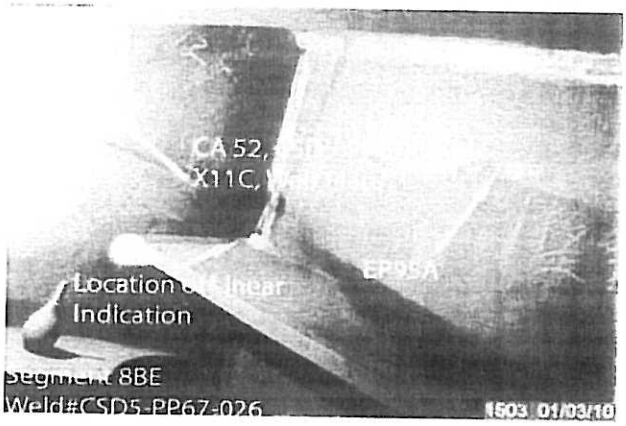

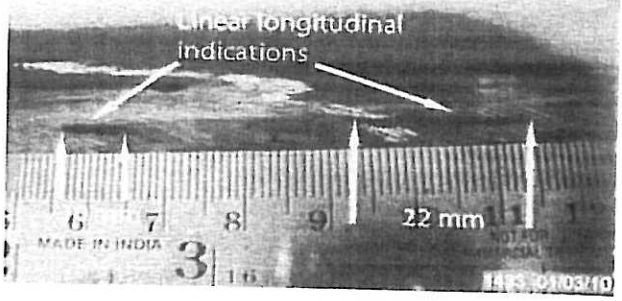

Applicable reference:

Special Provisions Section 8.3 – "Quality Control (QC) shall be the responsibility of the Contractor. As a minimum, the Contractor shall perform inspection and testing of each weld joint prior to welding, during welding, and after welding as specified in this section and to ensure that materials and workmanship conform to the requirements of the contract documents."

AWS D1.5 (02) Section 6.26.2 – "Welds that are subject to MT in addition to visual inspection shall have no cracks.

Who discovered the problem: Hiranch Patel

Name of individual from Contractor notified: Man Lee Kit

Time and method of notification: 1700 hours, 01/03/10, Verbal

Name of Caltrans Engineer notified: Bill Howe

Time and method of notification: 2230 hours, 01/03/10, Email

QC Inspector's Name: Wang Xian Pin

Was QC Inspector aware of the problem: ☐ **Yes** ☑ **No**

Contractor's proposal to correct the problem:

N/A

Comments:

This report is for the purpose of determining conformance with the contract documents and is not for the purpose of making repair or fit for purpose recommendations. Should you require recommendations concerning repairs or remedial efforts please contact Mazen Wahbeh, +(86) 134.7247.7571, who represents the Office of Structural Materials for your project.

Inspected By:	Carreon,Albert	Lead Reviewer/Task Leader
Reviewed By:	Wahbeh,Mazen	SMR

ZPMC

REPORT OF MAGNETIC PARTICLE EXAMINATION

磁粉检测报告

REPORT NO. 报告编号 B787-MT-16598R1	DATE日期 2010.04.26	PAGE OF页码 1/1	Revision No: 0

PROJECT NO. 工程编号: ZP06-787		CONTRACTOR: 用 户: CALTRANS	
DRAWING NO. 图号: CSD5 OBG CORNER ASSEMBLY		CALTRANS CONTRACT NO.: 加州工程编号 04-0120F4	
REFERENCING CODE 参考规范编码 AWS D1.5-2002	ACCEPTANCE STANDARD 接受标准 AWS D1.5-2002	PROCEDURE NO. 程序编号 ZPQC-MT-01	CALIBRATION DUE DATE 仪器校正有效期 Dec. 28ST ,2010
EQUIPMENT 设备 MT YOKE	MANUFACTURER 制造商 PARKER	MODEL NO. 样式编号 B310S	SERIAL NO. 连续编号 5395 5617 5620
MAGNETIZING METHOD 磁化方法	Continuous magnetic yoke 磁轭式连续法	CURRENT 电流	AC
PARTICLE TYPE 磁粉类型	Dry magnet powder 干磁粉	YOKE SPACING 磁轭间距	70～150mm
MATERIAL TO BE EXAMINED 检测材料	√WELDING 焊接件 ☐ CASTING 铸件 ☐ FORGING 锻造	Material & thickness 母材,厚度	A709M-345T2-X 18/28mm
WELDING PROCESS 焊接方法	SMAW	TYPE OF JOINT 焊缝类型	T-JOINT

WELD I.D. 焊缝编号	DISCONTINUITY不连续性			ACCEPT 接受	REJECT 拒收	REMARKS 备注
	INDICATION 指示	TYPE 类型	LENGTH IN mm 长度			
CSD5-PP67-025	1R1			ACC.		100%MT
CSD5-PP67-051	1R1			ACC.		100%MT
AFTER B-CWR1035						
BLANK						

EXAMINED BY主探 Sun Gongchang SunGongchang 10.04.26

LEVEL - II SIGN 签名 / DATE日期

REVIEWED BY 审核 Sun Wei 10.04.26

LEVEL-II SIGN / DATE日期

质量经理 / QCM

签字 SIGN / 日期 DATE

用户CUSTOMER

签字 SIGN / 日期 DATE

(FORM# ZPQC-MT01)

DEPARTMENT OF TRANSPORTATION - District 4 Toll Bridge
333 Burma Road
Oakland CA 94607
Tel: Fax:

NON-CONFORMANCE REPORT TRANSMITTAL

To: AMERICAN BRIDGE/FLUOR, A JV
375 BURMA ROAD
OAKLAND CA 95607

Date: 03-Jan-2010

Contract No: 04-0120F4
04-SF-80-13.2 / 13.9

Dear: Mr. Charles Kanapicki

Job Name: SAS Superstructure

Attention: Mr. Thomas Nilsson Project/Fabrication Manager

Document No: 05.03.06-000544

Subject: NCR No. ZPMC-0554

Reference Description: Missed MT transverse indication by QC for Segment 8CE Corner Assembly

The attached Non-Conformance Report describes an occurrence where the contractor did not comply with a requirement of the contract document as indicated below:

- ☑ Material or Workmanship not in conformance with contract documents.
- ☑ Quality Control (QC) not performed in conformance with contract documents.
- ☐ Recurring QC issue that constitutes a systematic problem in quality control.
- ☐ Non-Conformance Resolved.

Material Location: OBG **Lift:** 08

Remarks:

During the Quality Assurance Magnetic Particle Testing (MT) review of welds located on OBG Corner Assembly, this Quality Assurance Inspector (QA) discovered the following issue:

-One (1) Transverse linear indication that measured approximately 8mm in length.

-The weld is identified as CA051-010 at panel point (PP64.5 in Segment 8BE).

-The weld is a fillet weld joining the Vertical Longitudinal Truss (X74H) to the Side Plate (SP458A)

-The Side Panel plate is identified as: PL1353A.

-The OBG Corner Assembly is located in the outside repair yard, south side of the Bay14.

The Notice of Witness Inspection Number (NWIT) is 004978. The indication is located inside the area that has been previously tested and accepted by ZPMC Quality Control (QC) personnel. As per the contract documents, ZPMC's QC personnel are required to perform 100% Magnetic Particle inspection of this weld.

Action Required and/or Action Taken:

Propose a resolution for the identified non-conformance with revised procedures to prevent future occurrences. Provide training and equipment as required to the ZPMC MT technician in order to pick up these indications in the future. A response for the resolution of this issue is expected within 7 days.

Transmitted by: Bill Howe Sr. Transportation Engineer

Attachments: ZPMC-0554

cc: Rick Morrow, Gary Pursell, Peter Siegenthaler, Stanley Ku, Brian Boal, Jason Tom, Contract Files, Ching Chao

File: 05.03.06

STATE OF CALIFORNIA--BUSINESS,TRANSPORTACTION AND HOUSING AGENCY Arnold Schwarzenegger, Governor

DEPARTMENT OF TRANSPORTATION
DIVISION OF ENGINEERING SERVICES
Office of Structural Materials
Quality Assurance and Source Inspection

Bay Area Branch
690 Walnut Ave.St. 150
Vallejo, CA 94592-1133
(707) 649-5453
(707) 649-5493

Contract #: 04-0120F4
Cty: SF/ALA Rte: 80 PM: 13.2/13.9
File #: 69.25B

QUALITY ASSURANCE -- NON-CONFORMANCE REPORT

Location: Changxing Island, Shanghai, P.R. China **Report No:** NCR-000581
Prime Contractor: American Bridge/Fluor Enterprises, a JV **Date:** 02-Jan-2010
Submitting Contractor: Zhenhua Port Machinery Company, Ltd (ZPMC), Changxing Island **NCR #:** ZPMC-0554

Type of problem:

Welding	☐	**Concrete**	☐	**Other**	☑	
Welding	☐	**Curing**	☐	**Procedural**	☐	**Bridge No:** 34-0006
Joint fit-up	☐	**Coating**	☐	**Other**	☑	**Component:** Segment 8CE Corner Assembly
Procedural	☐	**Procedural**	☐	**Description:** Missed MT transverse indication by QC		

Reference Description: Missed MT transverse indication by QC for Segment 8CE Corner Assembly

Description of Non-Conformance:

During the Quality Assurance Magnetic Particle Testing (MT) review of welds located on OBG Corner Assembly, this Quality Assurance Inspector (QA) discovered the following issue:
-One (1) Transverse linear indication that measured approximately 8mm in length.
-The weld is identified as CA051-010 at panel point (PP64.5 in Segment 8BE).
-The weld is a fillet weld joining the Vertical Longitudinal Truss (X74H) to the Side Plate (SP458A)
-The Side Panel plate is identified as: PL1353A.
-The OBG Corner Assembly is located in the outside repair yard, south side of the Bay14.
The Notice of Witness Inspection Number (NWIT) is 004978. The indication is located inside the area that has been previously tested and accepted by ZPMC Quality Control (QC) personnel. As per the contract documents, ZPMC's QC personnel are required to perform 100% Magnetic Particle inspection of this weld.

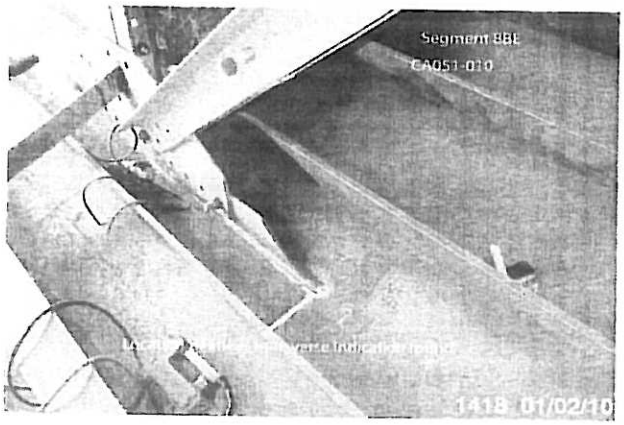

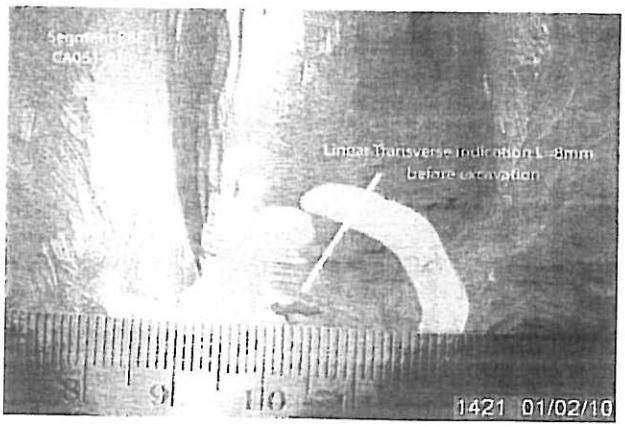

Applicable reference:

Special Provisions Section 8.3 – "Quality Control (QC) shall be the responsibility of the Contractor. As a minimum, the Contractor shall perform inspection and testing of each weld joint prior to welding, during

QUALITY ASSURANCE -- NON-CONFORMANCE REPORT

(Continued Page 2 of 2)

welding, and after welding as specified in this section and to ensure that materials and workmanship conform to the requirements of the contract documents."

AWS D1.5 (02) Section 6.26.2 – "Welds that are subject to MT in addition to visual inspection shall have no cracks.

Who discovered the problem: Chandra Sudalaimuthu

Name of individual from Contractor notified: Peter Shaw

Time and method of notification: 1430 hours, 01/02/10, Verbal

Name of Caltrans Engineer notified: Bill Howe

Time and method of notification: 2300 hours, 01/02/10, Email

QC Inspector's Name: Wang Xian Pin

Was QC Inspector aware of the problem: ☐ **Yes** ☑ **No**

Contractor's proposal to correct the problem:

N/A

Comments:

This report is for the purpose of determining conformance with the contract documents and is not for the purpose of making repair or fit for purpose recommendations. Should you require recommendations concerning repairs or remedial efforts please contact Mazen Wahbeh, (818) 292-0659, who represents the Office of Structural Materials for your project.

Inspected By:	Tsang,Eric	SMR
Reviewed By:	Wahbeh,Mazen	SMR

ZPMC

REPORT OF MAGNETIC PARTICLE EXAMINATION

磁粉检测报告

REPORT NO. 报告编号 B787-MT-16620R1	DATE日期 2010.04.26	PAGE OF页码 1/1	Revision No: 0

PROJECT NO. 工程编号:	ZP06-787	CONTRACTOR: 用 户:	CALTRANS
DRAWING NO. 图号:	CA51 OBG CORNER ASSEMBLY	CALTRANS CONTRACT NO.: 加州工程编号	04-0120F4

REFERENCING CODE 参考规范编码 AWS D1.5-2002	ACCEPTANCE STANDARD 接受标准 AWS D1.5-2002	PROCEDURE NO. 程序编号 ZPQC-MT-01	CALIBRATION DUE DATE 仪器校正有效期 Dec. 28ST ,2009
EQUIPMENT 设备 MT YOKE	MANUFACTURER 制造商 PARKER	MODEL NO. 样式编号 B310S	SERIAL NO. 连续编号 5395 5617 5620
MAGNETIZING METHOD 磁化方法	Continuous magnetic yoke 磁轭式连续法	CURRENT 电流	AC
PARTICLE TYPE 磁粉类型	Dry magnet powder 干磁粉	YOKE SPACING 磁轭间距	70～150mm
MATERIAL TO BE EXAMINED 检测材料	√WELDING 焊接件 ☐ CASTING 铸件 ☐ FORGING 锻造	Material & thickness 母材,厚度	A709M-345T2-X 18/14mm
WELDING PROCESS 焊接方法	SMAW	TYPE OF JOINT 焊缝类型	T JOINT

WELD I.D. 焊缝编号	DISCONTINUITY不连续性			ACCEPT 接受	REJECT 拒收	REMARKS 备注
	INDICATION 指示	TYPE 类型	LENGTH IN mm 长度			
CA051-008	1R1			ACC.		
AFTER B-CWR1036						
BLANK						

EXAMINED BY主探 Sun gong chang LEVEL - II SIGN 签名 / DATE日期 Sun Gong chang 10.04.26	REVIEWED BY 审核 SIGNED LEVEL-II SIGN / DATE日期 10.04.26
质量经理 / QCM 签字 SIGN / 日期 DATE	用户CUSTOMER 签字 SIGN / 日期 DATE

DEPARTMENT OF TRANSPORTATION
DIVISION OF ENGINEERING SERVICES
Office of Structural Materials
Quality Assurance and Source Inspection

Bay Area Branch
690 Walnut Ave.St. 150
Vallejo, CA 94592-1133
(707) 649-5453
(707) 649-5493

Contract #: 04-0120F4
Cty: SF/ALA Rte: 80 PM: 13.2/13.9
File #: xx.25A

QUALITY ASSURANCE -- NON-CONFORMANCE RESOLUTION

Location: Changxing Island, Shanghai, P.R. China **Report No:** NCS-000636
Prime Contractor: American Bridge/Fluor Enterprises, a JV **Date:** 30-May-2010
Submitting Contractor: Zhenhua Port Machinery Company, Ltd (ZPMC), Changxing Island **NCR #:** ZPMC-0554

Type of problem:

Welding	☐	**Concrete**	☐	**Other**	☑	
Welding	☐	**Curing**	☐	**Procedural**	☐	**Bridge No:** 34-0006
Joint fit-up	☐	**Coating**	☐	**Other**	☑	**Component:**
Procedural	☐	**Procedural**	☐	**Descripton:**		

Date the Non-Conformance Report was written: 02-Jan-2010

Description of Non-Conformance:

During the Quality Assurance Magnetic Particle Testing (MT) review of welds located on OBG Corner Assembly, this Quality Assurance Inspector (QA) discovered the following issue:
-One (1) Transverse linear indication that measured approximately 8mm in length.
-The weld is identified as CA051-010 at panel point (PP64.5 in Segment 8BE).
-The weld is a fillet weld joining the Vertical Longitudinal Truss (X74H) to the Side Plate (SP458A)
-The Side Panel plate is identified as: PL1353A.
-The OBG Corner Assembly is located in the outside repair yard, south side of the Bay14.
The Notice of Witness Inspection Number (NWIT) is 004978. The indication is located inside the area that has been previously tested and accepted by ZPMC Quality Control (QC) personnel. As per the contract documents, ZPMC's QC personnel are required to perform 100% Magnetic Particle inspection of this weld.

Contractor's proposal to correct the problem:

Repair said indication and perform NDT required to verify weld quality.

Corrective action taken:

Contractor submitted post repair NDT documentation verifying weld has been repaired and is in conformance with Contract weld quality requirements. Supplemental training was provided to NDT technicians as well.

Did corrective action require Engineer's approval? ☐ **Yes** ☑ **No**
If so, name of Engineer providing approval: **Date:**
Is Engineer's approval attached? ☐ **Yes** ☑ **No**

Comments:

This report is for the purpose of determining conformance with the contract documents and is not for the purpose of making repair or fit for purpose recommendations. Should you require recommendations concerning repairs or remedial efforts please contact Jim Simonis , who represents the Office of Structural Materials for your project.

QUALITY ASSURANCE -- NON-CONFORMANCE RESOLUTION

(Continued Page 2 of 2)

Inspected By:	Simonis,Jim	Quality Assurance Inspector
Reviewed By:	Wahbeh,Mazen	QA Reviewer