DEPARTMENT OF TRANSPORTATION
DIVISION OF ENGINEERING SERVICES
Office of Structural Materials
Quality Assurance and Source Inspection

Bay Area Branch
690 Walnut Ave.St. 150
Vallejo, CA 94592-1133
(707) 649-5453
(707) 649-5493

Contract #: 04-0120F4
Cty: SF/ALA Rte: 80 PM: 13.2/13.9
File #: 69.25B

QUALITY ASSURANCE -- NON-CONFORMANCE REPORT

Location: Changxing Island, Shanghai, P.R. China **Report No:** NCR-000567
Prime Contractor: American Bridge/Fluor Enterprises, a JV **Date:** 28-Dec-2009
Submitting Contractor: Zhenhua Port Machinery Company, Ltd (ZPMC), Changxing Island **NCR #:** ZPMC-0540

Type of problem:

Welding	☐	**Concrete**	☐	**Other**	☑	
Welding	☐	**Curing**	☐	**Procedural**	☐	**Bridge No:** 34-0006
Joint fit-up	☐	**Coating**	☐	**Other**	☑	**Component:** Segment 8CE Deck Plate
Procedural	☐	**Procedural**	☐	**Description:**		Missed UT Indication by QC

Reference Description: Missed UT indications by QC on Segment 8CE Deck Panel joint

Description of Non-Conformance:

During the Quality Assurance Ultrasonic Testing (UT) review of weld located on Segment 8CE, this Quality Assurance Inspector (QA) discovered the following issue:
-One (1) Class "A" indication measuring approximately 40 mm in length.
-The dB rating is +6.
-The weld is identified as SEG048*-005.
-The weld is a Complete Joint Penetration (CJP) butt weld joining Deck Plate DP364A to DP337A.
-The indication is clearly marked by QA on/near the weld.
-OBG Segment 8CE is located in front of blast bay 1.
-This QA generated a TL-6027 UT report for this weld on this date.
The Notice of Witness Inspection Number (NWIT) is 004949. The indication is located inside the area that has been previously tested and accepted by ZPMC Quality Control (QC) personnel. As per the contract documents, ZPMC's QC personnel are required to perform 100% UT inspection of this weld.

Applicable reference:

-AWS D1.5-2002, Section 6, Table 6.3 specifies a class A indication as having a dBs rating of +10 and lower for weld thicknesses 8mm through 20mm.

-Special Provisions Section 8.3: "Quality Control (QC) shall be the responsibility of the Contractor. As a minimum, the Contractor shall perform inspection and testing of each weld joint prior to welding, during welding, and after welding as specified in this section and to ensure that materials and workmanship conform to the requirements of the contract documents."

Who discovered the problem: Chandra Sudalaimuthu
Name of individual from Contractor notified: Wang Chao
Time and method of notification: 1700 hours_12/28/09_Verbal
Name of Caltrans Engineer notified: Bill Howe

QUALITY ASSURANCE -- NON-CONFORMANCE REPORT

(Continued Page 2 of 2)

Time and method of notification: 0900 hours_12/29/09_Verbal

QC Inspector's Name: Wang Weiming

Was QC Inspector aware of the problem: ☐ **Yes** ☑ **No**

Contractor's proposal to correct the problem:

N/A

Comments:

This report is for the purpose of determining conformance with the contract documents and is not for the purpose of making repair or fit for purpose recommendations. Should you require recommendations concerning repairs or remedial efforts please contact Mazen Wahbeh, +(86) 134.7247.7571, who represents the Office of Structural Materials for your project.

Inspected By:	Tsang,Eric	SMR
Reviewed By:	Wahbeh,Mazen	SMR

DEPARTMENT OF TRANSPORTATION - District 4 Toll Bridge
333 Burma Road
Oakland CA 94607
Tel: Fax:

NON-CONFORMANCE REPORT TRANSMITTAL

To:	AMERICAN BRIDGE/FLUOR, A JV 375 BURMA ROAD OAKLAND CA 95607	**Date:**	29-Dec-2009
		Contract No:	04-0120F4 04-SF-80-13.2 / 13.9
Dear:	Mr. Charles Kanapicki	**Job Name:**	SAS Superstructure
Attention:	Mr. Thomas Nilsson Project/Fabrication Manager	**Document No:**	05.03.06-000530
Subject:	NCR No. ZPMC-0540		

Reference Description: Missed UT indications by QC on Segment 8CE Deck Panel joint

The attached Non-Conformance Report describes an occurrence where the contractor did not comply with a requirement of the contract document as indicated below:

- ☑ Material or Workmanship not in conformance with contract documents.
- ☑ Quality Control (QC) not performed in conformance with contract documents.
- ☐ Recurring QC issue that constitutes a systematic problem in quality control.
- ☐ Non-Conformance Resolved.

Material Location: OBG **Lift:** 08

Remarks:

During the Quality Assurance Ultrasonic Testing (UT) review of weld located on Segment 8CE, this Quality Assurance Inspector (QA) discovered the following issue:

-One (1) Class “A” indication measuring approximately 40 mm in length.

-The dB rating is +6.

-The weld is identified as SEG048*-005.

-The weld is a Complete Joint Penetration (CJP) butt weld joining Deck Plate DP364A to DP337A.

-The indication is clearly marked by QA on/near the weld.

-OBG Segment 8CE is located in front of blast bay 1.

-This QA generated a TL-6027 UT report for this weld on this date.

The Notice of Witness Inspection Number (NWIT) is 004949. The indication is located inside the area that has been previously tested and accepted by ZPMC Quality Control (QC) personnel. As per the contract documents, ZPMC’s QC personnel are required to perform 100% UT inspection of this weld.

Action Required and/or Action Taken:

Submit a repair procedure to the engineer for approval. Ensure that the ZPMC technician that missed this indication is trained and equipped in such a manner as to identify these indications in the future.

Transmitted by: Bill Howe

Attachments: ZPMC-0540

cc: Rick Morrow, Gary Pursell, Peter Siegenthaler, Stanley Ku, Brian Boal, Jason Tom, Contract Files, Ching Chao

File: 05.03.06

AMERICAN BRIDGE/FLUOR ENTERPRISES, a JV
P.O. BOX 23223 Oakland, CA 94623
Phone (510) 419-0120 / Fax (510) 839-0666

NCR PROPOSED RESOLUTION

To: CALTRANS - SAS Superstructure
333 Burma Road
Oakland CA 94607

Attention: Pursell, Gary
Resident Engineer

Ref: 05.03.06-000530

Subject: NCR No. ZPMC-0540

Dated: **18-Jan-2010**

Contract No.: 04-0120F4
04-SF-80-13.2 / 13.9

Job Name: SAS Superstructure

Document No.: **ABF-NPR-000520 Rev: 00**

Contractor's Proposed Resolution:

Reference Resolution: As a means of preventing future occurrences, the ABF QCM has performed refresher UT training. See attached UT training agenda and attendance roster.

As it is necessary to respond to the NCR with a proposed plan of action, ABF is doing so without all of the repair documentation at this time. As a means of preventing future occurrences, the ABF QCM has performed refresher UT training. See attached UT training agenda and attendance roster. The ABF QCM has been discussing missed UT indications with the ZPMC QCM and related NDT supervisory personnel. The ZPMC level III is in the process of assessing personnel, techniques and equipment. ABF has purchased GE Technology transducers to distribute to both ZPMC and ABF UT personnel in a cooperative effort to match the equipment of CT. These transducers will arrive to the job site approximately the end of January 10 at which time they will be put into immediate use. ZPMC requests this NCR be placed in the Approved Action Pending status category until such time that all the repair documents have been assembled and submitted.

Submitted by: Lawton, Steve

Attachment(s): ABF-NPR-000520R00;

Caltrans' comments:

Status: AAP

Date: 25-Jan-2010

The preventative measures taken by the QCM and the proposed resolution for closing NCR submitted by the contractor are acceptable. The NCR will be closed upon completion of the repair and review of the repair documents by the Engineer when submitted by the contractor.

Submitted by: Chao, Ching

Date: 25-Jan-2010

Attachment(s):

American Bridge / FLUOR
A JOINT VENTURE

UT Refresher Training Agenda

Subject: UT Techniques

Reason for Training: Several CT NCR's for missed UT indications

1. **Safety**
   a. Safety Glasses
   b. Gloves (if required)
   c. Knee Pads
   d. Electrical Shock

2. **Tools**
   a. Calibrated UT Machine — condition of machine
   b. Coaxial cable — condition of cable
   c. Transducer — condition of transducer
   d. IIW Block
   e. Scraper
   f. UT couplant

3. **Inspection Techniques**
   a. Surface preparation
   b. Location of weld — UT from beveled plate
   c. Scanning patterns
   d. Correct choice of Angles
   e. Calibration — per ZPMC procedure at regular intervals
   f. Scanning speed
   g. Know where your sound is at…. First leg, second leg etc…

4. **Inspection Criteria**
   a. Table 6.3 or Table 6.4
   b. Are surface inspections complete — VT and or MT should always occur before UT
   c. Scanning Levels
   d. Criteria dictated by the thinner of the two members
   e. Planar flaws

ZPMC

教育培训纪录

培训编号：

培训内容：	UT复习培训教程 UT Techniques
培训对像：	ZPMC UT GUYS
授课人员：	STEVE LAWTON
培训类型：	UT Refresher Training Agenda
培训时间：	2009. 12. 24. 16:30
计划培训地点：	ZPMC NDT OFFICE

人员签到：

姓名	部门	姓名	部门
代更龙 Dai Gengshen	江勇 Jiang Yong		
薛[illegible] Xuelianmin	黄[illegible] Huang Ting		
马[illegible] Ma Jiang	黄[illegible] Huang Tin		
汤[illegible] Tang Xingshan	李[illegible] Li Liming		
马[illegible] Ma Jian	王[illegible] Wang [illegible]		
邱[illegible] Qiu Qiangfu	徐[illegible] Xu Rongyang		
况[illegible] Huang Jian	李[illegible] LI XIUYANG		
黄[illegible] Huang Jing			
金[illegible] Jing Jing			
吴[illegible] Wuchao			
鹏[illegible] Lou Dui			
周[illegible] Zhouhaijun			
徐[illegible] Xuhao			

AMERICAN BRIDGE/FLUOR ENTERPRISES, a JV
P.O. BOX 23223 Oakland, CA 94623
Phone (510) 419-0120 / Fax (510) 839-0666

NCR PROPOSED RESOLUTION

To: CALTRANS - SAS Superstructure
333 Burma Road
Oakland CA 94607

Attention: Pursell, Gary
Resident Engineer

Ref: 05.03.06-000530

Subject: NCR No. ZPMC-0540

Dated: **04-May-2010**

Contract No.: 04-0120F4
04-SF-80-13.2 / 13.9

Job Name: SAS Superstructure

Document No.: **ABF-NPR-000520 Rev: 01**

Contractor's Proposed Resolution:

Reference Resolution: Per the NCT, ZPMC is submitting the repair report used during repair of the missed indication and NDT to show that the weld is now acceptable.

Per the NCT, ZPMC is submitting the repair report used during repair of the missed indication and NDT to show that the weld is now acceptable. ZPMC has written an internal NCR to document this issues and warn the ZPMC inspectors of this non conformance. Based on this ZPMC requests closure of this NCR.

Submitted by: Ishibashi, Joshua

Attachment(s): ABF-NPR-000520R01;

Caltrans' comments:

Status: CLO

Date: 05-May-2010

This proposed resolution is acceptable. The documentation received is sufficient and the Department concurs that Non-Conformance ZPMC-0540 is closed.

Submitted by: Eagen, Sean

Date: 05-May-2010

Attachment(s):

No. B-742

LETTER OF RESPONSE

TO: American Bridge/Flour
DATE: 2010-5-1
REGARDING: NCR-000539(ZPMC-0512) NCR-000567(ZPMC-0540)
NCR-000570(ZPMC-0543) NCR-000571(ZPMC-0544)

ZPMC acknowledges several indications were missed and has written internal NCRs. ZPMC is providing the WRRs and NDT records show these rejections have been repaired and rested to be acceptable. Based on this, ZPMC is requesting closure of these NCRs.

ATTACHMENT:
NCR-000539(ZPMC-0512)
B-WR12526
B787-UT-12600 R1
NCR-000567(ZPMC-0540)
B-WR12527
B787-UT-12601 R1
NCR-000570(ZPMC-0543)
B-WR12525
B787-UT-12599 R1
NCR-000571(ZPMC-0544)
B-WR12523
B-WR12524
B787-UT-12598 R1

5/4/10

DEPARTMENT OF TRANSPORTATION - District 4 Toll Bridge
333 Burma Road
Oakland CA 94607
Tel: Fax:

NON-CONFORMANCE REPORT TRANSMITTAL

To: AMERICAN BRIDGE/FLUOR, A JV
375 BURMA ROAD
OAKLAND CA 95607

Date: 24-Dec-2009

Contract No: 04-0120F4
04-SF-80-13.2 / 13.9

Dear: Mr. Charles Kanapicki

Job Name: SAS Superstructure

Attention: Mr. Thomas Nilsson Project/Fabrication Manager

Document No: 05.03.06-000500

Subject: NCR No. ZPMC-0512

Reference Description: Missed UT Indication by QC, Segment 8BW

The attached Non-Conformance Report describes an occurrence where the contractor did not comply with a requirement of the contract document as indicated below:

- ☑ Material or Workmanship not in conformance with contract documents.
- ☑ Quality Control (QC) not performed in conformance with contract documents.
- ☐ Recurring QC issue that constitutes a systematic problem in quality control.
- ☐ Non-Conformance Resolved.

Material Location: OBG **Lift:** 8

Remarks:

The Caltrans Quality Assurance (QA) Inspector performed 10% verification of Ultrasonic Testing (UT) on the weld between FL2 flange to FL1 located at Segment 8BW panel point 65 (PP65). The QA inspector discovered one (1) class "A" non-conforming indication measuring approximately 12 mm in length.

-The non-conforming UT class "A" indication measured approximately 12mm in length.
-The weld is identified as: SSD13A-PP65-128 at PP65.
-The weld is a Complete Joint Penetration (CJP) Tee Joint.
-The OBG Segment 8BW is located at outside the Paint Shop.
-The Notice of Witness Inspection Number (NWIT) is 004508.
-TL-6027 UT report was written by QA inspector B205 on this date.

Action Required and/or Action Taken:

Submit a repair procedure to the engineer for approval. A response for the resolution of this issue is expected within 7 days.

Transmitted by: Bill Howe
Attachments: ZPMC-0512

cc: Rick Morrow, Gary Pursell, Peter Siegenthaler, Stanley Ku, Brian Boal, Jason Tom, Contract Files, Ching Chao
File: 05.03.06

Zeon PDF Driver Trial
www.zeon.com.tw

STATE OF CALIFORNIA--BUSINESS,TRANSPORTACTION AND HOUSING AGENCY Arnold Schwarzenegger, Governor

DEPARTMENT OF TRANSPORTATION
DIVISION OF ENGINEERING SERVICES
Office of Structural Materials
Quality Assurance and Source Inspection

Bay Area Branch
690 Walnut Ave.St. 150
Vallejo, CA 94592-1133
(707) 649-5453
(707) 649-5493

Contract #: 04-0120F4
Cty: SF/ALA Rte: 80 PM: 13.2/13.9
File #: 69.25B

QUALITY ASSURANCE -- NON-CONFORMANCE REPORT

Location: Changxing Island, Shanghai, P.R. China
Prime Contractor: American Bridge/Fluor Enterprises, a JV
Submitting Contractor: Zhenhua Port Machinery Company, Ltd (ZPMC), Changxing Island

Report No: NCR-000539
Date: 17-Dec-2009
NCR #: ZPMC-0512

Type of problem:

Welding	☐	**Concrete**	☐	**Other**	☑	
Welding	☐	**Curing**	☐	**Procedural**	☑	**Bridge No:** 34-0006
Joint fit-up	☐	**Coating**	☐	**Other**	☐	**Component:** OBG Segment 8BW
Procedural	☐	**Procedural**	☐	**Description:**		

Reference Description: Missed UT Indication by QC, Segment 8BW

Description of Non-Conformance:

The Caltrans Quality Assurance (QA) Inspector performed 10% verification of Ultrasonic Testing (UT) on the weld between FL2 flange to FL1 located at Segment 8BW panel point 65 (PP65). The QA inspector discovered one (1) class "A" non-conforming indication measuring approximately 12 mm in length.

-The non-conforming UT class "A" indication measured approximately 12mm in length.
-The weld is identified as: SSD13A-PP65-128 at PP65.
-The weld is a Complete Joint Penetration (CJP) Tee Joint.
-The OBG Segment 8BW is located at outside the Paint Shop.
-The Notice of Witness Inspection Number (NWIT) is 004869.
-TL-6027 UT report was written by QA inspector B205 on this date.

Applicable reference:

AWS D1.5-02 Section 6; Table 6.3

Special Provisions Section 8.3; "Quality Control (QC) shall be the responsibility of the Contractor. As a minimum, the Contractor shall perform inspection and testing of each weld joint prior to welding, during welding, and after welding as specified in this section and to ensure that materials and workmanship conform to the requirements of the contract documents."

Who discovered the problem: Subhasis Bera
Name of individual from Contractor notified: Peter Shaw
Time and method of notification: 1030 hours, 12-17-09, Verbal
Name of Caltrans Engineer notified: Bill Howe
Time and method of notification: 1200 hours, 12-18-09, Verbal

QUALITY ASSURANCE -- NON-CONFORMANCE REPORT

(Continued Page 2 of 2)

QC Inspector's Name: Wang Lu

Was QC Inspector aware of the problem: ☐ Yes ☑ No

Contractor's proposal to correct the problem:

Comments:

This report is for the purpose of determining conformance with the contract documents and is not for the purpose of making repair or fit for purpose recommendations. Should you require recommendations concerning repairs or remedial efforts please contact Eric Tsang, 15000422372, who represents the Office of Structural Materials for your project.

Inspected By:	Guest,Skyler	SMR
Reviewed By:	Wahbeh,Mazen	SMR

ZPMC	焊缝返修报告 Welding Repair Report				版本 Rev. No. 0
项目名称 Project Name	美国海湾大桥 SFOBB	部件图号 Drawing No	SSD13A	报告编号 Report No.	B-WR12526
合同号 Contract No.:	04-0120F4	部件名称 Items Name	8BW FLOOR BEAM SPLICE	NDT报告编号 Report No.of NDT	B787-UT-12600
项目编号 Project No.:	ZP06-787				

焊缝缺陷描述：

Description of welding discontinuity:

Rejected indication found by ultrasonic inspection is less than the maximum allowance aggregate length.

(UT探伤发现的缺陷总长度小于最大允许长度。) SSD13A-PP065-128

Zhou Haijun

检验员（Inspector）Zhou Haijun 日期(Date)：2010.04.26

焊缝返修位置示意图：

Draft of welding discontinuity:

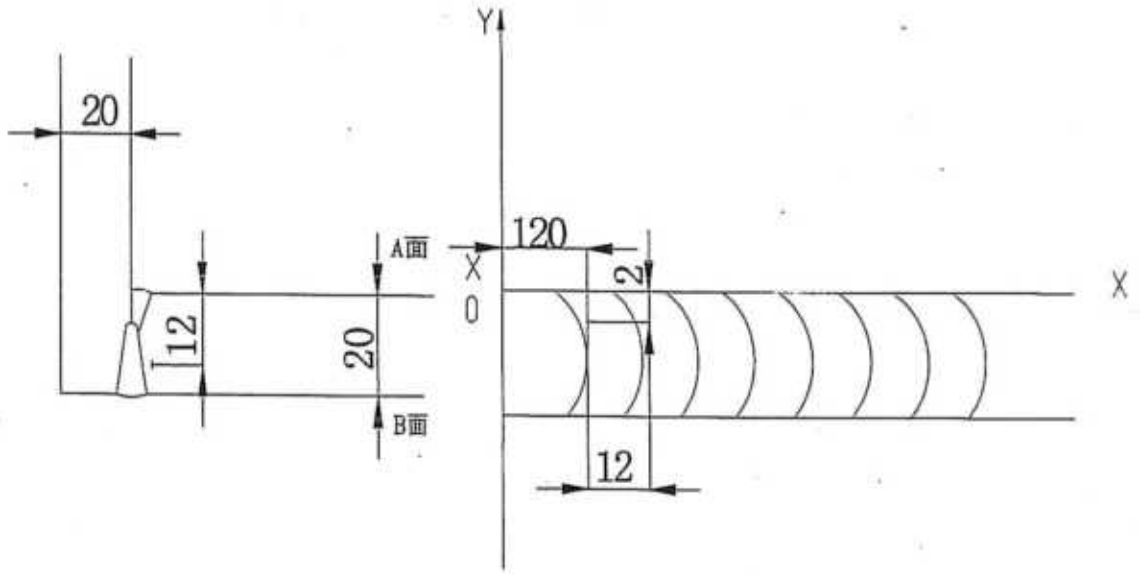

WELD NUMBER: SSD13A-PP065-128

产生原因:

Caused:

1、焊道未及时处理干净。

1. Did not clear the weld pass completely in time.

车间负责人(Foreman): Lishigang 日期(Date): 4.27

处理意见

Disposition：

1. 从缺陷距离端面较近一侧（D≤0.65T, D为缺陷深度，T为板厚）采用碳刨或打磨的方法去除焊缝缺陷;
2. 参照返修焊接工艺规程（WPS）准备正确的接头型式，预热和焊接;
3. 焊前对修补区域进行VT检测保证缺陷完全被清除;
4. 将修补区域打磨到与母材或邻近焊缝平齐;
5. 对焊缝进行UT检测，检测范围为返修区域以及其两端各延长50mm。

1. Gouge or grind from nearer side from metal edge （D≤0.65T, "D" is depth of defects, "T" is thickness of metal） to remove all defects;
2. Follow repair WPS for joint preparation, preheat, and weld deposit;
3. Verify with VT no defects remain in the weld joint prior to welding;
4. Grind the repaired area flush with base metal or the adjacent weld;
5. Perform UT inspection to the weld along with 50mm on each end of the repair area;

工 艺 Hexiaolin.
Technical engineer

审核:
Approved by

日期 10.4.30.
Date

#R787-QCP-900

焊缝返修报告
Welding Repair Report

版本 Rev. No.
0

项目名称 Project Name	美国海湾大桥 SFOBB	部件图号 Drawing No	SSD13A	报告编号 Report No.	B-WR12526 ·
合同号 Contract No.:	04-0120F4	部件名称 Items Name	8BW FLOOR BEAM SPLICE	NDT报告编号 Report No.of NDT	B787-UT-12600
项目编号 Project No.:	ZP06-787				

纠正措施:

Correction action to prevent re occurrence:

1.加强焊接监控和道间清理。

1. Improve monitoring of welding and interpass cleaning.

车间负责人(Foreman): Li Zhigang 日期(Date): 4.30

参照的WPS编号 Repair WPS No.	WPS-345-SMAW-1 G(1F)-Repair WPS-345-FCAW-1 G(1F)-Repair-1 WPS-345-SMAW-4 G(4F)-Repair	工艺员 technologist	Hexiaolin 4.30
返修（碳刨）前预热温度 Preheat temperature before gouging	82°C	返修的缺陷 Description of discontinuity	I-F
焊前处理检查 Inspection before welding	ACC	焊前预热温度 Preheat temperature before welding	131°C
最大碳刨深度 Max. depth of gouging	10mm	碳刨总长 Total length of gouging	112mm

焊工 welder	043661	焊接类型 welding type	SMAW	焊接位置 position	4G
焊接电流 Current	146	焊接电压 Voltage	25.1	焊接速度 Speed	130

返修后检查
Inspection After repairing:

外观检查 VT result	ACC	检验员 Inspector	Liuanhua 071201	日期 Date	2010.05.01
NDT复检 NDT result	ACC	探伤员 NDT person	Zhoukaijun	日期 Date	10.05.02

见证：
Witness/Review:

备注：
Remark：

REPORT OF ULTRASONIC EXAMINATION
UT探伤报告

REPORT NO. 报告编号 B787-UT-12600	DATE 2010.04.26	PAGE 1 OF 1	Revision No: 0

PROJECT NO. :工程编号 ZP06-787		CONTRACTOR : CALTRANS
ITEMS NAME: 部件名称 8BW FLOOR BEAM SPLICE	DRAWING NO.: 图号 SSD13(A)	CALTRANS CONTRACT NO.: 04-0120F4 加州工程编号

REFERENCING CODE 参考规范	ACCEPTANCE STANDARD 接受标准	PROCEDURE NO. 程序编号
AWS D1.5-2002	AWS D1.5-2002(Table 6.3)	ZPQC-UT-01
WELDING PROCESS 焊接方法	JOINT TYPE 焊缝类型	CALIBRATION DUE DATE 仪器校正有效期
FCAW	CORNER-JOINT	Dec. 28ST ,2010

EQUIPMENT 设备	MANUFACTURER 制造商	MODEL NO. 样式编号	SERIAL NO. 序列编号
UT SCOPE	PANAMETRICS	EPOCH-4B	071565311, 061488510, 061495811, 070152011,

CALIBRATION BLOCK 试块	COUPLANT 耦合剂	MATERIAL/THICKNESS 材料厚度
AWS IIW BLOCK TYPE II	C.M.C	A709M-345T2-X 20mm

TRANSDUCER 探头

MANUFACTURER 制造商	ANGLE 角度	FREQUENCY 频率	SIZE 尺寸	MANUFACTURER 制造商	ANGLE 角度	FREQUENCY 频率	SIZE 尺寸
Changchao	70°	2.5MHz	18×18mm				
Changchao	0°	2.5MHz	20mm	Reference Level 参考灵敏度		20dB	

Base metal inspected per AWS D1.5-2002 Section 6.19.5 0° UT OK.

WELD IDENTIFICATION 焊缝部件编号	INDICATION NO. 指示号	PROBE ANGLE 探测角度	FROM FACE 检测面	LEG (次数)	DECIBELS分贝				DISCONTINUITY 不连续性					Discontinuity Evaluation 缺陷估计	Remark 备注
					Indication Level	Reference Level	Attenuation Factor	Indication Rating	LOCATION OF DISCONTINUITY 不连续位置(mm)						
					a	b	c	d	Length 长度	Sound Path 声程	Depth from Surface 距表面深度	From"X 距X	From"Y 距Y		
SSD13A-PP065-128	1	70	A	1	42	32	1	+9	12	36	12	-2	120	REJ.	100%
BLANK															

EXAMINED BY主探 Zhoukejun 10.04.26
LEVEL - II SIGN / DATE

REVIEWED BY 审核 Suwei 10.04.26
LEVEL - II SIGN / DATE

质量经理 / QCM
签字 SIGN / 日期 DATE

用户CUSTOMER
签字 SIGN / 日期 DATE

(FORM# ZPQC-UT01)

REPORT OF ULTRASONIC EXAMINATION
UT探伤报告

REPORT NO. 报告编号	DATE	PAGE	Revision No:
B787-UT-12600R1	2010.05.02	1 OF 1	0

PROJECT NO. :工程编号 ZP06-787		CONTRACTOR : CALTRANS
ITEMS NAME: 部件名称 8BW FLOOR BEAM SPLICE	DRAWING NO.: 图号 SSD13(A)	CALTRANS CONTRACT NO.: 04-0120F4 加州工程编号

REFERENCING CODE 参考规范	ACCEPTANCE STANDARD 接受标准	PROCEDURE NO. 程序编号
AWS D1.5-2002	AWS D1.5-2002(Table 6.3)	ZPQC-UT-01
WELDING PROCESS 焊接方法	JOINT TYPE 焊缝类型	CALIBRATION DUE DATE 仪器校正有效期
SMAW	CORNER-JOINT	Dec. 28ST ,2010

EQUIPMENT 设备	MANUFACTURER 制造商	MODEL NO. 样式编号	SERIAL NO. 序列编号
UT SCOPE	PANAMETRICS	EPOCH-4B	071565311, 061488510, 061495811, 070152011,

CALIBRATION BLOCK 试块	COUPLANT 耦合剂	MATERIAL/THICKNESS 材料厚度	
AWS IIW BLOCK TYPE II	C.M.C	A709M-345T2-X	20mm

TRANSDUCER 探头

MANUFACTURER 制造商	ANGLE 角度	FREQUENCY 频率	SIZE 尺寸	MANUFACTURER 制造商	ANGLE 角度	FREQUENCY 频率	SIZE 尺寸
Changchao	70°	2.5MHz	18×18mm				
Changchao	0°	2.5MHz	20mm	Reference Level 参考灵敏度		20dB	

Base metal inspected per AWS D1.5-2002 Section 6.19.5 0° UT OK.

WELD IDENTIFICATION 焊缝部件编号	INDICATION NO. 指示号	PROBE ANGLE 探测角度	FROM FACE 检测面	LEG (次数)	DECIBELS分贝				DISCONTINUITY 不连续性					Discontinuity Evaluation 缺陷估计	Remark 备注
					Indication Level	Reference Level	Attenuation Factor	Indication Rating	LOCATION OF DISCONTINUITY 不连续位置(mm)						
					a	b	c	d	Length 长度	Sound Path 声程	Depth from Surface 距表面深度	From'X 距X	From'Y 距Y		
SSD13A-PP065-128	1R1	70				32								ACC.	100%
AFTER B-WR12526															
BLANK															

EXAMINED BY主探 ZhouHaijun 2010.05.02
LEVEL - II SIGN / DATE

REVIEWED BY 审核 SI Wen 2010.05.02
LEVEL - II SIGN / DATE

质量经理 / QCM
签字 SIGN / 日期 DATE

用户CUSTOMER
签字 SIGN / 日期 DATE

(FORM# ZPQC-UT01)

DEPARTMENT OF TRANSPORTATION - District 4 Toll Bridge
333 Burma Road
Oakland CA 94607
Tel: Fax:

NON-CONFORMANCE REPORT TRANSMITTAL

To:	AMERICAN BRIDGE/FLUOR, A JV 375 BURMA ROAD OAKLAND CA 95607	**Date:**	29-Dec-2009
		Contract No:	04-0120F4 04-SF-80-13.2 / 13.9
Dear:	Mr. Charles Kanapicki	**Job Name:**	SAS Superstructure
Attention:	Mr. Thomas Nilsson Project/Fabrication Manager	**Document No:**	05.03.06-000530
Subject:	NCR No. ZPMC-0540		

Reference Description: Missed UT indications by QC on Segment 8CE Deck Panel joint

The attached Non-Conformance Report describes an occurrence where the contractor did not comply with a requirement of the contract document as indicated below:

- ☑ Material or Workmanship not in conformance with contract documents.
- ☑ Quality Control (QC) not performed in conformance with contract documents.
- ☐ Recurring QC issue that constitutes a systematic problem in quality control.
- ☐ Non-Conformance Resolved.

Material Location: OBG **Lift:** 08

Remarks:

During the Quality Assurance Ultrasonic Testing (UT) review of weld located on Segment 8CE, this Quality Assurance Inspector (QA) discovered the following issue:

-One (1) Class "A" indication measuring approximately 40 mm in length.

-The dB rating is +6.

-The weld is identified as SEG048*-005.

-The weld is a Complete Joint Penetration (CJP) butt weld joining Deck Plate DP364A to DP337A.

-The indication is clearly marked by QA on/near the weld.

-OBG Segment 8CE is located in front of blast bay 1.

-This QA generated a TL-6027 UT report for this weld on this date.

The Notice of Witness Inspection Number (NWIT) is 004949. The indication is located inside the area that has been previously tested and accepted by ZPMC Quality Control (QC) personnel. As per the contract documents, ZPMC's QC personnel are required to perform 100% UT inspection of this weld.

Action Required and/or Action Taken:

Submit a repair procedure to the engineer for approval. Ensure that the ZPMC technician that missed this indication is trained and equipped in such a manner as to identify these indications in the future.

Transmitted by: Bill Howe
Attachments: ZPMC-0540

cc: Rick Morrow, Gary Pursell, Peter Siegenthaler, Stanley Ku, Brian Boal, Jason Tom, Contract Files, Ching Chao
File: 05.03.06

STATE OF CALIFORNIA--BUSINESS,TRANSPORTACTION AND HOUSING AGENCY Arnold Schwarzenegger, Governor

DEPARTMENT OF TRANSPORTATION
DIVISION OF ENGINEERING SERVICES
Office of Structural Materials
Quality Assurance and Source Inspection

Bay Area Branch
690 Walnut Ave.St. 150
Vallejo, CA 94592-1133
(707) 649-5453
(707) 649-5493

Contract #: 04-0120F4
Cty: SF/ALA Rte: 80 PM: 13.2/13.9
File #: 69.25B

QUALITY ASSURANCE -- NON-CONFORMANCE REPORT

Location: Changxing Island, Shanghai, P.R. China **Report No:** NCR-000567
Prime Contractor: American Bridge/Fluor Enterprises, a JV **Date:** 28-Dec-2009
Submitting Contractor: Zhenhua Port Machinery Company, Ltd (ZPMC), Changxing Island **NCR #:** ZPMC-0540

Type of problem:

Welding	☐	**Concrete**	☐	**Other**	☑	
Welding	☐	**Curing**	☐	**Procedural**	☐	**Bridge No:** 34-0006
Joint fit-up	☐	**Coating**	☐	**Other**	☑	**Component:** Segment 8CE Deck Plate
Procedural	☐	**Procedural**	☐	**Description:** Missed UT Indication by QC		

Reference Description: Missed UT indications by QC on Segment 8CE Deck Panel joint

Description of Non-Conformance:

During the Quality Assurance Ultrasonic Testing (UT) review of weld located on Segment 8CE, this Quality Assurance Inspector (QA) discovered the following issue:

-One (1) Class "A" indication measuring approximately 40 mm in length.
-The dB rating is +6.
-The weld is identified as SEG048*-005.
-The weld is a Complete Joint Penetration (CJP) butt weld joining Deck Plate DP364A to DP337A.
-The indication is clearly marked by QA on/near the weld.
-OBG Segment 8CE is located in front of blast bay 1.
-This QA generated a TL-6027 UT report for this weld on this date.

The Notice of Witness Inspection Number (NWIT) is 004949. The indication is located inside the area that has been previously tested and accepted by ZPMC Quality Control (QC) personnel. As per the contract documents, ZPMC's QC personnel are required to perform 100% UT inspection of this weld.

Applicable reference:

-AWS D1.5-2002, Section 6, Table 6.3 specifies a class A indication as having a dBs rating of +10 and lower for weld thicknesses 8mm through 20mm.

-Special Provisions Section 8.3: "Quality Control (QC) shall be the responsibility of the Contractor. As a minimum, the Contractor shall perform inspection and testing of each weld joint prior to welding, during welding, and after welding as specified in this section and to ensure that materials and workmanship conform to the requirements of the contract documents."

Who discovered the problem: Chandra Sudalaimuthu
Name of individual from Contractor notified: Wang Chao
Time and method of notification: 1700 hours_12/28/09_Verbal
Name of Caltrans Engineer notified: Bill Howe

QUALITY ASSURANCE -- NON-CONFORMANCE REPORT

(Continued Page 2 of 2)

Time and method of notification: 0900 hours_12/29/09_Verbal

QC Inspector's Name: Wang Weiming

Was QC Inspector aware of the problem: ☐ Yes ☑ No

Contractor's proposal to correct the problem:

N/A

Comments:

This report is for the purpose of determining conformance with the contract documents and is not for the purpose of making repair or fit for purpose recommendations. Should you require recommendations concerning repairs or remedial efforts please contact Mazen Wahbeh, +(86) 134.7247.7571, who represents the Office of Structural Materials for your project.

Inspected By:	Tsang,Eric	SMR
Reviewed By:	Wahbeh,Mazen	SMR

ZPMC	焊缝返修报告 Welding Repair Report			版本 Rev. No. 0
项目名称 Project Name: 美国海湾大桥 SFOBB	部件图号 Drawing No: SEG048*		报告编号 Report No.: B-WR12527	
合同号 Contract No.: 04-0120F4	部件名称 Items Name: 8CE DECK PLATE SPL ICE		NDT报告编号 Report No.of NDT: B787-UT-12601	
项目编号 Project No.: ZP06-787				

焊缝缺陷描述：

Description of welding discontinuity:

Rejected indication found by ultrasonic inspection is less than the maximum allowance aggregate length.

(UT探伤发现的缺陷总长度小于最大允许长度。) SEG048*-005

检验员（Inspector）Zhou Haijun 日期(Date)：2010.04.26

焊缝返修位置示意图：

Draft of welding discontinuity:

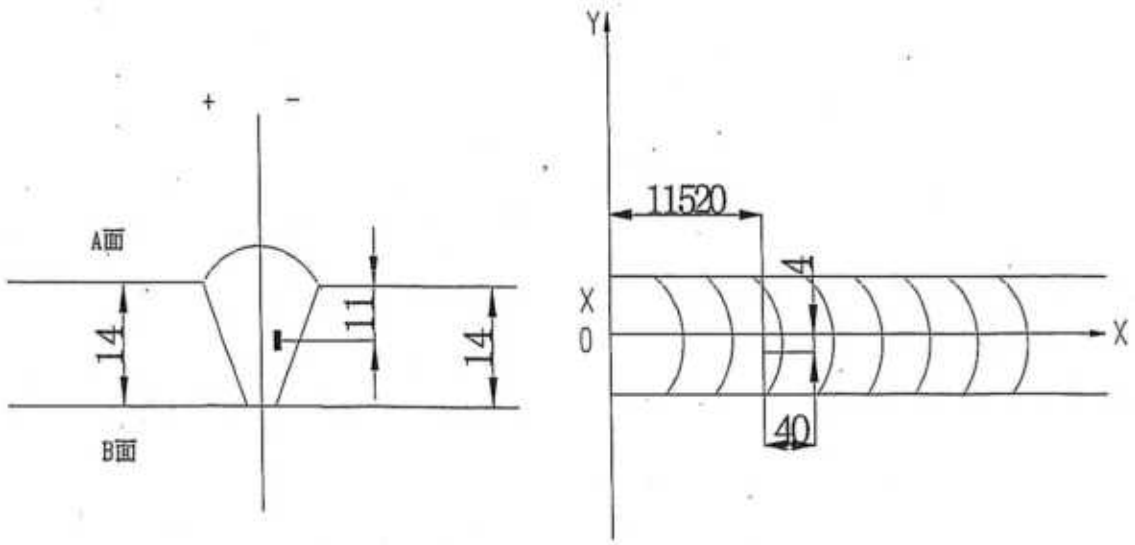

WELD NUMBER: SEG048*-005

产生原因:

Caused:

1、焊道未及时处理干净。

1. Did not clear the weld pass completely in time.

车间负责人(Foreman): 日期(Date): 4.30

处理意见

Disposition :

1. 从缺陷距离端面较近一侧（D≤0.65T, D为缺陷深度，T为板厚）采用碳刨或打磨的方法去除焊缝缺陷;
2. 参照返修焊接工艺规程（WPS）准备正确的接头型式，预热和焊接;
3. 焊前对修补区域进行VT检测保证缺陷完全被清除;
4. 将修补区域打磨到与母材或邻近焊缝平齐;
5. 对焊缝进行UT检测，检测范围为返修区域以及其两端各延长50mm。

1. Gouge or grind from nearer side from metal edge （D≤0.65T, "D" is depth of defects, "T" is thickness of metal） to remove all defects;
2. Follow repair WPS for joint preparation, preheat, and weld deposit;
3. Verify with VT no defects remain in the weld joint prior to welding;
4. Grind the repaired area flush with base metal or the adjacent weld;
5. Perform UT inspection to the weld along with 50mm on each end of the repair area;

工 艺: 审核: 日期 10. 4.30

Technical engineer Approved by Date

焊缝返修报告
Welding Repair Report

版本 Rev. No.
0

项目名称 Project Name	美国海湾大桥 SFOBB	部件图号 Drawing No	SEG048*	报告编号 Report No.	B-WR12527
合同号 Contract No.:	04-0120F4	部件名称 Items Name	8CE DECK PLATE SPLICE	NDT报告编号 Report No.of NDT	B787-UT-12601
项目编号 Project No.:	ZP06-787				

纠正措施:

Correction action to prevent re occurrence:

1.加强焊接监控和道间清理。

1. Improve monitoring of welding and interpass cleaning.

车间负责人(Foreman): Li Zhigang 日期(Date): 4.30

参照的WPS编号 Repair WPS No.	WPS-345-SMAW-1 G(1F)-Repair WPS-345-FCAW-1 G(1F)-Repair-1 WPS-345-SMAW-4 G(4F)-Repair	工艺员 technologist	Hexiaolin 4.30
返修（碳刨）前预热温度 Preheat temperature before gouging	91°C	返修的缺陷 Description of discontinuity	2-F
焊前处理检查 Inspection before welding	ACC	焊前预热温度 Preheat temperature before welding	113°C
最大碳刨深度 Max. depth of gouging	5mm	碳刨总长 Total length of gouging	140mm

焊工 welder	044772	焊接类型 welding type	SMAW	焊接位置 position	4G
焊接电流 Current	141	焊接电压 Voltage	24.1	焊接速度 Speed	130

返修后检查
Inspection After repairing:

外观检查 VT result	ACC	检验员 Inspector	LiYanhua 07170701	日期 Date	2010.05.01
NDT复检 NDT result	ACC	探伤员 NDT person	ZhouHaijun	日期 Date	10.05.01

见证：
Witness/Review:

备注：
Remark：

REPORT OF ULTRASONIC EXAMINATION
UT探伤报告

REPORT NO. 报告编号	DATE	PAGE	Revision No:
B787-UT-12601	2010.04.26	1 OF 1	0

PROJECT NO. :工程编号	CONTRACTOR :
ZP06-787	CALTRANS

ITEMS NAME: 部件名称	DRAWING NO.: 图号	CALTRANS CONTRACT NO.: 加州工程编号
8CE DECK PLATE SPLICE	SEG048*	04-0120F4

REFERENCING CODE 参考规范	ACCEPTANCE STANDARD 接受标准	PROCEDURE NO. 程序编号
AWS D1.5-2002	AWS D1.5-2002(Table 6.3)	ZPQC-UT-01

WELDING PROCESS 焊接方法	JOINT TYPE 焊缝类型	CALIBRATION DUE DATE 仪器校正有效期
SAW	BUTT	Dec. 28ST ,2010

EQUIPMENT 设备	MANUFACTURER 制造商	MODEL NO. 样式编号	SERIAL NO. 序列编号
UT SCOPE	PANAMETRICS	EPOCH-4B	071565311, 061488510, 061495811, 070152011,

CALIBRATION BLOCK 试块	COUPLANT 耦合剂	MATERIAL/THICKNESS 材料厚度	
AWS IIW BLOCK TYPE II	C.M.C	A709M-345T2-X	14mm

TRANSDUCER 探头

MANUFACTURER 制造商	ANGLE 角度	FREQUENCY 频率	SIZE 尺寸	MANUFACTURER 制造商	ANGLE 角度	FREQUENCY 频率	SIZE 尺寸
Changchao	70°	2.5MHz	18×18mm				
Changchao	0°	2.5MHz	20mm	Reference Level 参考灵敏度		20dB	

Base metal inspected per AWS D1.5-2002 Section 6.19.5 0° UT OK.

WELD IDENTIFICATION 焊缝部件编号	INDICATION NO. 指示号	PROBE ANGLE 探测角度	FROM FACE 检测面	LEG (次数)	DECIBELS分贝				DISCONTINUITY 不连续性					Discontinuity Evaluation 缺陷估计	Remark 备注
					Indication Level	Reference Level	Attenuation Factor	Indication Rating	LOCATION OF DISCONTINUITY 不连续位置(mm)						
					a	b	c	d	Length 长度	Sound Path 声程	Depth from Surface 距表面深度	From'X 距X	From'Y 距Y		
SEG048*-005	1	70	A	1	39	32	1	+6	40	32	11	-4	11520	REJ.	100%
BLANK															

EXAMINED BY主探	REVIEWED BY 审核
Zhou Kejun 10.04.26	Sunwei 10.04.26
LEVEL - II SIGN / DATE	LEVEL - II SIGN / DATE
质量受理 / QCM	用户CUSTOMER
签字 SIGN / 日期 DATE	签字 SIGN / 日期 DATE

(FORM# ZPQC-UT01)

REPORT OF ULTRASONIC EXAMINATION
UT探伤报告

REPORT NO. 报告编号 B787-UT-12601R1	DATE 2010.05.02	PAGE 1 OF 1	Revision No: 0

PROJECT NO. :工程编号 ZP06-787		CONTRACTOR : CALTRANS
ITEMS NAME: 部件名称 8CE DECK PLATE SPLICE	DRAWING NO.: 图号 SEG048*	CALTRANS CONTRACT NO.: 04-0120F4 加州工程编号

REFERENCING CODE 参考规范	ACCEPTANCE STANDARD 接受标准	PROCEDURE NO. 程序编号
AWS D1.5-2002	AWS D1.5-2002(Table 6.3)	ZPQC-UT-01
WELDING PROCESS 焊接方法	JOINT TYPE 焊缝类型	CALIBRATION DUE DATE 仪器校正有效期
SMAW	BUTT	Dec. 28ST ,2010

EQUIPMENT 设备	MANUFACTURER 制造商	MODEL NO. 样式编号	SERIAL NO. 序列编号
UT SCOPE	PANAMETRICS	EPOCH-4B	071565311, 061488510, 061495811, 070152011,

CALIBRATION BLOCK 试块	COUPLANT 耦合剂	MATERIAL/THICKNESS 材料厚度
AWS IIW BLOCK TYPE II	C.M.C	A709M-345T2-X 14mm

TRANSDUCER 探头

MANUFACTURER 制造商	ANGLE 角度	FREQUENCY 频率	SIZE 尺寸	MANUFACTURER 制造商	ANGLE 角度	FREQUENCY 频率	SIZE 尺寸
Changchao	70°	2.5MHz	18×18mm				
Changchao	0°	2.5MHz	20mm	Reference Level 参考灵敏度		20dB	

Base metal inspected per AWS D1.5-2002 Section 6.19.5 0° UT OK.

WELD IDENTIFICATION 焊缝部件编号	INDICATION NO. 指示号	PROBE ANGLE 探测角度	FROM FACE 检测面	LEG (次数)	DECIBELS分贝				DISCONTINUITY 不连续性					Discontinuity Evaluation 缺陷估计	Remark 备注
					Indication Level	Reference Level	Attenuation Factor	Indication Rating	LOCATION OF DISCONTINUITY 不连续位置(mm)						
					a	b	c	d	Length 长度	Sound Path 声程	Depth from Surface 距表面深度	From'X 距X	From'Y 距Y		
SEG048*-005	1R1	70				32								ACC.	100%
AFTER B-WR12527															
BLANK															

EXAMINED BY主探	REVIEWED BY 审核
Zhou Haijun 20/0.05.02	SU Wei 20/0.05.02
LEVEL - II SIGN / DATE	LEVEL - II SIGN / DATE
质量经理 / QCM	用户CUSTOMER
签字 SIGN / 日期 DATE	签字 SIGN / 日期 DATE

(FORM# ZPQC-UT01)

DEPARTMENT OF TRANSPORTATION - District 4 Toll Bridge
333 Burma Road
Oakland CA 94607
Tel: Fax:

NON-CONFORMANCE REPORT TRANSMITTAL

To:	AMERICAN BRIDGE/FLUOR, A JV 375 BURMA ROAD OAKLAND CA 95607	**Date:**	30-Dec-2009
		Contract No:	04-0120F4 04-SF-80-13.2 / 13.9
Dear:	Mr. Charles Kanapicki	**Job Name:**	SAS Superstructure
Attention:	Mr. Thomas Nilsson Project/Fabrication Manager	**Document No:**	05.03.06-000533
Subject:	NCR No. ZPMC-0543		

Reference Description: Missed UT indications by QC on Segment 8CW Side to Edge Plate Joint

The attached Non-Conformance Report describes an occurrence where the contractor did not comply with a requirement of the contract document as indicated below:

- ☑ Material or Workmanship not in conformance with contract documents.
- ☑ Quality Control (QC) not performed in conformance with contract documents.
- ☐ Recurring QC issue that constitutes a systematic problem in quality control.
- ☐ Non-Conformance Resolved.

Material Location: OBG **Lift:** 08

Remarks:

During the Quality Assurance Ultrasonic Testing (UT) review of welds located on Orthotropic Box Girder (OBG) segment 8CW, this Quality Assurance Inspector (QA) discovered the following issues:

-One (1) class "A" longitudinal linear indication measuring approximately 30mm in length.

-The indication dBs rating is a +7.

-Material thickness is 18mm.

-The depth of the indication is approximately 14mm.

-The weld is identified as CA053-003.

-The weld is designated as Seismic Performance Critical Material (SPCM).

-The indication is clearly marked on or near the weld.

-The weld is a Complete Joint Penetration (CJP) corner joint joining Side Plate SP436A (SPCM) to Edge Plate EP64A (SPCM).

-Segment 8CW is located in front of blast bay 1.

The Notice of Witness Inspection (NWIT) No. is 004949. The indication is located in an area previously tested and accepted by ZPMC Quality Control (QC) personnel. As per the contract documents, ZPMCs QC personnel are required to perform 100% UT inspection of this weld.

Action Required and/or Action Taken:

Submit a repair procedure to the engineer for approval. Ensure the UT technician is adequately equipped and trained to locate such indications in the future.

Transmitted by: Bill Howe

Attachments: ZPMC-0543

cc: Rick Morrow, Gary Pursell, Peter Siegenthaler, Stanley Ku, Brian Boal, Jason Tom, Contract Files, Ching Chao

02.02:15.04 *05.03.06-000533.NCT*

Received
NCT-000533 30 Dec 09

File: 05.03.06

STATE OF CALIFORNIA--BUSINESS,TRANSPORTACTION AND HOUSING AGENCY Arnold Schwarzenegger, Governor

DEPARTMENT OF TRANSPORTATION
DIVISION OF ENGINEERING SERVICES
Office of Structural Materials
Quality Assurance and Source Inspection

Bay Area Branch
690 Walnut Ave.St. 150
Vallejo, CA 94592-1133
(707) 649-5453
(707) 649-5493

Contract #: 04-0120F4
Cty: SF/ALA Rte: 80 PM: 13.2/13.9
File #: 69.25B

QUALITY ASSURANCE -- NON-CONFORMANCE REPORT

Location: Changxing Island, Shanghai, P.R. China **Report No:** NCR-000570
Prime Contractor: American Bridge/Fluor Enterprises, a JV **Date:** 29-Dec-2009
Submitting Contractor: Zhenhua Port Machinery Company, Ltd (ZPMC), Changxing Island **NCR #:** ZPMC-0543

Type of problem:

Welding	☐	**Concrete**	☐	**Other**	☑	
Welding	☐	**Curing**	☐	**Procedural**	☐	**Bridge No:** 34-0006
Joint fit-up	☐	**Coating**	☐	**Other**	☑	**Component:** Segment 8CW Side to Edge Plate
Procedural	☐	**Procedural**	☐	**Description:** Missed UT Indication by QC		

Reference Description: Missed UT indications by QC on Segment 8CW Side to Edge Plate Joint

Description of Non-Conformance:

During the Quality Assurance Ultrasonic Testing (UT) review of welds located on Orthotropic Box Girder (OBG) segment 8CW, this Quality Assurance Inspector (QA) discovered the following issues:

-One (1) class "A" longitudinal linear indication measuring approximately 30mm in length.
-The indication dBs rating is a +7.
-Material thickness is 18mm.
-The depth of the indication is approximately 14mm.
-The weld is identified as CA053-003.
-The weld is designated as Seismic Performance Critical Material (SPCM).
-The indication is clearly marked on or near the weld.
-The weld is a Complete Joint Penetration (CJP) corner joint joining Side Plate SP436A (SPCM) to Edge Plate EP64A (SPCM).
-Segment 8CW is located in front of blast bay 1.

The Notice of Witness Inspection (NWIT) No. is 004949. The indication is located in an area previously tested and accepted by ZPMC Quality Control (QC) personnel. As per the contract documents, ZPMCs QC personnel are required to perform 100% UT inspection of this weld.

Applicable reference:

AWS D1.5-02 Section 6; Table 6.3 specifies a class A indication as having a rating of 10dBs and under for material thicknesses 8mm through 20mm.

Special Provisions Section 8.3; "Quality Control (QC) shall be the responsibility of the Contractor. As a minimum, the Contractor shall perform inspection and testing of each weld joint prior to welding, during welding, and after welding as specified in this section and to ensure that materials and workmanship conform to the requirements of the contract documents."

Who discovered the problem: Subhasis Bera

QUALITY ASSURANCE -- NON-CONFORMANCE REPORT

(Continued Page 2 of 2)

Name of individual from Contractor notified: Peter Shaw
Time and method of notification: 1330 hours, 12-29-09, Verbal
Name of Caltrans Engineer notified: Bill Howe
Time and method of notification: 1930 hours, 12-29-09, Email
QC Inspector's Name: Wang Lu
Was QC Inspector aware of the problem: ☐ **Yes** ☑ **No**
Contractor's proposal to correct the problem:
N/A
Comments:
This report is for the purpose of determining conformance with the contract documents and is not for the purpose of making repair or fit for purpose recommendations. Should you require recommendations concerning repairs or remedial efforts please contact Mazen Wahbeh, +(86) 134.7247.7571, who represents the Office of Structural Materials for your project.

Inspected By:	Tsang,Eric	SMR
Reviewed By:	Wahbeh,Mazen	SMR

焊缝返修报告
Welding Repair Report

				版本 Rev. No.	0
项目名称 Project Name	美国海湾大桥 SFOBB	部件图号 Drawing No	CA53	报告编号 Report No.	B-WR12525
合同号 Contract No.:	04-0120F4	部件名称 Items Name	8CW CORNER ASSEMBLY	NDT报告编号 Report No.of NDT	B787-UT-12599
项目编号 Project No.:	ZP06-787				

焊缝缺陷描述：

Description of welding discontinuity:

Rejected indication found by ultrasonic inspection is less than the maximum allowance aggregate length.

(UT探伤发现的缺陷总长度小于最大允许长度。) CA053-003

Zhou Haijun

检验员 (Inspector) Zhou Haijun 日期(Date)： 2010.04.26

焊缝返修位置示意图：

Draft of welding discontinuity:

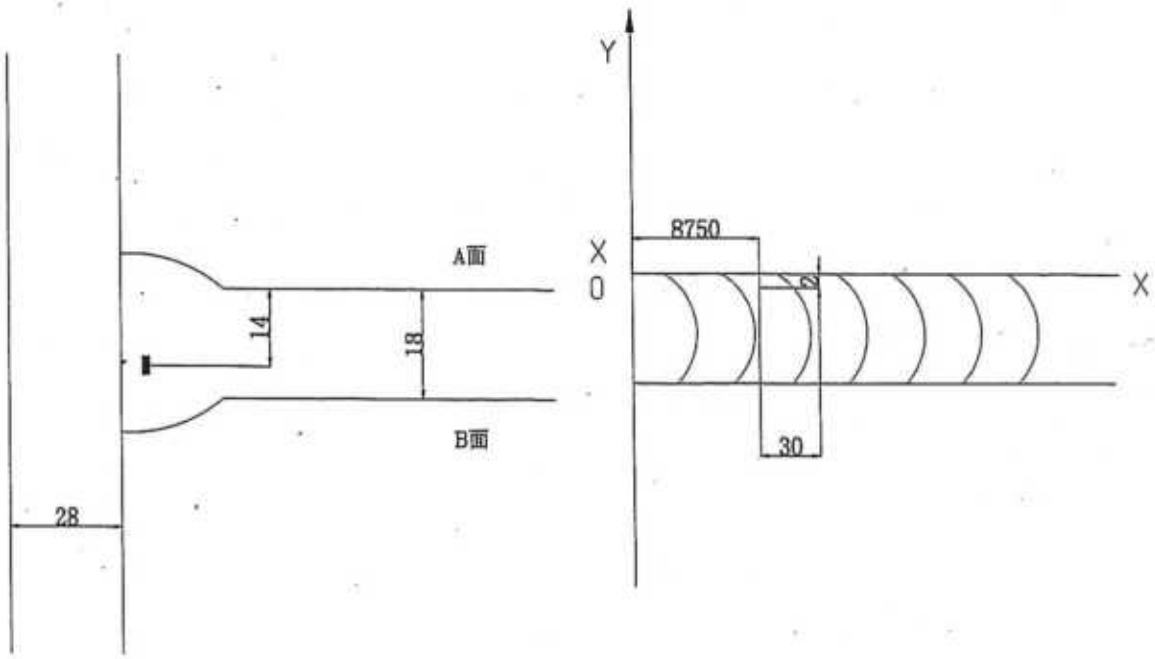

WELD NUMBER: CA053-003

产生原因:

Caused:

1、焊道未及时处理干净。

1. Did not clear the weld pass completely in time.

车间负责人(Foreman): Li Zhigang 日期(Date): 4.30

处理意见

Disposition：

1. 从缺陷距离端面较近一侧（D≤0.65T, D为缺陷深度，T为板厚）采用碳刨或打磨的方法去除焊缝缺陷;
2. 参照返修焊接工艺规程（WPS）准备正确的接头型式，预热和焊接;
3. 焊前对修补区域进行VT检测保证缺陷完全被清除;
4. 将修补区域打磨到与母材或邻近焊缝平齐;
5. 对焊缝进行UT检测，检测范围为返修区域以及其两端各延长50mm。

1. Gouge or grind from nearer side from metal edge （D≤0.65T, "D" is depth of defects, "T" is thickness of metal） to remove all defects;
2. Follow repair WPS for joint preparation, preheat, and weld deposit;
3. Verify with VT no defects remain in the weld joint prior to welding;
4. Grind the repaired area flush with base metal or the adjacent weld;
5. Perform UT inspection to the weld along with 50mm on each end of the repair area;

工 艺: Technical engineer

审核: Approved by

日期 Date: 4.30

焊缝返修报告
Welding Repair Report

ZPMC		版本 Rev. No.
		0

项目名称 Project Name	美国海湾大桥 SFOBB	部件图号 Drawing No	CA53	报告编号 Report No.	B-WR12525
合同号 Contract No.:	04-0120F4	部件名称 Items Name	8CW CORNER ASSEMBLY	NDT报告编号 Report No.of NDT	B787-UT-12599
项目编号 Project No.:	ZP06-787				

纠正措施:

Correction action to prevent re occurrence:

1.加强焊接监控和道间清理。

1. Improve monitoring of welding and interpass cleaning.

车间负责人(Foreman): Li Hai gang 日期(Date): 4.30

参照的WPS编号 Repair WPS No.	WPS-345-SMAW-2 G(2F)-FCM-Repair WPS-345-FCAW-2 G(2F)-FCM-Repair WPS-345-SMAW-4 G(4F)-FCM-Repair	工艺员 technologist	Hexiaolin 4.30
返修（碳刨）前预热温度 Preheat temperature before gouging	78°C	返修的缺陷 Description of discontinuity	I-F
焊前处理检查 Inspection before welding	ACC	焊前预热温度 Preheat temperature before welding	98°C
最大碳刨深度 Max. depth of gouging	6mm	碳刨总长 Total length of gouging	130mm

焊工 welder	044772	焊接类型 welding type	SMAW	焊接位置 position	4G
焊接电流 Current	146	焊接电压 Voltage	24-3	焊接速度 Speed	178

返修后检查
Inspection After repairing:

外观检查 VT result	ACC	检验员 Inspector	Liyanhua 0712701	日期 Date	20.05.01
NDT复检 NDT result	ACC	探伤员 NDT person	Zhou Heijun	日期 Date	10.05.02

见证：
Witness/Review:

备注：
Remark：

REPORT OF ULTRASONIC EXAMINATION
UT探伤报告

REPORT NO. 报告编号 B787-UT-12599	DATE 2010.04.26	PAGE 1 OF 1	Revision No: 0

PROJECT NO. :工程编号 ZP06-787		CONTRACTOR : CALTRANS
ITEMS NAME: 部件名称 8CW CORNER ASSEMBLY	DRAWING NO.: 图号 CA53	CALTRANS CONTRACT NO.: 04-0120F4 加州工程编号

REFERENCING CODE 参考规范	ACCEPTANCE STANDARD 接受标准	PROCEDURE NO. 程序编号
AWS D1.5-2002	AWS D1.5-2002(Table 6.3)	ZPQC-UT-01
WELDING PROCESS 焊接方法	JOINT TYPE 焊缝类型	CALIBRATION DUE DATE 仪器校正有效期
FCAW	T-JOINT	Dec. 28ST ,2010

EQUIPMENT 设备	MANUFACTURER 制造商	MODEL NO. 样式编号	SERIAL NO. 序列编号
UT SCOPE	PANAMETRICS	EPOCH-4B	071565311, 061488510, 061495811, 070152011,

CALIBRATION BLOCK 试块	COUPLANT 耦合剂	MATERIAL/THICKNESS 材料厚度
AWS IIW BLOCK TYPE II	C.M.C	A709M-345T2-X 18/28mm

TRANSDUCER 探头

MANUFACTURER 制造商	ANGLE 角度	FREQUENCY 频率	SIZE 尺寸	MANUFACTURER 制造商	ANGLE 角度	FREQUENCY 频率	SIZE 尺寸
Changchao	70°	2.5MHz	18×18mm				
Changchao	0°	2.5MHz	20mm	Reference Level 参考灵敏度		20dB	

Base metal inspected per AWS D1.5-2002 Section 6.19.5 0° UT OK.

WELD IDENTIFICATION 焊缝部件编号	INDICATION NO. 指示号	PROBE ANGLE 探测角度	FROM FACE 检测面	LEG (次数)	DECIBELS分贝				DISCONTINUITY 不连续性					Discontinuity Evaluation 缺陷估计	Remark 备注
					Indication Level	Reference Level	Attenuation Factor	Indication Rating	LOCATION OF DISCONTINUITY 不连续位置(mm)						
					a	b	c	d	Length 长度	Sound Path 声程	Depth from Surface 距表面深度	From"X 距X	From"Y 距Y		
CA053-003	1	70	A	1	41	32	2	+7	30	42	14	-2	8750	REJ.	100%
BLANK															

EXAMINED BY主探 Zhou Hongjun 10.04.28	REVIEWED BY 审核 Suwei 10.04.28
LEVEL - II SIGN / DATE	LEVEL - II SIGN / DATE
质量经理 / QCM	用户CUSTOMER
签字 SIGN / 日期 DATE	签字 SIGN / 日期 DATE

(FORM# ZPQC-UT01)

REPORT OF ULTRASONIC EXAMINATION
UT探伤报告

REPORT NO. 报告编号 B787-UT-12599R1	DATE 2010.05.02	PAGE 1 OF 1	Revision No: 0

PROJECT NO. :工程编号 ZP06-787		CONTRACTOR : CALTRANS
ITEMS NAME: 部件名称 8CW CORNER ASSEMBLY	DRAWING NO.: 图号 CA53	CALTRANS CONTRACT NO.: 04-0120F4 加州工程编号

REFERENCING CODE 参考规范	ACCEPTANCE STANDARD 接受标准	PROCEDURE NO. 程序编号
AWS D1.5-2002	AWS D1.5-2002(Table 6.3)	ZPQC-UT-01
WELDING PROCESS 焊接方法	JOINT TYPE 焊缝类型	CALIBRATION DUE DATE 仪器校正有效期
SMAW	T-JOINT	Dec. 28ST ,2010

EQUIPMENT 设备	MANUFACTURER 制造商	MODEL NO. 样式编号	SERIAL NO. 序列编号
UT SCOPE	PANAMETRICS	EPOCH-4B	071565311, 061488510, 061495811, 070152011,

CALIBRATION BLOCK 试块	COUPLANT 耦合剂	MATERIAL/THICKNESS 材料厚度
AWS IIW BLOCK TYPE II	C.M.C	A709M-345T2-X 18/28mm

TRANSDUCER 探头

MANUFACTURER 制造商	ANGLE 角度	FREQUENCY 频率	SIZE 尺寸	MANUFACTURER 制造商	ANGLE 角度	FREQUENCY 频率	SIZE 尺寸
Changchao	70°	2.5MHz	18×18mm				
Changchao	0°	2.5MHz	20mm	Reference Level 参考灵敏度		20dB	

Base metal Inspected per AWS D1.5-2002 Section 6.19.5 0° UT OK.

WELD IDENTIFICATION 焊缝部件编号	INDICATION NO. 指示号	PROBE ANGLE 探测角度	FROM FACE 检测面	LEG (次数)	DECIBELS分贝				DISCONTINUITY 不连续性					Discontinuity Evaluation 缺陷估计	Remark 备注
					Indication Level	Reference Level	Attenuation Factor	Indication Rating	LOCATION OF DISCONTINUITY 不连续位置(mm)						
					a	b	c	d	Length 长度	Sound Path 声程	Depth from Surface 距表面深度	From'X 距X	From'Y 距Y		
CA053-003	1R1	70				32								ACC.	100%
AFTER B-WR12525															
BLANK															

EXAMINED BY主探 Zhou Hai jun 2010.05.02
LEVEL - II SIGN / DATE

REVIEWED BY 审核 SU Wei 2010.05.07
LEVEL - II SIGN / DATE

质量经理 / QCM
签字 SIGN / 日期 DATE

用户CUSTOMER
签字 SIGN / 日期 DATE

(FORM# ZPQC-UT01)

DEPARTMENT OF TRANSPORTATION - District 4 Toll Bridge
333 Burma Road
Oakland CA 94607
Tel: Fax:

NON-CONFORMANCE REPORT TRANSMITTAL

To:	AMERICAN BRIDGE/FLUOR, A JV 375 BURMA ROAD OAKLAND CA 95607	**Date:**	30-Dec-2009
		Contract No:	04-0120F4 04-SF-80-13.2 / 13.9
Dear:	Mr. Charles Kanapicki	**Job Name:**	SAS Superstructure
Attention:	Mr. Thomas Nilsson Project/Fabrication Manager	**Document No:**	05.03.06-000534
Subject:	NCR No. ZPMC-0544		

Reference Description: Missed UT indications by QC on Side Plate of Segment 8CW

The attached Non-Conformance Report describes an occurrence where the contractor did not comply with a requirement of the contract document as indicated below:

- ☑ Material or Workmanship not in conformance with contract documents.
- ☑ Quality Control (QC) not performed in conformance with contract documents.
- ☐ Recurring QC issue that constitutes a systematic problem in quality control.
- ☐ Non-Conformance Resolved.

Material Location: OBG **Lift:** 08

Remarks:

During the Quality Assurance Ultrasonic Testing (UT) review of Seismic Performance Critical Material (SPCM) welds located in Orthotropic Box Girder (OBG) segment 8CW, this Quality Assurance Inspector (QA) discovered the following issues:
-Two (2) class "A" longitudinal linear indications measuring approximately 6mm and 10mm in length.
Indication #1 is located in weld identified as SEG047B-012.

-The indication dBs rating is a +10.
-Material thickness is 16mm.
-The depth of the indication is approximately 4mm.
-The weld is designated as Seismic Performance Critical Material (SPCM).
-The indication is clearly marked on or near the weld.
-The weld is a Complete Joint Penetration (CJP) butt joint joining Side Plate SP767A (SPCM) to SP727A (SPCM).
Indication #2 is located in weld identified as SEG047B-013.

-The indication dBs rating is a +9.
-Material thickness is 16mm.
-The depth of the indication is approximately 7mm.
-The weld is designated as Seismic Performance Critical Material (SPCM).
-The indication is clearly marked on or near the weld.
-The weld is a Complete Joint Penetration (CJP) butt joint joining Side Plate SP727A (SPCM) to SP489A (SPCM).
-Segment 8CW is located in front of blast bay 1.

The Notice of Witness Inspection (NWIT) No. is 004949. The indications are located in areas previously tested and accepted by ZPMC Quality Control (QC) personnel. As per the contract documents, ZPMCs QC personnel are required to perform 100% UT inspection of these welds.

NCT

(Continued Page 2 of 2)

Action Required and/or Action Taken:

Submit a repair procedure to the engineer for approval. Provide training and equipment to the UT technician to ensure these types of indications are not missed.

Transmitted by: Bill Howe Sr. Transportation Engineer

Attachments: ZPMC-0544

cc: Rick Morrow, Gary Pursell, Peter Siegenthaler, Stanley Ku, Brian Boal, Jason Tom, Contract Files, Ching Chao

File: 05.03.06

DEPARTMENT OF TRANSPORTATION
DIVISION OF ENGINEERING SERVICES
Office of Structural Materials
Quality Assurance and Source Inspection

Bay Area Branch
690 Walnut Ave.St. 150
Vallejo, CA 94592-1133
(707) 649-5453
(707) 649-5493

Contract #: 04-0120F4
Cty: SF/ALA Rte: 80 PM: 13.2/13.9
File #: 69.25B

QUALITY ASSURANCE -- NON-CONFORMANCE REPORT

Location: Changxing Island, Shanghai, P.R. China **Report No:** NCR-000571
Prime Contractor: American Bridge/Fluor Enterprises, a JV **Date:** 30-Dec-2009
Submitting Contractor: Zhenhua Port Machinery Company, Ltd (ZPMC), Changxing Island **NCR #:** ZPMC-0544

Type of problem:

Welding	☐	**Concrete**	☐	**Other**	☑	
Welding	☐	**Curing**	☐	**Procedural**	☐	**Bridge No:** 34-0006
Joint fit-up	☐	**Coating**	☐	**Other**	☑	**Component:** OBG Segment 8CW Side Plate
Procedural	☐	**Procedural**	☐	**Description:** Missed UT Indication by QC		

Reference Description: Missed UT indications by QC on Side Plate of Segment 8CW

Description of Non-Conformance:

During the Quality Assurance Ultrasonic Testing (UT) review of Seismic Performance Critical Material (SPCM) welds located in Orthotropic Box Girder (OBG) segment 8CW, this Quality Assurance Inspector (QA) discovered the following issues:

-Two (2) class "A" longitudinal linear indications measuring approximately 6mm and 10mm in length. Indication #1 is located in weld identified as SEG047B-012.

-The indication dBs rating is a +10.
-Material thickness is 16mm.
-The depth of the indication is approximately 4mm.
-The weld is designated as Seismic Performance Critical Material (SPCM).
-The indication is clearly marked on or near the weld.
-The weld is a Complete Joint Penetration (CJP) butt joint joining Side Plate SP767A (SPCM) to SP727A (SPCM).

Indication #2 is located in weld identified as SEG047B-013.

-The indication dBs rating is a +9.
-Material thickness is 16mm.
-The depth of the indication is approximately 7mm.
-The weld is designated as Seismic Performance Critical Material (SPCM).
-The indication is clearly marked on or near the weld.
-The weld is a Complete Joint Penetration (CJP) butt joint joining Side Plate SP727A (SPCM) to SP489A (SPCM).
-Segment 8CW is located in front of blast bay 1.

The Notice of Witness Inspection (NWIT) No. is 004949. The indications are located in areas previously tested

QUALITY ASSURANCE -- NON-CONFORMANCE REPORT

(Continued Page 2 of 2)

and accepted by ZPMC Quality Control (QC) personnel. As per the contract documents, ZPMCs QC personnel are required to perform 100% UT inspection of these welds.

Applicable reference:

AWS D1.5-02 Section 6; Table 6.3 specifies a class A indication as having a rating of 10dbs and under for material thicknesses 8mm through 20mm.

Special Provisions Section 8.3; "Quality Control (QC) shall be the responsibility of the Contractor. As a minimum, the Contractor shall perform inspection and testing of each weld joint prior to welding, during welding, and after welding as specified in this section and to ensure that materials and workmanship conform to the requirements of the contract documents."

Who discovered the problem: Surendra Prabhu

Name of individual from Contractor notified: Peter Shaw

Time and method of notification: 0930 hours, 12-30-09, Email

Name of Caltrans Engineer notified: Bill Howe

Time and method of notification: 1115 hours, 12-30-09, Verbal

QC Inspector's Name: Wang Lu

Was QC Inspector aware of the problem: ☐ **Yes** ☑ **No**

Contractor's proposal to correct the problem:

N/A

Comments:

This report is for the purpose of determining conformance with the contract documents and is not for the purpose of making repair or fit for purpose recommendations. Should you require recommendations concerning repairs or remedial efforts please contact Mazen Wahbeh, +(86) 134.7247.7571, who represents the Office of Structural Materials for your project.

Inspected By:	Tsang,Eric	SMR
Reviewed By:	Wahbeh,Mazen	SMR

26 #44772 43661

ZPMC	焊缝返修报告 Welding Repair Report				版本 Rev. No. 0
项目名称 Project Name	美国海湾大桥 SFOBB	部件图号 Drawing No	SEG047B	报告编号 Report No.	B-WR12523
合同号 Contract No.:	04-0120F4	部件名称 Items Name	8CW BOTTOM PLATE SPLICE	NDT报告编号 Report No.of NDT	B787-UT-12598
项目编号 Project No.:	ZP06-787				

焊缝缺陷描述：

Description of welding discontinuity:

Rejected indication found by ultrasonic inspection is less than the maximum allowance aggregate length.

(UT探伤发现的缺陷总长度小于最大允许长度。) SEG047B-012

检验员（Inspector）Zhou Haijun 日期(Date)：2010.04.26

焊缝返修位置示意图：

Draft of welding discontinuity:

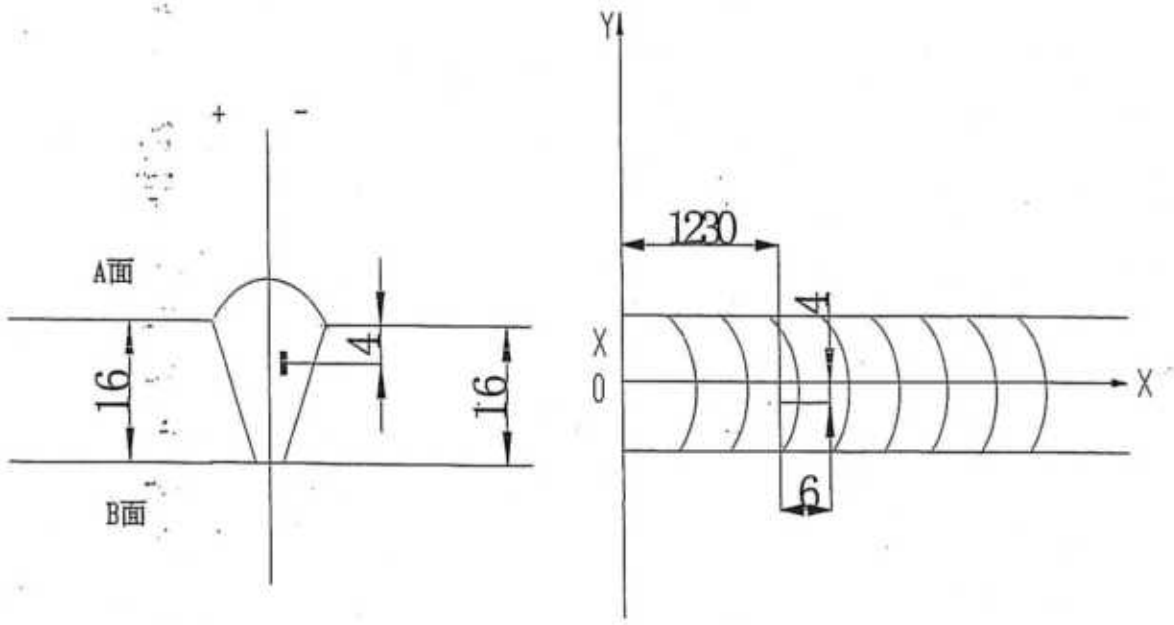

WELD NUMBER: SEG047B-012

产生原因:

Caused:

1、焊道未及时处理干净。

1. Did not clear the weld pass completely in time.

车间负责人(Foreman): Lihaigang 日期(Date): 4-30

处理意见

Disposition :

1. 从缺陷距离端面较近一侧（D≤0.65T, D为缺陷深度，T为板厚）采用碳刨或打磨的方法去除焊缝缺陷;
2. 参照返修焊接工艺规程（WPS）准备正确的接头型式，预热和焊接;
3. 焊前对修补区域进行VT检测保证缺陷完全被清除;
4. 将修补区域打磨到与母材或邻近焊缝平齐;
5. 对焊缝进行UT检测，检测范围为返修区域以及其两端各延长50mm。

1. Gouge or grind from nearer side from metal edge （D≤0.65T, "D" is depth of defects, "T" is thickness of metal） to remove all defects;
2. Follow repair WPS for joint preparation, preheat, and weld deposit;
3. Verify with VT no defects remain in the weld joint prior to welding;
4. Grind the repaired area flush with base metal or the adjacent weld;
5. Perform UT inspection to the weld along with 50mm on each end of the repair area;

工 艺: Hefeilin. 审核: 日期 10.4.30

Technical engineer Approved by Date

焊缝返修报告
Welding Repair Report

ZPMC

版本 Rev. No.
0

项目名称 Project Name	美国海湾大桥 SFOBB	部件图号 Drawing No	SEG047B	报告编号 Report No.	B-WR12523
合同号 Contract No.:	04-0120F4	部件名称 Items Name	8CW BOTTOM PLATE SPLICE	NDT报告编号 Report No.of NDT	B787-UT-12598
项目编号 Project No.:	ZP06-787				

纠正措施:

Correction action to prevent re occurrence:

1.加强焊接监控和道间清理。

1. Improve monitoring of welding and interpass cleaning.

车间负责人(Foreman): Li Zhigang 日期(Date): 4.30

参照的WPS编号 Repair WPS No.	WPS-345-SMAW-1 G(1F)-Repair WPS-345-FCAW-1 G(1F)-Repair-1 WPS-345-SMAW-4 G(4F)-Repair	工艺员 technologist	He Xiaolin 4.30
返修（碳刨）前预热温度 Preheat temperature before gouging	86°C	返修的缺陷 Description of discontinuity	ZP
焊前处理检查 Inspection before welding	Acc	焊前预热温度 Preheat temperature before welding	109°C
最大碳刨深度 Max. depth of gouging	6mm	碳刨总长 Total length of gouging	106mm

焊工 welder	044772	焊接类型 welding type	SMAW	焊接位置 position	2G
焊接电流 Current	172	焊接电压 Voltage	25-1	焊接速度 Speed	158

返修后检查
Inspection After repairing:

外观检查 VT result	Acc	检验员 Inspector	Liyanhua 0712091	日期 Date	2010.05.01
NDT复检 NDT result	Acc	探伤员 NDT person	Zhou Haijun	日期 Date	10.05.02

见证：
Witness/Review:

备注：
Remark：

焊缝返修报告
Welding Repair Report

				版本 Rev. No.	0
项目名称 Project Name	美国海湾大桥 SFOBB	部件图号 Drawing No	SEG047B	报告编号 Report No.	B-WR12524
合同号 Contract No.:	04-0120F4	部件名称 Items Name	8CW BOTTOM PLATE SPLICE	NDT报告编号 Report No.of NDT	B787-UT-12598
项目编号 Project No.:	ZP06-787				

焊缝缺陷描述：

Description of welding discontinuity:

Rejected indication found by ultrasonic inspection is less than the maximum allowance aggregate length.

(UT探伤发现的缺陷总长度小于最大允许长度。) SEG047B-013

Zhou Haijun

检验员 (Inspector) Zhou Haijun 日期(Date)： 2010.04.26

焊缝返修位置示意图：

Draft of welding discontinuity:

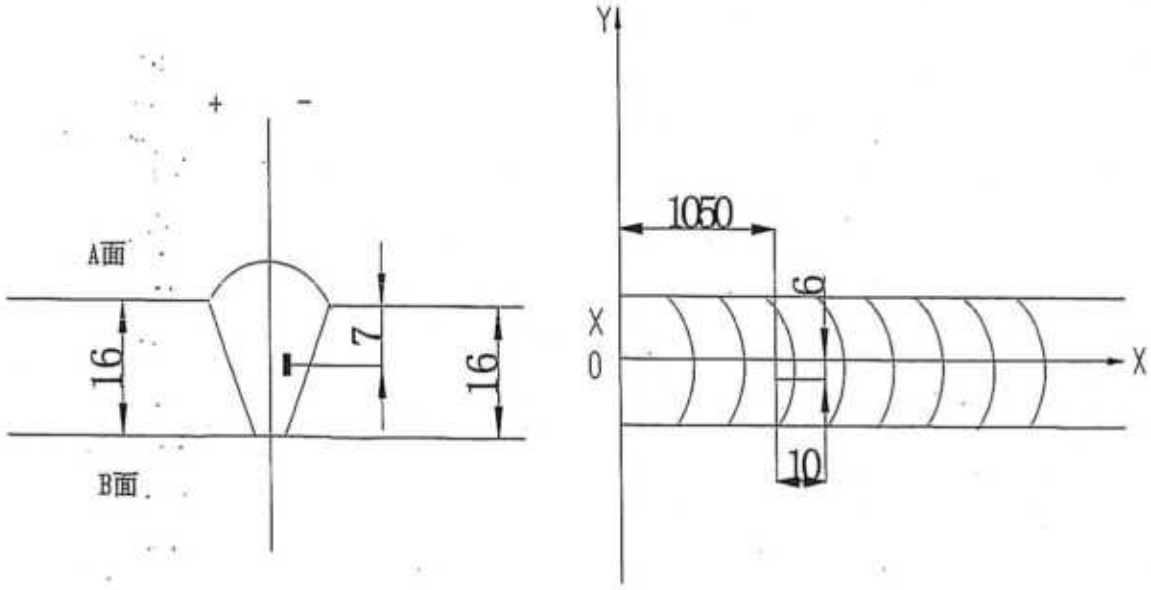

WELD NUMBER: SEG047B-013

产生原因:

Caused:

1、焊道未及时处理干净。

1. Did not clear the weld pass completely in time.

车间负责人(Foreman): Li Hongang 日期(Date): 4.30

处理意见

Disposition :

1. 从缺陷距离端面较近一侧（D≤0.65T, D为缺陷深度，T为板厚）采用碳刨或打磨的方法去除焊缝缺陷;
2. 参照返修焊接工艺规程（WPS）准备正确的接头型式，预热和焊接;
3. 焊前对修补区域进行VT检测保证缺陷完全被清除;
4. 将修补区域打磨到与母材或邻近焊缝平齐;
5. 对焊缝进行UT检测，检测范围为返修区域以及其两端各延长50mm。

1. Gouge or grind from nearer side from metal edge （D≤0.65T, "D" is depth of defects, "T" is thickness of metal） to remove all defects;
2. Follow repair WPS for joint preparation, preheat, and weld deposit;
3. Verify with VT no defects remain in the weld joint prior to welding;
4. Grind the repaired area flush with base metal or the adjacent weld;
5. Perform UT inspection to the weld along with 50mm on each end of the repair area;

工 艺 Technical engineer

审核: Approved by

日期 Date 10.4.30

焊缝返修报告
Welding Repair Report

版本 Rev. No.
0

项目名称 Project Name	美国海湾大桥 SFOBB	部件图号 Drawing No	SEG047B	报告编号 Report No.	B-WR12524
合同号 Contract No.:	04-0120F4	部件名称 Items Name	8CW BOTTOM PLATE SPLICE	NDT报告编号 Report No.of NDT	B787-UT-12598
项目编号 Project No.:	ZP06-787				

纠正措施:

Correction action to prevent re occurrence:

1.加强焊接监控和道间清理。

1. Improve monitoring of welding and interpass cleaning.

车间负责人(Foreman): Lizhigang 日期(Date): 4.30

参照的WPS编号 Repair WPS No.	WPS-345-SMAW-1 G(1F)-Repair WPS-345-FCAW-1 G(1F)-Repair-1 WPS-345-SMAW-4 G(4F)-Repair	工艺员 technologist	Hexiaolin 4.30.
返修（碳刨）前预热温度 Preheat temperature before gouging	72°C	返修的缺陷 Description of discontinuity	ZF
焊前处理检查 Inspection before welding	ACC	焊前预热温度 Preheat temperature before welding	116°C
最大碳刨深度 Max. depth of gouging	9mm	碳刨总长 Total length of gouging	110mm

焊工 welder	04366	焊接类型 welding type	SMAW	焊接位置 position	1G
焊接电流 Current	168	焊接电压 Voltage	24.7	焊接速度 Speed	155

返修后检查
Inspection After repairing:

外观检查 VT result	ACC	检验员 Inspector	Liyanhua 8712070l	日期 Date	2010.05.01
NDT复检 NDT result	ACC	探伤员 NDT person	Zhoukejun	日期 Date	10.05.02

见证：
Witness/Review:

备注：
Remark：

REPORT OF ULTRASONIC EXAMINATION
UT探伤报告

REPORT NO. 报告编号 B787-UT-12598	DATE 2010.04.26	PAGE 1 OF 1	Revision No: 0

PROJECT NO. :工程编号 ZP06-787		CONTRACTOR : CALTRANS
ITEMS NAME: 部件名称 8CW BOTTOM PLATE SPLICE	DRAWING NO.: 图号 SEG047B	CALTRANS CONTRACT NO.: 04-0120F4 加州工程编号

REFERENCING CODE 参考规范	ACCEPTANCE STANDARD 接受标准	PROCEDURE NO. 程序编号
AWS D1.5-2002	AWS D1.5-2002(Table 6.3)	ZPQC-UT-01
WELDING PROCESS 焊接方法	JOINT TYPE 焊缝类型	CALIBRATION DUE DATE 仪器校正有效期
FCAW SAW	BUTT	Dec. 28ST ,2010

EQUIPMENT 设备	MANUFACTURER 制造商	MODEL NO. 样式编号	SERIAL NO. 序列编号
UT SCOPE	PANAMETRICS	EPOCH-4B	071565311, 061488510, 061495811, 070152011,

CALIBRATION BLOCK 试块	COUPLANT 耦合剂	MATERIAL/THICKNESS 材料厚度
AWS IIW BLOCK TYPE II	C.M.C	A709M-345T2-X 16mm

TRANSDUCER 探头

MANUFACTURER 制造商	ANGLE 角度	FREQUENCY 频率	SIZE 尺寸	MANUFACTURER 制造商	ANGLE 角度	FREQUENCY 频率	SIZE 尺寸
Changchao	70°	2.5MHz	18×18mm				
Changchao	0°	2.5MHz	20mm	Reference Level 参考灵敏度		20dB	

Base metal inspected per AWS D1.5-2002 Section 6.19.5 0° UT OK.

WELD IDENTIFICATION 焊缝部件编号	INDICATION NO. 指示号	PROBE ANGLE 探测角度	FROM FACE 检测面	LEG (次数)	DECIBELS分贝				DISCONTINUITY 不连续性					Discontinuity Evaluation 缺陷估计	Remark 备注
					Indication Level	Reference Level	Attenuation Factor	Indication Rating	LOCATION OF DISCONTINUITY 不连续位置(mm)						
					a	b	c	d	Length 长度	Sound Path 声程	Depth from Surface 距表面深度	From'X 距X	From'Y 距Y		
SEG047B-012	1	70	A	1	45	32	3	+10	6	60	4	-4	1230	REJ.	100%
SEG047B-013	1	70	A	1	44	32	3	+9	10	67	7	-6	1050	REJ.	100%
BLANK															

EXAMINED BY主探 Zhou Haijun 10.04.26
LEVEL - II SIGN / DATE

REVIEWED BY 审核 Sunei 10.04.28
LEVEL - II SIGN / DATE

质量经理 / QCM
签字 SIGN / 日期 DATE

用户CUSTOMER
签字 SIGN / 日期 DATE

(FORM# ZPQC-UT01)

REPORT OF ULTRASONIC EXAMINATION
UT探伤报告

REPORT NO. 报告编号 B787-UT-12598R1	DATE 2010.05.02	PAGE 1 OF 1	Revision No: 0

PROJECT NO. :工程编号 ZP06-787		CONTRACTOR : CALTRANS
ITEMS NAME: 部件名称 8CW BOTTOM PLATE SPLICE	DRAWING NO.: 图号 SEG047B	CALTRANS CONTRACT NO.: 04-0120F4 加州工程编号

REFERENCING CODE 参考规范	ACCEPTANCE STANDARD 接受标准	PROCEDURE NO. 程序编号
AWS D1.5-2002	AWS D1.5-2002(Table 6.3)	ZPQC-UT-01
WELDING PROCESS 焊接方法	JOINT TYPE 焊缝类型	CALIBRATION DUE DATE 仪器校正有效期
SMAW	BUTT	Dec. 28ST ,2010

EQUIPMENT 设备	MANUFACTURER 制造商	MODEL NO. 样式编号	SERIAL NO. 序列编号
UT SCOPE	PANAMETRICS	EPOCH-4B	071565311, 061488510, 061495811, 070152011,
CALIBRATION BLOCK 试块	COUPLANT 耦合剂	MATERIAL/THICKNESS 材料厚度	
AWS IIW BLOCK TYPE Ⅱ	C.M.C	A709M-345T2-X	16mm

TRANSDUCER 探头

MANUFACTURER 制造商	ANGLE 角度	FREQUENCY 频率	SIZE 尺寸	MANUFACTURER 制造商	ANGLE 角度	FREQUENCY 频率	SIZE 尺寸
Changchao	70°	2.5MHz	18×18mm				
Changchao	0°	2.5MHz	20mm	Reference Level 参考灵敏度		20dB	

Base metal inspected per AWS D1.5-2002 Section 6.19.5 0° UT OK.

WELD IDENTIFICATION 焊缝部件编号	INDICATION NO. 指示号	PROBE ANGLE 探测角度	FROM FACE 检测面	LEG (次数)	DECIBELS分贝				DISCONTINUITY 不连续性					Discontinuity Evaluation 缺陷估计	Remark 备注
					Indication Level	Reference Level	Attenuation Factor	Indication Rating	LOCATION OF DISCONTINUITY 不连续位置(mm)						
					a	b	c	d	Length 长度	Sound Path 声程	Depth from Surface 距表面深度	From"X 距X	From"Y 距Y		
SEG047B-012	1R1	70				32								ACC.	100%
SEG047B-013	1R1	70				32								ACC.	100%
AFTER B-WR12523 12524															
BLANK															

EXAMINED BY主探
Zhou Haijun 2010.05.02
LEVEL - II SIGN / DATE

REVIEWED BY 审核
SUWEN 2010.05.02
LEVEL - II SIGN / DATE

质量经理 / QCM
签字 SIGN / 日期 DATE

用户CUSTOMER
签字 SIGN / 日期 DATE

(FORM# ZPQC-UT01)

DEPARTMENT OF TRANSPORTATION
DIVISION OF ENGINEERING SERVICES
Office of Structural Materials
Quality Assurance and Source Inspection

Bay Area Branch
690 Walnut Ave.St. 150
Vallejo, CA 94592-1133
(707) 649-5453
(707) 649-5493

Contract #: 04-0120F4
Cty: SF/ALA Rte: 80 PM: 13.2/13.9
File #: xx.25A

QUALITY ASSURANCE -- NON-CONFORMANCE RESOLUTION

Location: Changxing Island, Shanghai, P.R. China **Report No:** NCS-000623
Prime Contractor: American Bridge/Fluor Enterprises, a JV **Date:** 24-May-2010
Submitting Contractor: Zhenhua Port Machinery Company, Ltd (ZPMC), Changxing Island **NCR #:** ZPMC-0540

Type of problem:

Welding	☐	**Concrete**	☐	**Other**	☑	
Welding	☐	**Curing**	☐	**Procedural**	☐	**Bridge No:** 34-0006
Joint fit-up	☐	**Coating**	☐	**Other**	☑	**Component:**
Procedural	☐	**Procedural**	☐	**Descripton:**		

Date the Non-Conformance Report was written: 28-Dec-2009

Description of Non-Conformance:

During the Quality Assurance Ultrasonic Testing (UT) review of weld located on Segment 8CE, this Quality Assurance Inspector (QA) discovered the following issue:
-One (1) Class “A” indication measuring approximately 40 mm in length.
-The dB rating is +6.
-The weld is identified as SEG048*-005.
-The weld is a Complete Joint Penetration (CJP) butt weld joining Deck Plate DP364A to DP337A.
-The indication is clearly marked by QA on/near the weld.
-OBG Segment 8CE is located in front of blast bay 1.
-This QA generated a TL-6027 UT report for this weld on this date.
The Notice of Witness Inspection Number (NWIT) is 004949. The indication is located inside the area that has been previously tested and accepted by ZPMC Quality Control (QC) personnel. As per the contract documents, ZPMC’s QC personnel are required to perform 100% UT inspection of this weld.

Contractor's proposal to correct the problem:

Repair said indication and perform NDT required to verify weld quality.

Corrective action taken:

Contractor supplied WRR used during weld repair along with subsequent NDT documentation verifying weld is now in conformance with Contract weld quality requirements. An internal NCR was also issued by the contractor in regards to this issue.

Did corrective action require Engineer's approval? ☐ **Yes** ☑ **No**
If so, name of Engineer providing approval: **Date:**
Is Engineer's approval attached? ☐ **Yes** ☑ **No**

Comments:

This report is for the purpose of determining conformance with the contract documents and is not for the purpose of making repair or fit for purpose recommendations. Should you require recommendations concerning repairs or remedial efforts please contact Jim Simonis, who represents the Office of Structural

Materials for your project.

Inspected By:	Simonis,Jim	Quality Assurance Inspector
Reviewed By:	Wahbeh,Mazen	QA Reviewer