DEPARTMENT OF TRANSPORTATION
DIVISION OF ENGINEERING SERVICES
Office of Structural Materials
Quality Assurance and Source Inspection

Bay Area Branch
690 Walnut Ave.St. 150
Vallejo, CA 94592-1133
(707) 649-5453
(707) 649-5493

Contract #: 04-0120F4
Cty: SF/ALA Rte: 80 PM: 13.2/13.9
File #: 69.25B

QUALITY ASSURANCE -- NON-CONFORMANCE REPORT

Location: Changxing Island, Shanghai, P.R. China **Report No:** NCR-000566
Prime Contractor: American Bridge/Fluor Enterprises, a JV **Date:** 28-Dec-2009
Submitting Contractor: Zhenhua Port Machinery Company, Ltd (ZPMC), Changxing Island **NCR #:** ZPMC-0539

Type of problem:

Welding	☐	**Concrete**	☐	**Other**	☑	
Welding	☐	**Curing**	☐	**Procedural**	☐	**Bridge No:** 34-0006
Joint fit-up	☐	**Coating**	☐	**Other**	☑	**Component:** Lift 12 East BP
Procedural	☐	**Procedural**	☐	**Description:** Missed UT Indication		

Reference Description: Missed UT Linear Indication Lift 12 East Bottom Panel

Description of Non-Conformance:

During the Quality Assurance Ultrasonic Testing (UT) review of weld located on OBG BP3017A-001, this Quality Assurance Inspector (QA) discovered the following issue:

-A total of one (1) rejectable Class “A” indication measuring approximately 40 mm in length, the db rating is +2.

-The Weld is the transverse Complete Joint Penetration (CJP) butt weld joining BP to BP.

-The weld designation is BP3017-001-003 (Lift 12E).

-The job is located in the OBG Bay #19.

-The Notice of Witness Inspection Number (NWIT) is 004952.

-The member is identified as SPCM.

-The weld is required to be 100% ultrasonically inspected by ZPMC Quality Control personnel.

The indication is located inside the area that has been previously tested and accepted by ZPMC Quality Control (QC) personnel. For additional information please see NDT report for this date.

Applicable reference:

Special Provisions Section 8.3: “Quality Control (QC) shall be the responsibility of the Contractor. As a minimum, the Contractor shall perform inspection and testing of each weld joint prior to welding, during welding, and after welding as specified in this section and to ensure that materials and workmanship conform to the requirements of the contract documents.”

AWS D1.5 Section 6.26.3.1: “Welds that are subject to UT in addition to visual inspection shall be acceptable if they meet the following requirements:…(1) Welds subject to tensile stress under any condition of loading shall conform to the requirements of Table 6.3…(2) Welds subject to compressive stress shall conform to the requirements of Table 6.4.”

Who discovered the problem: Hiranch Patel

Name of individual from Contractor notified: Peng Wen Jun

Time and method of notification: 1700 hours, 12/28/09, Verbal

QUALITY ASSURANCE -- NON-CONFORMANCE REPORT

(Continued Page 2 of 2)

Name of Caltrans Engineer notified: Bill Howe

Time and method of notification: 1900 hours, 12/28/09, Email

QC Inspector's Name: Zhong Cheng

Was QC Inspector aware of the problem: ☐ **Yes** ☑ **No**

Contractor's proposal to correct the problem:

N/A

Comments:

This report is for the purpose of determining conformance with the contract documents and is not for the purpose of making repair or fit for purpose recommendations. Should you require recommendations concerning repairs or remedial efforts please contact Mazen Wahbeh, +(86) 134.7247.7571, who represents the Office of Structural Materials for your project.

Inspected By:	Tsang,Eric	SMR
Reviewed By:	Wahbeh,Mazen	SMR

DEPARTMENT OF TRANSPORTATION - District 4 Toll Bridge
333 Burma Road
Oakland CA 94607
Tel: Fax:

NON-CONFORMANCE REPORT TRANSMITTAL

To:	AMERICAN BRIDGE/FLUOR, A JV 375 BURMA ROAD OAKLAND CA 95607	**Date:**	29-Dec-2009
		Contract No:	04-0120F4 04-SF-80-13.2 / 13.9
Dear:	Mr. Charles Kanapicki	**Job Name:**	SAS Superstructure
Attention:	Mr. Thomas Nilsson Project/Fabrication Manager	**Document No:**	05.03.06-000529
Subject:	NCR No. ZPMC-0539		

Reference Description: Missed UT Linear Indication Lift 12 East Bottom Panel

The attached Non-Conformance Report describes an occurrence where the contractor did not comply with a requirement of the contract document as indicated below:

- ☑ Material or Workmanship not in conformance with contract documents.
- ☑ Quality Control (QC) not performed in conformance with contract documents.
- ☐ Recurring QC issue that constitutes a systematic problem in quality control.
- ☐ Non-Conformance Resolved.

Material Location: OBG **Lift:** 12

Remarks:

During the Quality Assurance Ultrasonic Testing (UT) review of weld located on OBG BP3017A-001, this Quality Assurance Inspector (QA) discovered the following issue:

-A total of one (1) rejectable Class “A” indication measuring approximately 40 mm in length, the db rating is +2.

-The Weld is the transverse Complete Joint Penetration (CJP) butt weld joining BP to BP.

-The weld designation is BP3017-001-003 (Lift 12E).

-The job is located in the OBG Bay #19.

-The Notice of Witness Inspection Number (NWIT) is 004952.

-The member is identified as SPCM.

-The weld is required to be 100% ultrasonically inspected by ZPMC Quality Control personnel.

The indication is located inside the area that has been previously tested and accepted by ZPMC Quality Control (QC) personnel. For additional information please see NDT report for this date.

Action Required and/or Action Taken:

Submit a repair procedure to the engineer for approval. Ensure that the ZPMC technician that missed this indication is trained and equipped in a manner to successfully identify these indications.

Transmitted by: Bill Howe

Attachments: ZPMC-0539

cc: Rick Morrow, Gary Pursell, Peter Siegenthaler, Stanley Ku, Brian Boal, Jason Tom, Contract Files, Ching Chao

File: 05.03.06

AMERICAN BRIDGE/FLUOR ENTERPRISES, a JV

P.O. BOX 23223 Oakland, CA 94623

Phone (510) 419-0120 / Fax (510) 839-0666

NCR PROPOSED RESOLUTION

To: CALTRANS - SAS Superstructure
333 Burma Road
Oakland CA 94607

Attention: Pursell, Gary
Resident Engineer

Ref: 05.03.06-000529

Subject: NCR No. ZPMC-0539

Dated: **18-Jan-2010**

Contract No.: 04-0120F4
04-SF-80-13.2 / 13.9

Job Name: SAS Superstructure

Document No.: **ABF-NPR-000519 Rev: 00**

Contractor's Proposed Resolution:

Reference Resolution: As a means of preventing future occurrences, the ABF QCM has performed refresher UT training. See attached UT training agenda and attendance roster.

As it is necessary to respond to the NCR with a proposed plan of action, ABF is doing so without all of the repair documentation at this time. As a means of preventing future occurrences, the ABF QCM has performed refresher UT training. See attached UT training agenda and attendance roster. The ABF QCM has been discussing missed UT indications with the ZPMC QCM and related NDT supervisory personnel. The ZPMC level III is in the process of assessing personnel, techniques and equipment. ABF has purchased GE Technology transducers to distribute to both ZPMC and ABF UT personnel in a cooperative effort to match the equipment of CT. These transducers will arrive to the job site approximately the end of January 10 at which time they will be put into immediate use. ZPMC requests this NCR be placed in the Approved Action Pending status category until such time that all the repair documents have been assembled and submitted.

Submitted by: Lawton, Steve

Attachment(s): ABF-NPR-000519R00;

Caltrans' comments:

Status: AAP

Date: 25-Jan-2010

The preventative measures taken by the QCM and the proposed resolution for closing NCR submitted by the contractor are acceptable. The NCR will be closed upon completion of the repair and review of the repair documents by the Engineer when submitted by the contractor.

Submitted by: Chao, Ching

Date: 25-Jan-2010

Attachment(s):

American Bridge / FLUOR
A JOINT VENTURE

UT Refresher Training Agenda

Subject: UT Techniques

Reason for Training: Several CT NCR's for missed UT indications

1. **Safety**
   a. Safety Glasses
   b. Gloves (if required)
   c. Knee Pads
   d. Electrical Shock

2. **Tools**
   a. Calibrated UT Machine — condition of machine
   b. Coaxial cable — condition of cable
   c. Transducer — condition of transducer
   d. IIW Block
   e. Scraper
   f. UT couplant

3. **Inspection Techniques**
   a. Surface preparation
   b. Location of weld — UT from beveled plate
   c. Scanning patterns
   d. Correct choice of Angles
   e. Calibration — per ZPMC procedure at regular intervals
   f. Scanning speed
   g. Know where your sound is at…. First leg, second leg etc…

4. **Inspection Criteria**
   a. Table 6.3 or Table 6.4
   b. Are surface inspections complete — VT and or MT should always occur before UT
   c. Scanning Levels
   d. Criteria dictated by the thinner of the two members
   e. Planar flaws

ZPMC

教育培训纪录

培训编号：

培训内容：	UT复习培训教程 UT Techniques
培训对像：	ZPMC UT GUYS
授课人员：	STEVE LAWTON
培训类型：	UT Refresher Training Agenda
培训时间：	2009. 12. 24. 16:30
计划培训地点：	ZPMC NDT OFFICE

人员签到：

姓名	部门	姓名	部门
代更龙 Dai Gengshen	江勇 Jiang Yong		
薛[illegible] Xuelianmin	黄[illegible] Huang Ting		
马[illegible] Ma Jiang	黄[illegible] Huang Tin		
汤[illegible] Tang Xingshan	李[illegible] Li Liming		
马[illegible] Ma Jian	王[illegible] Wang [illegible]		
邱[illegible] Qiu Qiangfu	徐[illegible] Xu Rongyang		
况[illegible] Huang Jian	李[illegible] LI XIUYANG		
黄[illegible] Huang Jing			
金[illegible] Jing Jing			
吴[illegible] Wuchao			
鹏[illegible] Lou Dui			
周[illegible] Zhouhaijun			
徐[illegible] Xuhao			

AMERICAN BRIDGE/FLUOR ENTERPRISES, a JV

P.O. BOX 23223 Oakland, CA 94623

Phone (510) 419-0120 / Fax (510) 839-0666

NCR PROPOSED RESOLUTION

To: CALTRANS - SAS Superstructure
333 Burma Road
Oakland CA 94607

Attention: Pursell, Gary
Resident Engineer

Ref: 05.03.06-000529

Subject: NCR No. ZPMC-0539

Dated: **24-Feb-2010**

Contract No.: 04-0120F4
04-SF-80-13.2 / 13.9

Job Name: SAS Superstructure

Document No.: **ABF-NPR-000519 Rev: 01**

Contractor's Proposed Resolution:

Reference Resolution: ZPMC has repaired this indication and is providing their internal NCR, the weld repair report and the associated NDT. ZPMC requests closure of this NCR.

ZPMC has repaired this indication and is providing their internal NCR, the weld repair report and the associated NDT. ZPMC requests closure of this NCR.

Submitted by: Ishibashi, Joshua

Attachment(s): ABF-NPR-000519R01;

Caltrans' comments:

Status: CLO

Date: 24-Feb-2010

The information received is sufficient to close this NCR.

Submitted by: Howe, Bill

Date: 24-Feb-2010

Attachment(s):

AMERICAN BRIDGE/FLUOR ENTERPRISES, a JV

P.O. BOX 23223 Oakland, CA 94623

Phone (510) 419-0120 / Fax (510) 839-0666

NCR PROPOSED RESOLUTION

To: CALTRANS - SAS Superstructure
333 Burma Road
Oakland CA 94607

Attention: Pursell, Gary
Resident Engineer

Ref: 05.03.06-000529

Subject: NCR No. ZPMC-0539

Dated: **03-Mar-2010**

Contract No.: 04-0120F4
04-SF-80-13.2 / 13.9

Job Name: SAS Superstructure

Document No.: **ABF-NPR-000519 Rev: 02**

Contractor's Proposed Resolution:

Reference Resolution: ZPMC is submitting the weld repair report and associated NDT to show that the weld is acceptable. Based on this ZPMC request closure of this NCR.

ZPMC is submitting the weld repair report and associated NDT to show that the weld is acceptable. Based on this ZPMC request closure of this NCR.

Submitted by: Ishibashi, Joshua

Attachment(s): ABF-NPR-000519R02;

Caltrans' comments:

Status: CLO

Date: 03-Mar-2010

Non-Conformance ZPMC-0539 was previously closed in response to NPR-0519R01 on February 24, 2010.

Submitted by: Wright, Doug

Date: 03-Mar-2010

Attachment(s):

No. B-585

LETTER OF RESPONSE

TO: American Bridge/Flour
DATE: 2010-1-15
REGARDING: NCR-000566(ZPMC-0539)

With this letter of response, ZPMC requests closure of CT NCR-000566(ZPMC-0539) what mentioned that CT inspector observed missed UT indication in bottom panel.

- ZPMC acknowledged this problem and has issued internal NCR. See attached NCR-B-378(ZPMC-0539)
- WWR was issued reflecting to the confirmed UT indication in BP3017-001-003. See attached B-WR9638.
- UT was performed to warrant the weld's quality. See attached B787-UT-10445R1.

Base on the taken actions and attached documentations, ZPMC requests closure of this NCR.

ATTACHMENT:
NCR-000566(ZPMC-0539)
B-WR9638
B787-UT-10445
B787-UT-10445R1

1/15/10

WR 9638
10445

Nonconformance Report
不符合项报告

Project Name: S.F.O.B.B 项目名称: 美国加州海湾大桥		**NCR Number:** NCR 编号: NCR-B-378(ZPMC-0539)
Item: Missed UT indication 名称描述: UT 漏检	**Item Number:** 件号: 第十二吊装段	**Drawing:** 图号:
Location: outside yard 位置: 外场		**Date:** 日期: 2010-01-13

Description of Nonconformance:

During the Quality Assurance Ultrasonic Testing review of weld located on OBG BP3017A-001,This Quality Assurance Inspector discovered the following issue:

A total of one rejectable Class A indication measuring approximately 40 mm in length, The DB rating is +2.

The weld is the transverse Complete Joint Penetration CJP butt weld joining BP to BP.

The weld designation is BP3017-001-003

The job is located in the OBG bay #19

The Notice of Witness inspection number is 004952

The member is identified as SPCM

The weld is required to be 100% ultrasonically inspected by ZPMC Quality Control Personnel.

The indication is located inside the area that has been previously tested and accepted by ZPMC Quality Control personnel. For additional information please see NDT report for this date.

在加州检验员对 BP3017A-001 进行 UT 时发现，一处长达 40MM 的 A 级缺陷。

焊缝为底板与底板对接焊缝。

焊缝编号为 BP3017-001-003

车间为底 19 跨车间。

预约单编号为 004952

此构件为 SPCM。

此焊缝之前已被 ZPMC100%的 UT 接受了。

Work By: Li Liming **Prepared by:** Wanglu **Reviewed by QCE:** Zhao Shuangbao
施工方: 2010.01.15 准备: 2010.1.13 质量工程师批准: 2010.1.13.

☐ Drawing Error 图纸错误 ☐ Material Defect 材料缺陷 ☐ Fabrication Error 制作错误 ☐ Other 其他原因

Disposition: ☐ Use as is 回用 ☐ Repair 返修 ☐ Reject 拒收
处理措施:

Recommendation:
建议: 确认返修. Confirm and repair.

Prepared by: Li Liming **Approved by QCA:** _____
准备 2010.01.15 质量经理批准

Reason for Nonconformance:
不符合原因: 超标缺陷未检测出.
Defect exceeded requirement and can't inspect.

Prevention of Re-occurrence:
预防措施:

加强焊缝检验。

Enhance weld inspection.

Approved by/批准: _____ 2010.01.

Technical Justification for Use-As-Is/Repair: ☐ **Attachment** ☐ **Non-attachment**
回用或返修的技术依据: 附件 无附件

Reviewed /批准: _____

Verification: ☐ **Acceptable** ☐ **Unacceptable**
确认: 可接受 不可接受

Verified by QCI/质检确认: _____ **Reviewed by QCA/质检主任审核:** _____

DEPARTMENT OF TRANSPORTATION - District 4 Toll Bridge
333 Burma Road
Oakland CA 94607
Tel: Fax:

NON-CONFORMANCE REPORT TRANSMITTAL

To:	AMERICAN BRIDGE/FLUOR, A JV 375 BURMA ROAD OAKLAND CA 95607	**Date:**	29-Dec-2009
		Contract No:	04-0120F4 04-SF-80-13.2 / 13.9
Dear:	Mr. Charles Kanapicki	**Job Name:**	SAS Superstructure
Attention:	Mr. Thomas Nilsson Project/Fabrication Manager	**Document No:**	05.03.06-000529
Subject:	NCR No. ZPMC-0539		
Reference Description:	Missed UT Linear Indication Lift 12 East Bottom Panel		

The attached Non-Conformance Report describes an occurrence where the contractor did not comply with a requirement of the contract document as dicated below:

- ☑ Material or Workmanship not in conformance with contract documents.
- ☑ Quality Control (QC) not performed in conformance with contract documents.
- ☐ Recurring QC issue that constitutes a systematic problem in quality control.
- ☐ Non-Conformance Resolved.

Material Location: OBG **Lift:** 12

Remarks:

During the Quality Assurance Ultrasonic Testing (UT) review of weld located on OBG BP3017A-001, this Quality Assurance Inspector (QA) discovered the following issue:

-A total of one (1) rejectable Class "A" indication measuring approximately 40 mm in length, the db rating is +2.

-The Weld is the transverse Complete Joint Penetration (CJP) butt weld joining BP to BP.

-The weld designation is BP3017-001-003 (Lift 12E).

-The job is located in the OBG Bay #19.

-The Notice of Witness Inspection Number (NWIT) is 004952.

-The member is identified as SPCM.

-The weld is required to be 100% ultrasonically inspected by ZPMC Quality Control personnel.

The indication is located inside the area that has been previously tested and accepted by ZPMC Quality Control (QC) personnel. For additional information please see NDT report for this date.

Action Required and/or Action Taken:

Submit a repair procedure to the engineer for approval. Ensure that the ZPMC technician that missed this indication is trained and equipped in a manner to successfully identify these indications.

Transmitted by: Bill Howe

Attachments: ZPMC-0539

cc: Rick Morrow, Gary Pursell, Peter Siegenthaler, Stanley Ku, Brian Boal, Jason Tom, Contract Files, Ching Chao

File: 05.03.06

Received
NCT-000529 29 Dec 09

STATE OF CALIFORNIA--BUSINESS,TRANSPORTACTION AND HOUSING AGENCY Arnold Schwarzenegger, Governor

DEPARTMENT OF TRANSPORTATION
DIVISION OF ENGINEERING SERVICES
Office of Structural Materials
Quality Assurance and Source Inspection

Bay Area Branch
690 Walnut Ave.St. 150
Vallejo, CA 94592-1133
(707) 649-5453
(707) 649-5493

Contract #: 04-0120F4
Cty: SF/ALA Rte: 80 PM: 13.2/13.9
File #: 69.25B

QUALITY ASSURANCE -- NON-CONFORMANCE REPORT

Location: Changxing Island, Shanghai, P.R. China **Report No:** NCR-000566
Prime Contractor: American Bridge/Fluor Enterprises, a JV **Date:** 28-Dec-2009
Submitting Contractor: Zhenhua Port Machinery Company, Ltd (ZPMC), Changxing Island **NCR #:** ZPMC-0539

Type of problem:

Welding	☐	**Concrete**	☐	**Other**	☑	
Welding	☐	**Curing**	☐	**Procedural**	☐	**Bridge No:** 34-0006
Joint fit-up	☐	**Coating**	☐	**Other**	☑	**Component:** Lift 12 East BP
Procedural	☐	**Procedural**	☐	**Description:** Missed UT Indication		

Reference Description: Missed UT Linear Indication Lift 12 East Bottom Panel

Description of Non-Conformance:

During the Quality Assurance Ultrasonic Testing (UT) review of weld located on OBG BP3017A-001, this Quality Assurance Inspector (QA) discovered the following issue:

-A total of one (1) rejectable Class "A" indication measuring approximately 40 mm in length, the db rating is +2.

-The Weld is the transverse Complete Joint Penetration (CJP) butt weld joining BP to BP.

-The weld designation is BP3017-001-003 (Lift 12E).

-The job is located in the OBG Bay #19.

-The Notice of Witness Inspection Number (NWIT) is 004952.

-The member is identified as SPCM.

-The weld is required to be 100% ultrasonically inspected by ZPMC Quality Control personnel.

The indication is located inside the area that has been previously tested and accepted by ZPMC Quality Control (QC) personnel. For additional information please see NDT report for this date.

Applicable reference:

Special Provisions Section 8.3: "Quality Control (QC) shall be the responsibility of the Contractor. As a minimum, the Contractor shall perform inspection and testing of each weld joint prior to welding, during welding, and after welding as specified in this section and to ensure that materials and workmanship conform to the requirements of the contract documents."

AWS D1.5 Section 6.26.3.1: "Welds that are subject to UT in addition to visual inspection shall be acceptable if they meet the following requirements:…(1) Welds subject to tensile stress under any condition of loading shall conform to the requirements of Table 6.3…(2) Welds subject to compressive stress shall conform to the requirements of Table 6.4."

Who discovered the problem: Hiranch Patel
Name of individual from Contractor notified: Peng Wen Jun
Time and method of notification: 1700 hours, 12/28/09, Verbal

QUALITY ASSURANCE -- NON-CONFORMANCE REPORT

(Continued Page 2 of 2)

Name of Caltrans Engineer notified: Bill Howe

Time and method of notification: 1900 hours, 12/28/09, Email

QC Inspector's Name: Zhong Cheng

Was QC Inspector aware of the problem: ☐ **Yes** ☑ **No**

Contractor's proposal to correct the problem:

N/A

Comments:

This report is for the purpose of determining conformance with the contract documents and is not for the purpose of making repair or fit for purpose recommendations. Should you require recommendations concerning repairs or remedial efforts please contact Mazen Wahbeh, +(86) 134.7247.7571, who represents the Office of Structural Materials for your project.

Inspected By:	Tsang,Eric	SMR
Reviewed By:	Wahbeh,Mazen	SMR

焊縫返修报告
Welding Repair Report

					版本 Rev. No.
项目名称 Project Name	美国海湾大桥 SFOBB	部件图号 Drawing No	BP3017	报告编号 Report No.	0
合同号 Contract No.	04-0120F4	部件名称 Items Name	BOTTOM PLATE SPLICE	NDT报告编号 Report No.of NDT	B-WR9638
项目编号 Project No.:	ZP06-787				B787-UT-10445

焊縫缺陷描述：
Description of welding discontinuity:

Rejected indication found by ultrasonic inspection is less than the maximum allowance aggregate length.
(UT探伤发现的缺陷总长度小于最大允许长度。) BP3017-001-003

检验员 (Inspector) :Han Feng 日期(Date)： 09.12.29

焊縫返修位置示意图：
Draft of welding discontinuity:

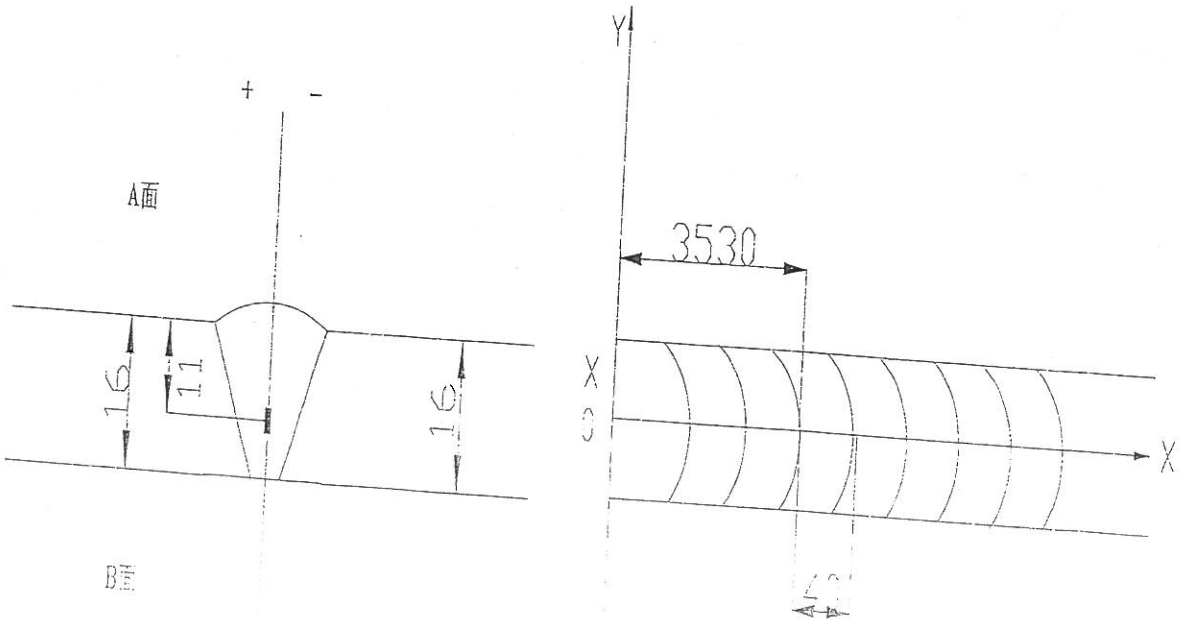

WELD NUMBER.BP3017-001-003

产生原因:

Caused:

1、焊道未及时处理干净。

1. Did not clear the weld pass completely in time.

车间负责人(Foreman): Zhang Guiming 日期(Date): 2009.12.31

处理意见

Disposition :

1. 从缺陷距离端面较近一侧（D≤0.65T, D为缺陷深度，T为板厚）采用碳刨或打磨的方法去除焊缝缺陷;
2. 参照返修焊接工艺规程（WPS）准备正确的接头型式，预热和焊接;
3. 焊前对修补区域进行VT检测保证缺陷完全被清除;
4. 将修补区域打磨到与母材或邻近焊缝平齐;
5. 对焊缝进行UT检测，检测范围为返修区域以及其两端各延长50mm。

1. Gouge or grind from nearer side from metal edge （D≤0.65T, "D" is depth of defects, "T" is thickness of metal） to remove all defects;
2. Follow repair WPS for joint preparation, preheat, and weld deposit;
3. Verify with VT no defects remain in the weld joint prior to welding;
4. Grind the repaired area flush with base metal or the adjacent weld;
5. Perform UT inspection to the weld along with 50mm on each end of the repair area;

工 艺: Le Xiao Lin 09.12.31
Technical engineer

审核:
Approved by

日期
Date

焊缝返修报告
Welding Repair Report

版本 Rev. No.: 0

项目名称 Project Name	美国海湾大桥 SFOBB	部件图号 Drawing No	BP3017	报告编号 Report No.	B-WR9638
合同号 Contract No.:	04-0120F4	部件名称 Items Name	BOTTOM PLATE SP LICE	NDT报告编号 Report No.of NDT	B787-UT-10445
项目编号 Project No.:	ZP06-787				

纠正措施:

Correction action to prevent re occurrence:

1.加强焊接监控和道间清理。

1. Improve monitoring of welding and interpass cleaning.

车间负责人(Foreman): Zhang Guiming 日期(Date): 2009.12.31

参照的WPS编号 Repair WPS No.	WPS-345-SMAW-1 G(1F)-FCM-Repair WPS-345-FCAW-1 G(1F)-FCM-Repair WPS-345-SMAW-4 G(4F)-FCM-Repair	工艺员 technologist	Lu Xiaolin 09.12.31
返修（碳刨）前预热温度 Preheat temperature before gouging	90	返修的缺陷 Description of discontinuity	Slag
焊前处理检查 Inspection before welding	Ok	焊前预热温度 Preheat temperature before welding	95
最大碳刨深度 Max. depth of gouging	7	碳刨总长 Total length of gouging	100

焊工 welder	06281	焊接类型 welding type	SMAW	焊接位置 position	1G
焊接电流 Current	180	焊接电压 Voltage	24	焊接速度 Speed	120

返修后检查 Inspection After repairing:

外观检查 VT result	Ok	检验员 Inspector	Zhu Zhonghai 07522101	日期 Date	10.01.05
NDT复检 NDT result	Ok	探伤员 NDT person		日期 Date	2010.1.8.
见证： Witness/Review:	Ok				

备注： Remark:

REPORT OF ULTRASONIC EXAMINATION
UT探伤报告

REPORT NO. 报告编号 B787-UT-10445	DATE 2009.12.29	PAGE 1 OF 1	Revision No: 0

PROJECT NO. :工程编号 ZP06-787		CONTRACTOR : CALTRANS
ITEMS NAME: 部件名称 BOTTOM PLATE SPLICE	DRAWING NO.: 图号 BP3017	CALTRANS CONTRACT NO.: 04-0120F4 加州工程编号

REFERENCING CODE 参考规范	ACCEPTANCE STANDARD 接受标准	PROCEDURE NO. 程序编号
AWS D1.5-2002	AWS D1.5-2002(Table 6.3)	ZPQC-UT-01
WELDING PROCESS 焊接方法	JOINT TYPE 焊缝类型	CALIBRATION DUE DATE 仪器校正有效期
FCAW SAW	BUTT	Dec. 28ST ,2010

EQUIPMENT 设备	MANUFACTURER 制造商	MODEL NO. 样式编号	SERIAL NO. 序列编号
UT SCOPE	PANAMETRICS	EPOCH-4B	071565311, 061488510, 061495811, 070152011,
CALIBRATION BLOCK 试块	COUPLANT 耦合剂	MATERIAL/THICKNESS 材料厚度	
AWS IIW BLOCK TYPE II	C.M.C	A709M-345F2-X	12/16mm

TRANSDUCER 探头

MANUFACTURER 制造商	ANGLE 角度	FREQUENCY 频率	SIZE 尺寸	MANUFACTURER 制造商	ANGLE 角度	FREQUENCY 频率	SIZE 尺寸
Changchao	70°	2.5MHz	18×18mm				
Changchao	0°	2.5MHz	20mm	Reference Level 参考灵敏度		20dB	

Base metal inspected per AWS D1.5-2002 Section 6.19.5 0° UT OK.

WELD IDENTIFICATION 焊缝部件编号	INDICATION NO. 指示号	PROBE ANGLE 探测角度	FROM FACE 检测面	LEG (次数)	DECIBELS分贝				DISCONTINUITY 不连续性					Discontinuity Evaluation 缺陷估计	Remark 备注
					Indication Level	Reference Level	Attenuation Factor	Indication Rating	LOCATION OF DISCONTINUITY 不连续位置(mm)						
					a	b	c	d	Length 长度	Sound Path 声程	Depth from Surface 距表面深度	From'X 距X	From'Y 距Y		
BP3017-001-001		70				32								ACC.	100%
BP3017-001-002		70				32								ACC.	100%
BP3017-001-003	1	70	A	2	40	32	2	+6	40	58	11	0	3530	REJ.	100%

AFTER HSR1(B)-7987

BLANK

EXAMINED BY主探	REVIEWED BY 审核
Hou Tong	Wu chao
LEVEL - II SIGN / DATE 09.12.29	LEVEL - II SIGN / DATE 09.12.29
质量经理 / QCM	用户CUSTOMER
签字 SIGN / 日期 DATE	签字 SIGN / 日期 DATE

(FORM# ZPQC-UT31)

REPORT OF ULTRASONIC EXAMINATION
UT探伤报告

REPORT NO. 报告编号	DATE	PAGE	Revision No:
B787-UT-10445R1	2010.01.08	1 OF 1	0

PROJECT NO. :工程编号	CONTRACTOR :
ZP06-787	CALTRANS

ITEMS NAME: 部件名称	DRAWING NO.: 图号	CALTRANS CONTRACT NO.: 加州工程编号
BOTTOM PLATE SPLICE	BP3017	04-0120F4

REFERENCING CODE 参考规范	ACCEPTANCE STANDARD接受标准	PROCEDURE NO. 程序编号
AWS D1.5-2002	AWS D1.5-2002(Table 6.3)	ZPQC-UT-01

WELDING PROCESS 焊接方法	JOINT TYPE 焊缝类型	CALIBRATION DUE DATE仪器校正有效期
SMAW	BUTT	Dec. 28ST ,2010

EQUIPMENT 设备	MANUFACTURER 制造商	MODEL NO. 样式编号	SERIAL NO. 序列编号
UT SCOPE	PANAMETRICS	EPOCH-4B	071565311, 061488510, 061495811, 070152011,

CALIBRATION BLOCK 试块	COUPLANT 耦合剂	MATERIAL/THICKNESS 材料厚度	
AWS IIW BLOCK TYPE II	C.M.C	A709M-345F2-X	12/16mm

TRANSDUCER 探头

MANUFACTURER 制造商	ANGLE 角度	FREQUENCY 频率	SIZE 尺寸	MANUFACTURER 制造商	ANGLE 角度	FREQUENCY 频率	SIZE 尺寸
Changchao	70°	2.5MHz	18×18mm				
Changchao	0°	2.5MHz	20mm	Reference Level 参考灵敏度		20dB	

Base metal inspected per AWS D1.5-2002 Section 6.19.5 0° UT OK.

WELD IDENTIFICATION 焊缝部件编号	INDICATION NO. 指示号	PROBE ANGLE 探测角度	FROM FACE 检测面	LEG (次数)	DECIBELS分贝				DISCONTINUITY 不连续性					Discontinuity Evaluation 缺陷估计	Remark 备注
					Indication Level	Reference Level	Attenuation Factor	Indication Rating	LOCATION OF DISCONTINUITY 不连续位置(mm)						
					a	b	c	d	Length 长度	Sound Path 声程	Depth from Surface 距表面深度	From'X 距X	From'Y 距Y		
BP3017-001-003	1R1	70				33								ACC.	100%
AFTER B-WR9638															
BLANK															

EXAMINED BY主探	REVIEWED BY 审核
Han Fey	Hua Tij
LEVEL - II SIGN / DATE 10.01.08	LEVEL - II SIGN / DATE 10/01/08
质量经理 / QCM	用户CUSTOMER
签字 SIGN / 日期 DATE	签字 SIGN / 日期 DATE

(FORM# ZPQC-UT01)

DEPARTMENT OF TRANSPORTATION
DIVISION OF ENGINEERING SERVICES
Office of Structural Materials
Quality Assurance and Source Inspection

Bay Area Branch
690 Walnut Ave.St. 150
Vallejo, CA 94592-1133
(707) 649-5453
(707) 649-5493

Contract #: 04-0120F4
Cty: SF/ALA Rte: 80 PM: 13.2/13.9
File #: xx.25A

QUALITY ASSURANCE -- NON-CONFORMANCE RESOLUTION

Location: Changxing Island, Shanghai, P.R. China **Report No:** NCS-000528
Prime Contractor: American Bridge/Fluor Enterprises, a JV **Date:** 11-Mar-2010
Submitting Contractor: Zhenhua Port Machinery Company, Ltd (ZPMC), Changxing Island **NCR #:** ZPMC-0539

Type of problem:

Welding	☐	**Concrete**	☐	**Other**	☑	
Welding	☐	**Curing**	☐	**Procedural**	☐	**Bridge No:** 34-0006
Joint fit-up	☐	**Coating**	☐	**Other**	☑	**Component:**
Procedural	☐	**Procedural**	☐	**Descripton:**		

Date the Non-Conformance Report was written: 28-Dec-2009

Description of Non-Conformance:

During the Quality Assurance Ultrasonic Testing (UT) review of weld located on OBG BP3017A-001, this Quality Assurance Inspector (QA) discovered the following issue:

-A total of one (1) rejectable Class “A” indication measuring approximately 40 mm in length, the db rating is +2.

-The Weld is the transverse Complete Joint Penetration (CJP) butt weld joining BP to BP.

-The weld designation is BP3017-001-003 (Lift 12E).

-The job is located in the OBG Bay #19.

-The Notice of Witness Inspection Number (NWIT) is 004952.

-The member is identified as SPCM.

-The weld is required to be 100% ultrasonically inspected by ZPMC Quality Control personnel.

The indication is located inside the area that has been previously tested and accepted by ZPMC Quality Control (QC) personnel. For additional information please see NDT report for this date.

Contractor's proposal to correct the problem:

Repair indication and perform NDT required to verify weld quality.

Corrective action taken:

Contractor submitted WRR along with subsequent NDT documentation verifying the weld is in conformance with Contract specifications. An internal NCR was also issued by the Contractor in regards to this matter.

Did corrective action require Engineer's approval? ☐ **Yes** ☑ **No**

If so, name of Engineer providing approval: **Date:**

Is Engineer's approval attached? ☐ **Yes** ☑ **No**

Comments:

This report is for the purpose of determining conformance with the contract documents and is not for the purpose of making repair or fit for purpose recommendations. Should you require recommendations concerning repairs or remedial efforts please contact Jim Simonis 152. 1675.3703, who represents the Office of Structural Materials for your project.

QUALITY ASSURANCE -- NON-CONFORMANCE RESOLUTION

(Continued Page 2 of 2)

Inspected By:	Simonis,Jim	Quality Assurance Inspector
Reviewed By:	Wahbeh,Mazen	QA Reviewer