DEPARTMENT OF TRANSPORTATION
DIVISION OF ENGINEERING SERVICES
Office of Structural Materials
Quality Assurance and Source Inspection

Bay Area Branch
690 Walnut Ave.St. 150
Vallejo, CA 94592-1133
(707) 649-5453
(707) 649-5493

Contract #: 04-0120F4
Cty: SF/ALA Rte: 80 PM: 13.2/13.9
File #: 13.25B

QUALITY ASSURANCE -- NON-CONFORMANCE REPORT

Location: Clackamas, Oregon
Prime Contractor: American Bridge/Fluor Enterprises, a JV
Submitting Contractor: Oregon Iron Works Clackamas, Or.

Report No: NCR-000234
Date: 19-Mar-2009
NCR #: OIW-0011

Type of problem:

Welding	☑	**Concrete**	☐	**Other**	☐		
Welding	☐	**Curing**	☐	**Procedural**	☐	**Bridge No:**	34-0006
Joint fit-up	☐	**Coating**	☐	**Other**	☐	**Component:**	Hinge K Pipe Beam Fuse
Procedural	☑	**Procedural**	☐	**Description:**			

Reference Description: AWS D1.5 2002 Table 5.3 (Electrode)

Description of Non-Conformance:

OIW's Quality Control Manager (QCM) Thomas Tomovick and Welding Superintendent Vern Taute have allowed OIW production to exceed the welding electrode diameter limitations as listed in Table 5.3 by decreasing the electrode diameter by more than one standard size. The welding was performed on interior stiffener rings to HPS 485 Pipe Beam Fuse (Pc, Mk a124-3). Welding procedure specification (WPS) used during the build up welding was WPS No. 3046 Rev 3. WPS 3046 is for Hobart FCAW filler metal 1.6mm (1/16") diameter. OIW actually used Hobart FCAW .045" (1.2mm) diameter electrode. OIW does not have an approved WPS for the .045" diameter welding electrode nor have they performed a PQR to support the welding.

OIW production performed welding build up (due to the gap tolerance exceeding 5mm) on interior ring stiffener MK#a125 and MK#b125. Length of weld build up that was deposited was approximately 890 mm (a125) and approximately 3,320mm (b125). Weld joints numbers are listed as WM3-06, WM3-07, WM3-02 &WM3-03.

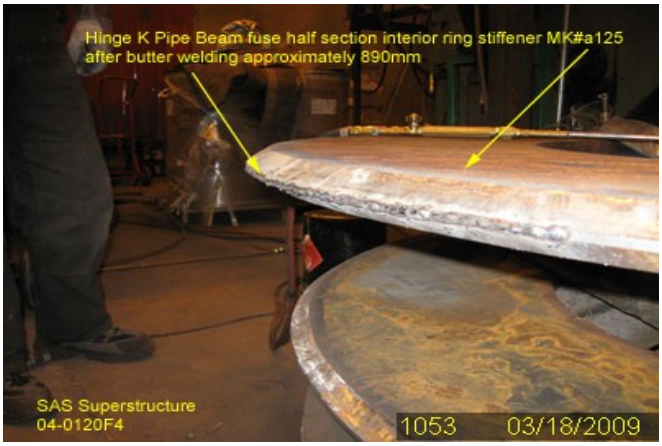

QUALITY ASSURANCE -- NON-CONFORMANCE REPORT

(Continued Page 2 of 2)

Applicable reference:

Table 5.3

PQR Essential Variable Changes for WPSs Qualified per 5.13.3

Electrode

4) Increase or decrease in electrode diameter by more than one standard size

Who discovered the problem: Quality Assurance Inspector Sherri Brannon

Name of individual from Contractor notified: Mr. Thomas Tomovick (OIW QCM) & Jim Bowers (ABF WQCM)

Time and method of notification: 1629 hour, Verbal Phone Notification on 03-19-2009 & verbal to Mr. Bowers on 3-20-09

Name of Caltrans Engineer notified: Mr. Warren Collins

Time and method of notification: 1630 hour verbal on 3/20/2009

QC Inspector's Name: Mr. Mike Gregson

Was QC Inspector aware of the problem: ☑ **Yes** ☐ **No**

Contractor's proposal to correct the problem:

Unkown at this time.

Comments:

This report is for the purpose of determining conformance with the contract documents and is not for the purpose of making repair or fit for purpose recommendations. Should you require recommendations concerning repairs or remedial efforts please contact Mohammad Fatemi (916) 813-3677,, who represents the Office of Structural Materials for your project.

Inspected By:	Brannon,Sherri	QA Inspector
Reviewed By:	Adame,Joe	QA Inspector

DEPARTMENT OF TRANSPORTATION

333 Burma Road

Oakland CA 94607

Tel: 510-622-5661 Fax:

NON-CONFORMANCE REPORT TRANSMITTAL

To: AMERICAN BRIDGE/FLUOR, A JV
375 BURMA ROAD
OAKLAND CA 95607

Dear: Mr. Charles Kanapicki

Attention: Mr. James Bowers

Subject: NCR No. OIW-0011

Date: 25-Mar-2009

Contract No: 04-0120F4
04-SF-80-13.2 / 13.9

Job Name: SAS Superstructure

Document No: 05.03.06-000202

Reference Description: AWS D1.5 2002 Table 5.3 (Electrode)

The Attached Non-Conformance Report describes an occurrence where the contractor did not comply with a requirement of the contract document as indicated below:

- [x] Material or Workmanship not in conformance with contract documents.
- [x] Quality Control (QC) not performed in conformance with contract documents.
- [ ] Recurring QC issue that constitutes a systematic problem in quality control.
- [ ] Non-Conformance Resolved.

Remarks:

Material Location: Pipe Beam **Lift:** N/A

Welds performed using Hobart Brother's 0.45" (1.2mm) diameter FCAW electrode are outside of the qualified range pursuant to Table 5.3 of AWS D1.5-2002.

Table 5.3 of AWS D1.5-2002 permits a reduction in electrode diameter of only one standard size from that qualified. The 0.45" electrode used represents a reduction of two sizes.

See NCR #OIW-011 for further details.

Action Required and/or Action Taken:

Perform 100% NDT (MT) of the non-conforming welds.
Qualify the electrode in accordance with the Contract requirements before using it to perform any welding.

Transmitted By: Warren Collins Assistant Structural Rep

Attachments: OIW-0011

cc: Rick Morrow, Brian Boal

File: 05.03.06

AMERICAN BRIDGE/FLUOR ENTERPRISES, a JV

P.O. BOX 23223 Oakland, CA 94623

Phone (510) 419-0120 / Fax (510) 839-0666

NCR PROPOSED RESOLUTION

To: CALTRANS - SAS Superstructure
333 Burma Road
Oakland CA 94607

Attention: Pursell, Gary
Resident Engineer

Ref: 05.03.06-000202

Subject: NCR No. OIW-0011

Dated: **02-Apr-2009**

Contract No.: 04-0120F4
04-SF-80-13.2 / 13.9

Job Name: SAS Superstructure

Document No.: **ABF-NPR-000206 Rev: 00**

Contractor's Proposed Resolution:

Reference Resolution: OIW requests the existing weld build-up as described by NCR-OIW-11 be accepted for use in the “as-is” condition.

No further use of OIW-WPS-3046 Rev 3 utilizing .045 Hobart weld wire is or shall be permitted on the Hinge K Beam Project. All weld build-up described by NCR OIW 11 is recorded under Weld Repair Reports (WRR) and examined by both VT and MT in accordance with AWS D1.5, as evidenced in the attached Weekly Inspection reports. OIW requests the existing weld build-up as described by NCR-OIW-11 be accepted for use in the “as-is” condition.

Submitted by: Kanapicki, Charles

Attachment(s): ABF-NPR-000206R00; Info Copy of WPS -3049 Rev 1.pdf; TL-2244-416 - SL-054 - Response to Caltrans NCR -000234 - OIW-0011.pdf; Weld Repair Report 2244-09.pdf; Weld Repair Report 2244-10.pdf; Weld Repair Report 2244-11.pdf

---

Caltrans' comments:

Status: REJ

Date: 03-Feb-2010

Per meetings and discussions, Heat Input calculations are required to demonstrate that the wire consumable was used within the acceptable range.

As these have not been provided, the NCR Resolution is not acceptable. It is noted that the required details have been provided in ABF-NPR-000428R00, which resolved the NCR.

Submitted by: Collins, Warren

Date: 03-Feb-2010

Attachment(s):

OREGON IRON WORKS, INC. 9700 SE Lawnfield Rd Clackamas, OR ©	Welding Procedure Specification (WPS)			This document contains confidential and trade secret information and is the property of Oregon Iron Works, Inc. Do not distribute without Oregon Iron Works consent.	
WPS No. 3049	Revision No.	01	Date:	03-25-09	Page 1 of 6

Scope: This WPS defines the requirements for fabricating M270/A709 HPS (70W) to M270/A709 HPS (70W) in accordance with AWS D1.5 for fracture & seismic performance non - critical applications.

Prepared By: Mike Rudarmel	QA/QC Approval: Thomas C. Tomoroff	Process: Semi Auto or Machine FCAW
Supporting PQR(s): 502		

Joints:

Joint Type(s): **Only Non-Critical Repair** welds as defined by D1.5 paragraph **12.17.2 and Tack Welding**

CJP Backing: ☒Required (welded from one side) ☒None (welded from both sides) ☐None (welded from one side)

Backing Material: ☒Fused Metal ☐Unfused Metal ☐Non-metallic ☐Other

Joint Notes:

1. Typical joints are shown in the "joint detail" section of this WPS. Sketches, Production Drawings, Weld Symbols or Written Description show the general arrangement of the parts to be welded.
2. Retainers are only to be used when shown on joint drawings.

Materials:

Thicknesses & Sizes: (Base metal and weld)

Metal thickness- groove (T):	3.2 mm (1/8") - unlimited	**Metal thickness- fillet (T):**	N/A
Pipe diameter (groove):	Not Addressed	**Pipe diameter (fillet):**	N/A
Groove weld thickness (t):	3.2 mm (1/8") - unlimited	**Fillet weld size (t):**	N/A

Base Metal(s):

Material Specifications: Only welding of the materials below to itself is allowed

Specification	Grade	ASME P/Group No.	D1.1 Group
ASTM A709/AASHTO M270	HPS (70W) 485W	None	IV
Welded to:			
ASTM A709/AASHTO M270	HPS (70W) 485W	None	IV

Consumables: (Filler, flux, shielding, etc) - No supplemental filler metal/Consumable inserts to be used unless noted.

Type	Specification	Classification	Trade Name	Size
Wire	AWS A5.29	E91T1-NiIC-H4	Select 920-Ni1	1.3 mm (.052")

Shielding Gas: N/A **Backing/Trailing gas:** None

Equipment: (Machines, torches, etc.)

Welding Machine:	DC-600 or equivalent	**Torch:**	N/A
Nozzle:	¾"	**Tungsten:**	N/A

Preheat, PWHT:

Min. Preheat & Interpass Temp(s):	HPS 70W	HPS 70W
Heat input-> Thickness (in) mm	(38.1-45.7 kJ/in) 1.5-1.8kJ/mm	N/A
(¾") 20 mm or less	(125F) 40°C	N/A
>(3/4"-1 1/2") 20-40 mm	(200F)100°C	N/A
>(1 1/2"-2 1/2") 40-60 mm	(300F)140°C	N/A
>(2 1/2") 60 mm	(400F)200°C	N/A

Post Weld Heat Treat or Preheat maintenance: PWHT not allowed. Preheat maintenance is not required.

Note: Prior to ANY Gouging, Preheat Base MTL (150ºF) to 66°C

Preheat & Interpass temperatures **shall be** monitored with temperature indicating crayons.

Heating note(s): Temperatures are in degrees (Fahrenheit) Celsius.

Maximum Interpass temp: (450F) 230°C for material > (1 ½") 40 mm and (400F) 200°C for material (1 ½") 40 mm or less.

Minimum preheat for repairs is (320ºF) 160º C for material 40 mm thick and less, and (400ºF) 200ºC for >40 mm per D1.5, 12.6(8) (a).

INFORMATION ONLY

Technique & Positions:

Groove Positions:	F, H	**Fillet Positions:**	N/A	**Vertical Progression:**	N/A
Weld Bead Type:	☐ Stringer ☐ Weave ☒ Either	**Passes per side:**	☐ Single ☒ Multiple ☒ Either		
Maximum pass thickness:	6.5 mm (1/4") for fill passes				
Initial Cleaning:	Machine, wire brush, grind, etc. Metal to be clean of harmful elements within 25.4 mm (1") of weld joint.				
Interpass Cleaning:	Remove slag and wire brush.				
Back Gouging:	Grind or Carbon Arc. Back gouging to sound metal is required.				
Number of electrodes:	1	**Peening:**	None		

Technique Notes:
1. For Base Metal & Weld Repair all provisions of **AWS D1.5 – 2002 Section (Clause) 12.17.6** shall apply.
2. Remove any defective tack welds. Inspect & taper ends when required if not removed before welding.
3. Neither the depth nor maximum width of a weld bead shall exceed the width of the face.

Electrical Characteristics & Parameters:

Notes: See travel speed table for specific travel speed at specific amps/volts. Travel speed in centimeters per minute (cm/min) Inches Per Minute (IPM). Heat input is in kilojoules (kJ) kJ/mm (kJ/in).

Layer or pass	Process	Filler Dia.	Filler Class	Current Type	Amps	Volts	Travel Speed	Heat Input kJ/mm (kJ/in)
All	FCAW	1.3 mm (0.052")	E91T1-NiC-H4	DCEP	262-320	26.1-30.1	See Tables Below	1.5-2.1 (38.1-52.7)

Travel Speed Table (Travel speeds in millimeters/minute)

Amps \ Volts	26.1	26.5	27	27.5	28	28.5	29	29.5	30.1
262	198 - 274	201 - 278	204 - 283	208 - 288	213 - 293	216 - 299	220 - 304	224 - 309	228 - 315
265	201 - 277	204 - 281	207 - 286	211 - 292	215 - 297	219 - 302	223 - 307	227 - 313	231 - 319
270	204 - 282	207 - 286	211 - 292	215 - 297	219 - 302	223 - 308	227 - 313	231 - 319	235 - 325
275	208 - 287	211 - 292	215 - 297	219 - 303	223 - 308	227 - 314	231 - 319	235 - 325	240 - 331
280	212 - 293	215 - 297	219 - 302	223 - 308	227 - 314	231 - 319	235 - 325	239 - 330	244 - 337
285	216 - 298	219 - 302	223 - 308	227 - 314	231 - 319	235 - 325	240 - 331	244 - 336	248 - 343
290	220 - 303	223 - 307	227 - 313	231 - 319	235 - 325	240 - 331	244 - 336	248 - 342	253 - 349
295	223 - 308	227 - 313	231 - 319	235 - 325	239 - 330	244 - 336	248 - 342	252 - 348	257 - 355
300	227 - 314	230 - 318	235 - 324	239 - 330	243 - 336	248 - 342	252 - 348	257 - 354	261 - 361
305	230 - 319	234 - 323	239 - 329	243 - 336	248 - 342	252 - 348	256 - 354	261 - 360	266 - 367
310	235 - 324	238 - 329	243 - 335	247 - 341	252 - 347	256 - 353	261 - 360	265 - 366	270 - 373
315	239 - 329	242 - 334	247 - 340	251 - 347	256 - 353	260 - 359	265 - 365	269 - 372	275 - 379
320	242 - 335	246 - 339	251 - 346	255 - 352	260 - 359	264 - 365	269 - 371	274 - 378	279 - 385

INFORMATION ONLY

Travel Speed Table (Travel speeds in inches/minute(in/min))

Amps \ Volts	26.1	26.5	27	27.5	28	28.5	29	29.5	30.1
262	8 - 11	8 - 11	8 - 11	8 - 11	8 - 12	8 - 12	9 - 12	9 - 12	9 - 12
265	8 - 11	8 - 11	8 - 11	8 - 11	8 - 12	9 - 12	9 - 12	9 - 12	9 - 13
270	8 - 11	8 - 11	8 - 11	8 - 12	9 - 12	9 - 12	9 - 12	9 - 13	9 - 13
275	8 - 11	8 - 11	8 - 12	9 - 12	9 - 12	9 - 12	9 - 13	9 - 13	9 - 13
280	8 - 12	8 - 12	9 - 12	9 - 12	9 - 12	9 - 13	9 - 13	9 - 13	10 - 13
285	8 - 12	9 - 12	9 - 12	9 - 12	9 - 13	9 - 13	9 - 13	10 - 13	10 - 13
290	9 - 12	9 - 12	9 - 12	9 - 13	9 - 13	9 - 13	10 - 13	10 - 13	10 - 14
295	9 - 12	9 - 12	9 - 13	9 - 13	9 - 13	10 - 13	10 - 13	10 - 14	10 - 14
300	9 - 12	9 - 13	9 - 13	9 - 13	10 - 13	10 - 13	10 - 14	10 - 14	10 - 14
305	9 - 13	9 - 13	9 - 13	10 - 13	10 - 13	10 - 14	10 - 14	10 - 14	10 - 14
310	9 - 13	9 - 13	10 - 13	10 - 13	10 - 14	10 - 14	10 - 14	10 - 14	11 - 15
315	9 - 13	10 - 13	10 - 13	10 - 14	10 - 14	10 - 14	10 - 14	11 - 15	11 - 15
320	10 - 13	10 - 13	10 - 14	10 - 14	10 - 14	10 - 14	11 - 15	11 - 15	11 - 15

Repair Joint Details: (Groove design/angles, root face/opening, J/U radius, etc)

Per paragraph 12.17.6(9), joint details must allow adequate access for welding. Suggested joint configurations are below.

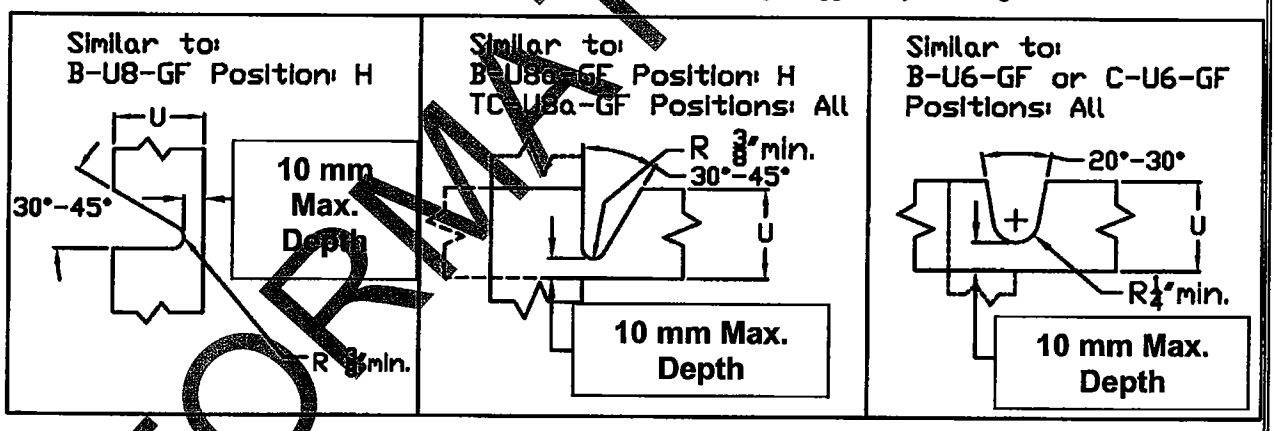

NOTE:

WPS 3049 is subject to the following limitations:

FCAW-G will be used exclusively for tack welding, fit up and non-critical base metal and weld repair 10 mm (3/8") or less subject to Oregon Iron Works procedure SP-002 section P of and section O (FCP) of the WQCP.

Any other application is subject to engineering review and approval prior to use.

SEE ATTACHED FCM PROCEDURE

INFORMATIONAL

1. Scope

1.1. This procedure establishes the methods for controlling repairs to base material or weld metal of components designated in the plans as fracture critical members (FCMs), SPCM

2. General

2.1. Repairs, except as described in paragraph 2.2, shall be defined as either noncritical or critical and require approval by the Engineer.

2.2. Repair welding which consists solely of the deposition of additional weld metal to compensate for insufficient weld throat, used to fill shallow excavations produced by grinding performed to remove small discontinuities, roll over, or undercut, will not require documentation or prior approval of the Engineer.

2.3. Weld repairs to base material or weld metal performed by OIW shall be performed utilizing the parameters of an approved WPS.

a. The repair WPS shall include sketches, or full-size drawings, as necessary to describe the unacceptable discontinuity and the proposed method of repair.

b. Unacceptable discontinuities to be repaired shall be shown in plan view, elevation, and section as necessary, at the completion of repairs to document differences between the presumed initial type, size, orientation, and location of the unacceptable discontinuity as observed and measured during repair.

2.4. The Material Manufacturer (MM) shall be permitted to identify discontinuities and to remove defective areas. The MM shall not be permitted to deposit any weld metal.

3. Responsibilities

3.1. The Project Manager is responsible for the review of noncritical and critical repairs.

3.2. The QA Manager is responsible for:

a. Obtaining review and approval when required for Weld Repair Reports (WRRs), FCM Condition Reports, FCM Repair Reports and Nonconformance Reports (NCRs).

b. Selection and approval of NDE processes required after defect removal, and after weld repair.

INFORMATION ONLY

4. Procedure for Noncritical Repairs

4.1. Noncritical repairs shall be defined as follows:

a. Gouges in edges that are 10mm (3/8 in.) deep or less.

b. Laminar discontinuities less than 25mm (1 in.) deep, or with a depth of less that one-half the thickness of the plate cut edge, whichever is less, provided that the laminar discontinuity is not with 300mm (12 in.) of a tension groove weld. Repair shall be made by excavating from the cut edge.

c. The repair of base material surfaces when ASTM A6 provides for repair welding.

d. First-time excavation and repair from one surface of groove welds and of fillet welds which contain unacceptable porosity, slag, or fusion discontinuities provided the excavations do not exceed the following limits.

Length of Weld "L"	Total Length of Excavations
Up to 0.5 m (1-1/2 ft.)	L or 250mm (10 in.) whichever is less
Over 0.5m (1-1/2 ft.) to 1.0 m (3 ft.)	300mm (1ft)
Over 1.0 m (3 ft.) to 2.0 m (6 ft.)	450mm (1-1/2ft.)
Over 2.0 m (6 ft.) to 4.0 m (12 ft.)	600mm (2 ft.)
Over 4.0 m (12 ft.) to 8.0 m (24 ft.)	900mm (3 ft.)
Over 8.0 (24 ft.)	900mm (3 ft.) or 10% L, whichever is greater

e. The depth of groove weld excavations shall not exceed 10mm.

f. N/A

g. Repairs to ends of members where there is no dead load or live load stress.

h. Deposition of weld metal up to 10mm (3/8 inch) or 1/4 of the material thickness, whichever is less, to correct for length or joint geometry.

i. Except as required by AWS D1.5, Section 12.5, PWHT is not required, unless the excavation is greater than 12mm (1/2 in.) deep.

INFORMATION ONLY

4.2. A WRR is initiated to describe the deficiency.

4.3. The QA Inspector is notified and verifies that the deficiency is properly classified as a noncritical repair.

4.4. The WRR is forwarded to the Project Manager, or his designee, to obtain concurrence with the recommended disposition.

4.5. The WRR/WPS shall include the following provisions.

a. Surfaces shall be cleaned or ground as necessary as an aid to visual inspection and NDE to enable OIW and the QA Inspector to identify and quantify the discontinuities.

b. The discontinuity shall be drawn as it appears from visual inspection and NDE.

c. Preheat prior to air carbon arc gouging shall be listed. The method and extent of excavation shall be completely described.

d. The defect removal area shall be examined by MT prior to welding.

e. All air carbon arc gauged and thermal cut surfaces that form a boundary for a repair weld shall be ground to form a smooth, bright surface. Oxygen gouging is not permitted.

f. All required runoff tabs and backup bars shall be shown in detail.

g. Preheat and interpass temperatures shall be listed.

h. The approved WPS to be utilized for completing the repair shall be listed.

i. Repair weld surfaces shall be ground flush with the plate or blended to the same contour and throat dimension as the adjoining weld.

j. Repairs in tension groove butt welds shall be examined by UT and RT. Repairs to all other groove welds shall be examined by UT. Fillet weld repairs shall be examined by MT. Repairs to notches on thermal cut surfaces shall be tested by MT and UT as applicable per D1.5, section 3.2.2.3

k. Base material repairs shall be examined by MT.

l. In addition, for base material repairs 8mm (5/16 in.) or greater in depth, UT shall be performed.

INFORMATION ONLY

OREGON IRON WORKS, INC.
9700 S.E. LAWNFIELD ROAD • CLACKAMAS, OREGON 97015
TELEPHONE (503) 653-6300 • FAX (503) 653-5870

transmittal

TO: **American Bridge/Fluor , J.V.**
375 Burma Rd
Oakland, CA 94607

TRANSMITTAL NO.: TL -2244-00416
DATE: 4/1/2009
VIA: Email & Overnight

ATTN: Bob Kick

PROJECT NAME: **HINGE K PIPE BEAMS**
2244

ATTACHED ARE: SL--054 & Attachments

BLUE PRINT	STATUS	DESCRIPTION	REMARKS
		SUBMITTED FOR YOUR APPROVAL:	
1	FAPP	SL-2244-054 - Response to Caltrans NCR -000234 / OIW-0011 Weld Repair Report 2244-09 Weld Repair Report 2244-10 Weld Repair Report 2244-11 MT Report 2244-MT-109 MT Report 2244-MT-114 MT Report 2244-MT-112 Info Copy of WPS -3049 Rev 1	

[ ] Please return one print with your approval or comments noted thereon.

Please acknowledge receipt by signing and returning one (1) copy of this transmittal.

By: _____ Date: _____

OREGON IRON WORKS, INC

Melissa Hamm for:
Bill Pender / Project Manager

f_oiw_standard_tr_oo

OREGON IRON WORKS, INC.
9700 S.E. LAWNFIELD ROAD • CLACKAMAS, OREGON 97015
TELEPHONE (503) 653-6300 • FAX (503) 653-5870

April 1, 2009

American Bridge/Fluor , J.V.
375 Burma Rd
Oakland, CA 94607

Reply to: SL-2244-00054

Attention: **Bob Kick**

Reference: **HINGE K PIPE BEAMS**
Contract No. CALTRANS CONTRACT NO. 04-0120F4

Subject: **Response to Caltrans NCR -000234 / OIW -0011**

Dear Mr. Kick:

Oregon Iron Works, Inc. (OIW) Quality Control Department has reviewed the above referenced NCR-OIW-0011, regarding weld build-up performed on stiffeners Mk a125 and b125, associated with weld joints WM3-06, WM3-07, WM3-02 and WM3-03. The following provides a consolidation of various conversations held this past week regarding this issue along with the actions taken by OIW to address and resolve the matter.

NCR 011 Meeting Notes:

The following individuals were in attendance for the NCR-11 meeting held at OIW on March 25, 2009: Mohammad J. Fatemi, Pat Lowry, Ted Smith and Joe Adame (Caltrans). Oregon Iron Works, Inc. Quality department was represented by Thomas C. Tomovick. During the meeting, Caltrans inquired as to when OIW would respond to NCR -000234 / OIW -0011. Tom responded that OIW had not received the actual Non-Conformance Report and that once OIW had received the report, it would be addressed in the following manner.

No further use of OIW-WPS - 3046 Rev 3 utilizing .045 Hobart weld wire is or shall be permitted on the Hinge K Pipe Beam Project. All weld build-up described by NCR-OIW-0011 is recorded under (WRR) Weld Repair Reports and examined by both VT and MT in accordance with AWS D1.5, as evidenced in the attached Weekly Inspection Reports. OIW requests the existing weld build-up as described by NCR –OIW-0011 be accepted for use in the "as is" condition.

The information/data contained on this drawing/file/document (whether in electronic or hard format and copy) contains Proprietary and Confidential information of Oregon Iron Works, Inc. (OIW), 9700 SE Lawnfield Road, Clackamas, Oregon. The disclosure, release, distribution, or unauthorized use of this information/data without the express written consent of OIW is expressly prohibited."

All current and future FCAW weld build-up of HPS 485 material performed by OIW for the Hinge K Pipe Beam project is and will be performed using only the newly approved WPS-3049 Rev 1.

As a point of clarification, it should be noted that there are actually three individual stiffener rings associated with NCR-OIW-0011. They are as follows:

Pc Mk a125 installed in cylinder a124-03 (1LH) --- WRR 2244-09 / 2244 MT-114
Pc Mk b125 installed in cylinder a124-03 (1LH) --- WRR 2244-10 / 2244 MT-109

Pc Mk b125 Ht# D3147-7 is not installed in a cylinder --- WRR 2244-11 / 2244 MT-112
This is the actual stiffener which was in process when the weld wire diameter issue surfaced on March 19th. At that time, all work was suspended for this stiffener and a QC hold tag applied. The QC hold tag is now removed and we are proceeding with the weld build-up process utilizing WPS 3049 Rev 1.

Please contact the undersigned should you have any questions or concerns regarding the information contained in this document.

Respectfully,
OREGON IRON WORKS, INC.

Bill Pender
Project Manager

CC: Tom Tomovick

Attachments:
- Weld Repair Report 2244-09
- Weld Repair Report 2244-10
- Weld Repair Report 2244-11
- MT Report 2244-MT-109
- MT Report 2244-MT-114
- MT Report 2244-MT-112
- Info Copy of WPS -3049 Rev 1

The information/data contained on this drawing/file/document (whether in electronic or hard format and copy) contains Proprietary and Confidential information of Oregon Iron Works, Inc. (OIW), 9700 SE Lawnfield Road, Clackamas, Oregon. The disclosure, release, distribution, or unauthorized use of this information/data without the express written consent of OIW is expressly prohibited."

OREGON IRON WORKS, INC.
9700 S.E. LAWNFIELD ROAD • CLACKAMAS, OREGON 97015
TELEPHONE (503) 653-6300 • FAX (503) 653-5870

WELD REPAIR REPORT

Non-Critical

WRR No: 2244-11

Project: SF0BB Hinge K Pipe Beam Job: 2244 Date: 3/31/09

Piece Mark: b125 Dwg No: 2244-123-sht 1 of 2 Rev No: 4

Sub - Assembly No: Sub-assembly not ID at this time (D3147-7) Dwg No: 2244-123-sht 2 of 2 Rev 3

Material - Type/Size: PL 50mm X 1720mm Dia. Weld Joint I.D. WM3-02, WM3-03

Material Specification: HPS 485 W Type/Grade/Class: HPS 485W

Reason for Weld or Material Repair Receipt Insp. ☐ In process Insp. ☑ Fab Repair ☐

b125 put on hold due to NCR OIW-0011 for using too small weld wire .045 (1.2mm).
WPS 3046 requires plus or minus one wire dia. from 1/16 (1.6mm) wire.
Part has weld metal added in 3 areas see attached map for locations

will be completed with WPS 3049 R-1

Indication Revealed by Production.

QC Inspector Rob Walters

Disposition - Check Each Box Which is Applicable to Required Repair:

Remove Portion of Weld/Base Metal ☐ Remove Entire Weld ☐

Other:

1.) Add weld metal as required.
2.) VT, MT the bevel prep
3.) Perform final dimensional check
4.) Do an MT acceptance report
5.)

NDE Procedure: QC 113 Rev 3 a) Rev:

QC Manager: Thomas C Tomonto Date: 3/31/09

Code: AWS D1.5 Edition: 2002

Defect Removal Method: Thermal Gouging Preheat:

Preweld NDE Results: Report: N/A Performed by:

Final Inspection - Gouge Only

Weld ID:
Weld Proc:
Welder ID:
VT Results:
NDE Results
NDE by:
CWI#

Final Inspection - New Weld

Weld ID:
Weld Proc:
Welder ID:
VT Results:
NDE Results
NDE by:
CWI#

WPS 3046

* NOTE: RING STIFFNER BUILD UP IS IN PROGRESS

FOR PARTS LIST SEE 2244-PL-101

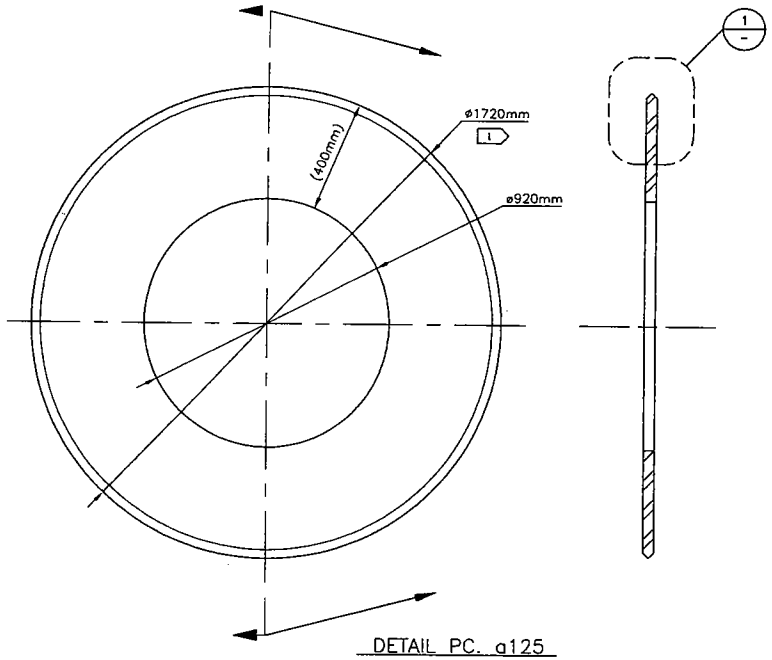

DETAIL PC. a125
PL 40mm X 1720 DIA.
UNIT WT = 1,168 LBS EACH

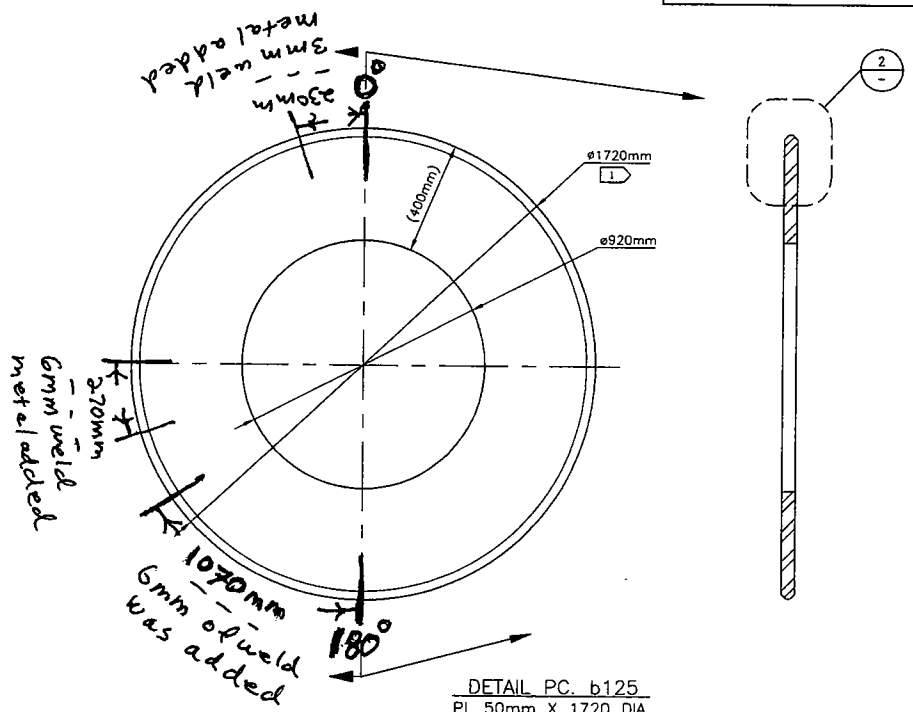

DETAIL PC. b125
PL 50mm X 1720 DIA.
UNIT WT = 1,460 LBS EACH

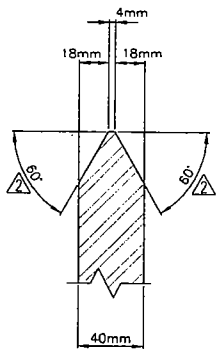

DETAIL 1 -

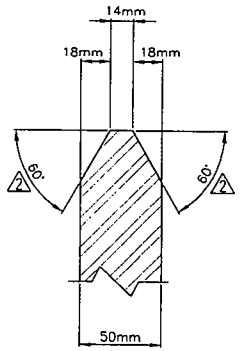

DETAIL 2 -

NOTE:

1. VERIFY O.D. OF STIFFENING RING WITH I.D. OF ROLLED TUBE.

DISTRICT	COUNTY	ROUTE	KILOMETER POST TOTAL PROJECT	BRIDGE NO.	CALTRANS CONTRACT NO.
04	SF	80	13.2/13.9	34-0006L/R	04-0120F4

CALTRANS SHEETS 841 THRU 845
DESIGN REF: HINGE K DETAILS NO. 1 & NO. 2

Oregon Iron Works, Inc.

CAGE CODE	DRAWN	CHECKED	DATE	W/O
5Y009	JEC/HAG	DC	4/4/07	

SAN FRANCISCO OAKLAND BAY BRIDGE EAST SPAN SEISMIC SAFETY PROJECT

SELF-ANCHORED SUSPENSION BRIDGE (SUPERSTRUCTURE & TOWER)
HINGE K PIPE BEAM

FUSE BEAM RING STIFFENER

ZONE	REV.	DATE	DESCRIPTION	DRWN BY	CHK'D BY	APPRV'D BY	APPRV'D DATE
	2	2/4/08	REVISE ANGLE PER OIW	JEC	BP		
	1	9/26/07	REVISE PER APPROVAL	JEC	JC		
	0	4/4/07	FOR APPROVAL	HAG	DC		

THE INFORMATION / DATA CONTAINED ON THIS DRAWING / FILE / DOCUMENT (WHETHER IN ELECTRONIC OR HARD FORMAT AND COPY) CONTAINS PROPRIETARY AND CONFIDENTIAL INFORMATION OF OREGON IRON WORKS, INC. (OIW), 9700 SE LAWNFIELD ROAD, CLACKAMAS, OREGON. THE DISCLOSURE, RELEASE, DISTRIBUTION, OR UNAUTHORIZED USE OF THIS INFORMATION / DATA WITHOUT THE EXPRESS WRITTEN CONSENT OF OIW IS EXPRESSLY PROHIBITED.

NEXT ASSEMBLY: 2244-123

JOB # - BID ITEM - DRWG NO.: 2244-125

REV. 2

Magnetic Particle & Visual Examination Report		DATE:	Tuesday, March 31, 2009
PROJECT		OIW Report Number:	
SFOBB Hinge K Pipe Beam		2244-MT-112	
Job #	2244	Reference Previous Report #	
Item	b125, a124-3	N/A	
Drawing	2244-123 sht 1 of 2 Rev4		

*** Welds listed below~ 100% FVT, Final examination unless otherwise noted.**

Part / Weld Identification	Visual Inspection		NDE			Requirement / NOTE
	Accept	Reject	Accept	Reject	%MT	
b125, Ht# D3147-7	X		X			The weld build-up is currently being processed. MT of one side is done
						WPS 3046 was used w/.045 wire
						Also, reference WRR 2244 11

~Comments~

Length of Weld End			Weld Joint WM3-02, WM3-03				
Length of Reject None			Welder ID None				
Procedure #	QC~113 Rev. 3		Current:	AC	x	DC	
Spec./Standard #	AWS D.5 2002		Carbon Steel				
Equipment/Model:	Parker Probe / DA~400		Serial #	14737			
Pole Spacing:	8"max	Method Type:	Dry Visible Powder	Mfr / Color	Circle Systems / 63, Red		

Inspector # 1:	Rob Walters	Signature:	[signature]
CWI #	98050691		
NDE Certification:	Level II	Dates:	3/31/2009
Inspector # 2:		Signature:	
CWI #			
NDE Certification:	Level II	Date:	
Inspector # 3:		Signature:	
CWI #			
NDE Certification:	Level II	Date:	
Reviewed By	QCM	Signature:	[signature]
		Date:	3/31/09

OREGON IRON WORKS, INC.
9700 S.E. LAWNFIELD ROAD • CLACKAMAS, OREGON 97015
TELEPHONE (503) 653-6300 • FAX (503) 653-5870

WELD REPAIR REPORT

Non-Critical

WRR No: 2244-10

Project: SF0BB Hinge K Pipe Beam Job: 2244 Date: 3/19/09

Piece Mark: b125 Dwg No: 2244-123-sht 1 of 2 Rev No: 4

Sub - Assembly No: a124-03 (1LH) Dwg No: 2244-123-sht 2 of 2 Rev 3

Material - Type/Size: PL 50mm X 1720mm Dia. Weld Joint I.D. WM3-02, WM3-03

Material Specification: HPS 485 W Type/Grade/Class: HPS 485W

Reason for Weld or Material Repair Receipt Insp. ☐ In process Insp. ☑ Fab Repair ☐

Piece b125 is not within fit up tolerance. 10mm out. See attached drawing.

Indication Revealed by Production.

QC Inspector Rob Walters

Disposition - Check Each Box Which is Applicable to Required Repair:

Remove Portion of Weld/Base Metal ☐ Remove Entire Weld ☐

Other:

1.) Add weld metal as required.
2.) VT, MT the bevel prep
3.) Perform final dimensional check
4.) Do an MT acceptance report
5.)

NDE Procedure: QC 113 Rev 3 a) Rev:

QC Manager: Thomas C. Lomont Date: 3/23/09

Code: AWS D1.5 Edition: 2002

Defect Removal Method: NA Thermal Gouging Preheat: NA

Preweld NDE Results: NA Report: N/A Performed by:

Final Inspection - Gouge Only

Weld ID: N/A
Weld Proc:
Welder ID:
VT Results:
NDE Results
NDE by: N/A
CWI#

Final Inspection - New Weld

Weld ID: WM3-03 WM3-02/ B125
Weld Proc: FCAW
Welder ID: S-74
VT Results: accept
NDE Results MT accept
NDE by: Steve Barnett
CWI# 06120481

Magnetic Particle & Visual Examination Report

PROJECT		**DATE:**	Wednsday, March 24, 2009
SFOBB Hinge K Pipe Beam		***OIW Report Number:***	
Job #	**2244**	**2244-MT-109**	
Item	**Fuse Assembly a124-03**	***Reference Previous Report #***	
Drawing	2244- 124 Rev 6	N/A	

**** Welds listed below~ 100% FVT, Final examination unless otherwise noted.***

Part / Weld Identification	*Visual Inspection*		*NDE*			
	Accept	*Reject*	*Accept*	*Reject*	*%MT*	*Requirement / NOTE*
b125, WJ# WM3-02 / WM3-03	**x**		**x**			MT after grinding Reference WRR 2244-10
						Total combined weld build-up 9mm
						—

~Comments~

Length of Weld 5400mm			Weld Joint WM3-02 WM3-03				
Length of Reject None			Welder ID S74,06				
Procedure #	**QC~113 Rev. 3**		*Current:*	**AC**	**x**	**DC**	
Spec./Standard #	**AWS D.5 2002**		*Carbon Steel*				
Equipment/Model:	**Parker Probe / DA~400**		*Serial #*	**14737**			
Pole Spacing:	**8"max**	*Method Type:*	**Dry Visible Powder**	*Mfr / Color*	**Circle Systems / 63, Red**		

Inspector # 1:	**Steve Barnett**	*Signature:*	Steve Barnett
CWI #	**06120481**		
NDE Certification:	**Level II**	*Dates:*	**3-24-2009**
Inspector # 2:		*Signature:*	
CWI #			
NDE Certification:	**Level II**	*Date:*	
Inspector # 3:		*Signature:*	
CWI #			
NDE Certification:	**Level II**	*Date:*	
Reviewed By	QCM	*Signature:*	Thomas C. Tomonto
		Date:	3/31/09

3-23-09

FOR PARTS LIST SEE 2244-PL-101

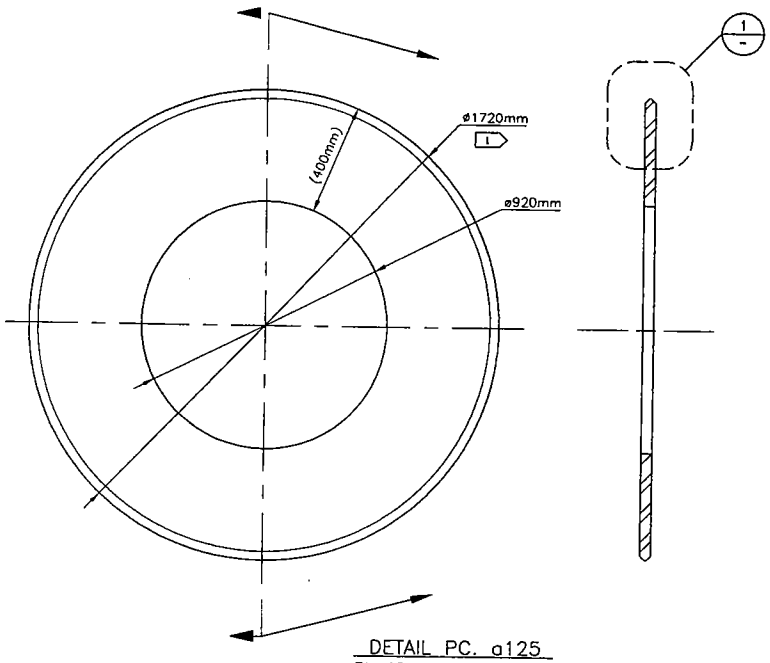

DETAIL PC. a125
PL 40mm X 1720 DIA.
UNIT WT = 1,168 LBS EACH

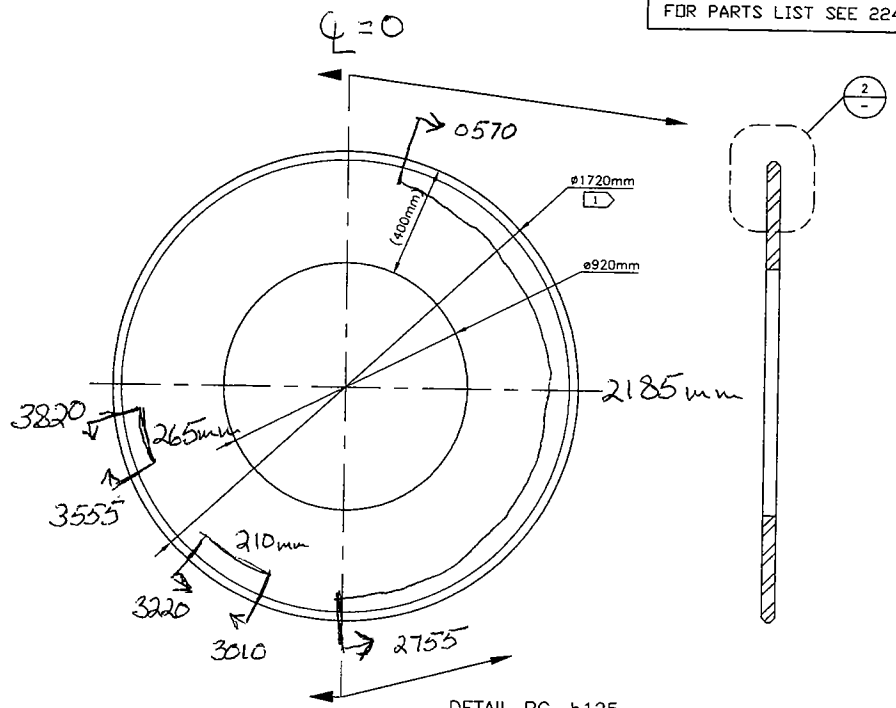

DETAIL PC. b125
PL 50mm X 1720 DIA.
UNIT WT = 1,460 LBS EACH

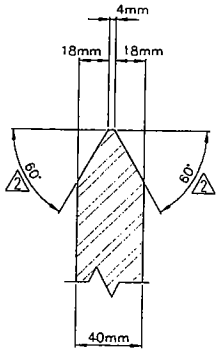

DETAIL 1 -

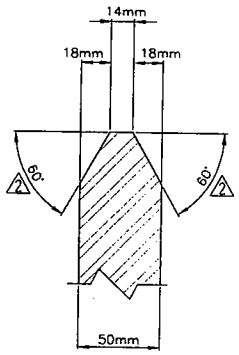

DETAIL 2 -

NOTE:

1. VERIFY O.D. OF STIFFENING RING WITH I.D. OF ROLLED TUBE.

DISTRICT	COUNTY	ROUTE	KILOMETER POST TOTAL PROJECT	BRIDGE NO.	CALTRANS CONTRACT NO.
04	SF	80	13.2/13.9	34-0006L/R	04-0120F4

CALTRANS SHEETS 841 THRU 845
DESIGN REF: HINGE K DETAILS NO. 1 & NO. 2

Oregon Iron Works, Inc.

CAGE CODE	DRAWN	CHECKED	DATE	W/O
5Y009	JEC/HAG	DC	4/4/07	

SAN FRANCISCO OAKLAND BAY BRIDGE EAST SPAN SEISMIC SAFETY PROJECT

SELF-ANCHORED SUSPENSION BRIDGE (SUPERSTRUCTURE & TOWER) HINGE K PIPE BEAM

FUSE BEAM RING STIFFENER

ZONE	REV.	DATE	DESCRIPTION	DRWN BY	CHK'D BY	APPRVD BY	APPRVD DATE
	2	2/4/08	REVISE ANGLE PER OIW	JEC	BP		
	1	9/26/07	REVISE PER APPROVAL	JEC	JC		
	0	4/4/07	FOR APPROVAL	HAG	DC		

THE INFORMATION / DATA CONTAINED ON THIS DRAWING / FILE / DOCUMENT (WHETHER IN ELECTRONIC OR HARD FORMAT AND COPY) CONTAINS PROPRIETARY AND CONFIDENTIAL INFORMATION OF OREGON IRON WORKS, INC. (OIW), 9700 SE LAWNFIELD ROAD, CLACKAMAS, OREGON. THE DISCLOSURE, RELEASE, DISTRIBUTION, OR UNAUTHORIZED USE OF THIS INFORMATION / DATA WITHOUT THE EXPRESS WRITTEN CONSENT OF OIW IS EXPRESSLY PROHIBITED.

NEXT ASSEMBLY 2244-123

JOB # - BID ITEM - DRWG NO. 2244-125

REV. 2

3-24-09

FOR PARTS LIST SEE 2244-PL-101

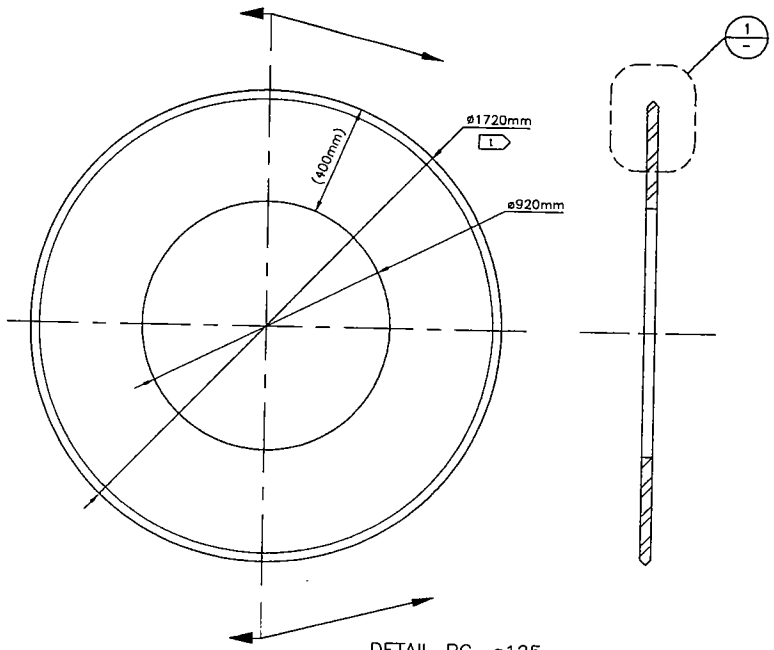

DETAIL PC. a125
PL 40mm X 1720 DIA.
UNIT WT = 1,168 LBS EACH

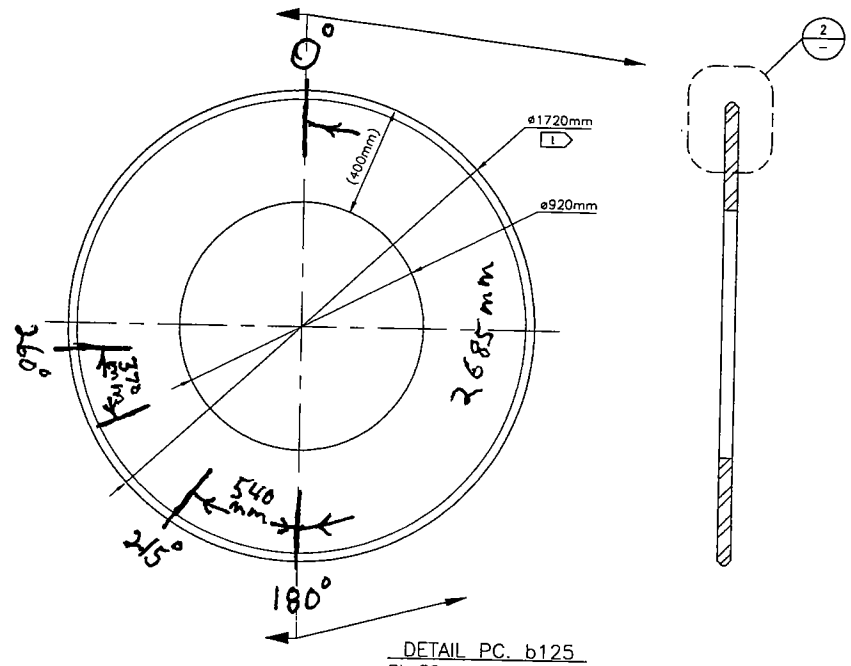

DETAIL PC. b125
PL 50mm X 1720 DIA.
UNIT WT = 1,460 LBS EACH

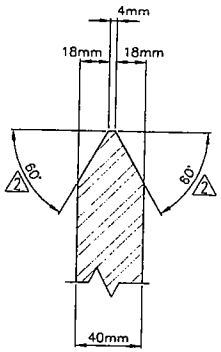

DETAIL 1

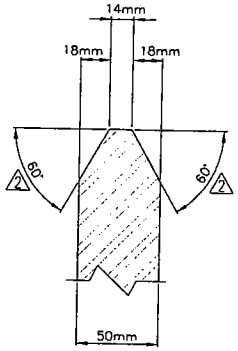

DETAIL 2

NOTE:

1. VERIFY O.D. OF STIFFENING RING WITH I.D. OF ROLLED TUBE.

DISTRICT	COUNTY	ROUTE	KILOMETER POST TOTAL PROJECT	BRIDGE NO.	CALTRANS CONTRACT NO.
04	SF	80	13.2/13.9	34-0006L/R	04-0120F4

CALTRANS SHEETS 841 THRU 845
DESIGN REF: HINGE K DETAILS NO. 1 & NO. 2

Oregon Iron Works, Inc.

CAGE CODE	DRAWN	CHECKED	DATE	W/O
5Y009	JEC/HAG	DC	4/4/07	

SAN FRANCISCO OAKLAND BAY BRIDGE EAST SPAN SEISMIC SAFETY PROJECT

SELF-ANCHORED SUSPENSION BRIDGE (SUPERSTRUCTURE & TOWER)
HINGE K PIPE BEAM

FUSE BEAM RING STIFFENER

ZONE	REV.	DATE	DESCRIPTION	DRWN BY	CHK'D BY	APPRV'D BY	APPRV'D DATE
	2	2/4/08	REVISE ANGLE PER OIW	JEC	BP		
	1	9/26/07	REVISE PER APPROVAL	JEC	JC		
	0	4/4/07	FOR APPROVAL	HAG	DC		

THE INFORMATION / DATA CONTAINED ON THIS DRAWING / FILE / DOCUMENT (WHETHER IN ELECTRONIC OR HARD FORMAT AND COPY) CONTAINS PROPRIETARY AND CONFIDENTIAL INFORMATION OF OREGON IRON WORKS, INC. (OIW), 9700 SE LAWNFIELD ROAD, CLACKAMAS, OREGON. THE DISCLOSURE, RELEASE, DISTRIBUTION, OR UNAUTHORIZED USE OF THIS INFORMATION / DATA WITHOUT THE EXPRESS WRITTEN CONSENT OF OIW IS EXPRESSLY PROHIBITED.

NEXT ASSEMBLY: 2244-123

JOB # – BID ITEM – DRWG NO.: 2244-125

REV. 2

OREGON IRON WORKS, INC.
9700 S.E. LAWNFIELD ROAD • CLACKAMAS, OREGON 97015
TELEPHONE (503) 653-6300 • FAX (503) 653-5870

WELD REPAIR REPORT

Non-Critical

WRR No: 2244-11

Project: SF0BB Hinge K Pipe Beam Job: 2244 Date: 3/31/09

Piece Mark: b125 Dwg No: 2244-123-sht 1 of 2 Rev No: 4

Sub - Assembly No: Sub-assembly not ID at this time (D3147-7) Dwg No: 2244-123-sht 2 of 2 Rev 3

Material - Type/Size: PL 50mm X 1720mm Dia. Weld Joint I.D. WM3-02, WM3-03

Material Specification: HPS 485 W Type/Grade/Class: HPS 485W

Reason for Weld or Material Repair Receipt Insp. ☐ In process Insp. ☑ Fab Repair ☐

b125 put on hold due to NCR OIW-0011 for using too small weld wire .045 (1.2mm).
WPS 3046 requires plus or minus one wire dia. from 1/16 (1.6mm) wire.
Part has weld metal added in 3 areas see attached map for locations

will be completed with WPS 3049 R-1

Indication Revealed by Production.

QC Inspector Rob Walters

Disposition - Check Each Box Which is Applicable to Required Repair:

Remove Portion of Weld/Base Metal ☐ Remove Entire Weld ☐

Other:

1.) Add weld metal as required.
2.) VT, MT the bevel prep
3.) Perform final dimensional check
4.) Do an MT acceptance report
5.)

NDE Procedure: QC 113 Rev 3 a) Rev:

QC Manager: Thomas C Tomonto Date: 3/31/09

Code: AWS D1.5 Edition: 2002

Defect Removal Method: Thermal Gouging Preheat:

Preweld NDE Results: Report: N/A Performed by:

Final Inspection - Gouge Only

Weld ID:
Weld Proc:
Welder ID:
VT Results:
NDE Results
NDE by:
CWI#

Final Inspection - New Weld

Weld ID:
Weld Proc:
Welder ID:
VT Results:
NDE Results
NDE by:
CWI#

WPS 3046

* NOTE: RING STIFFNER BUILD UP IS IN PROGRESS

FOR PARTS LIST SEE 2244-PL-101

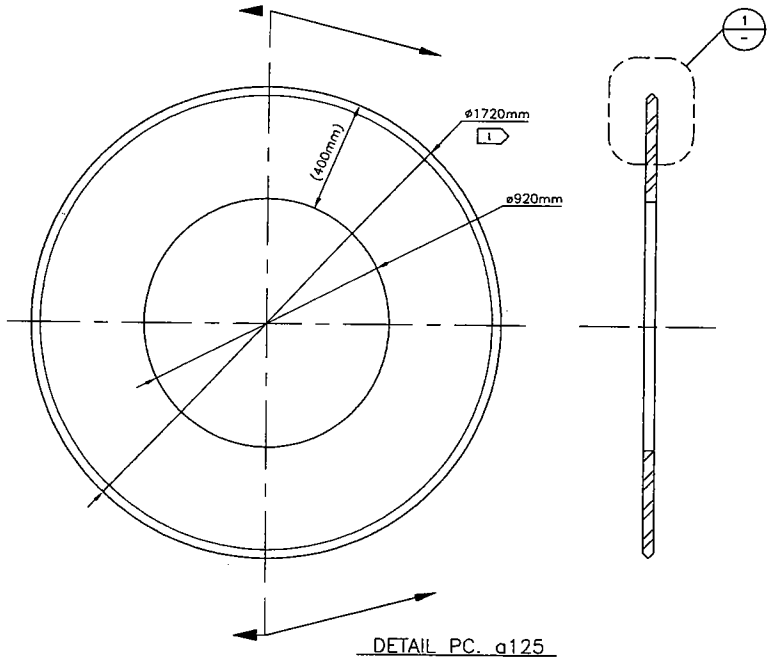

DETAIL PC. a125
PL 40mm X 1720 DIA.
UNIT WT = 1,168 LBS EACH

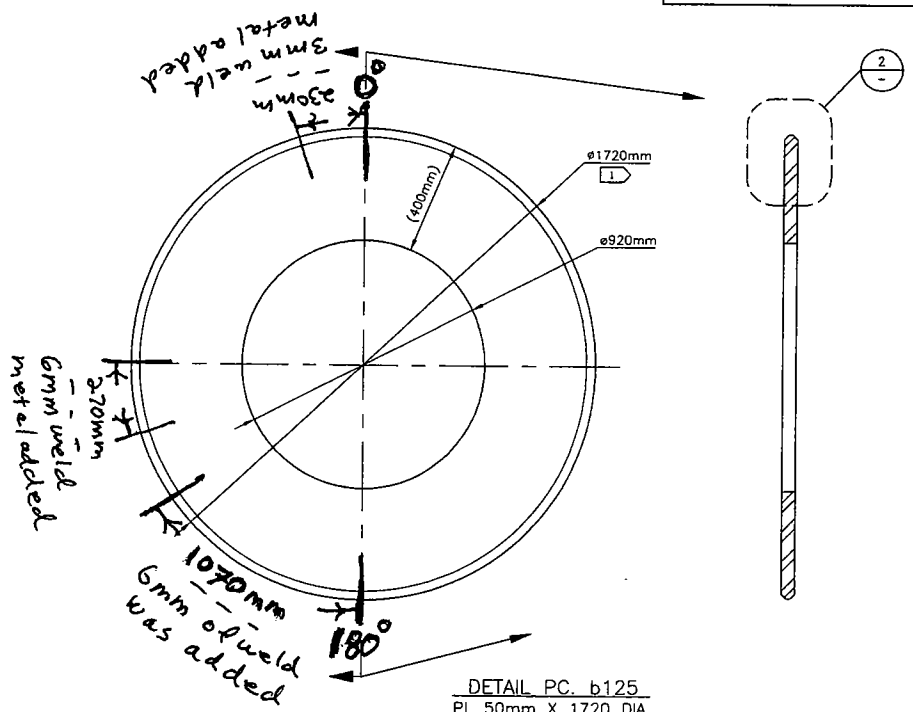

DETAIL PC. b125
PL 50mm X 1720 DIA.
UNIT WT = 1,460 LBS EACH

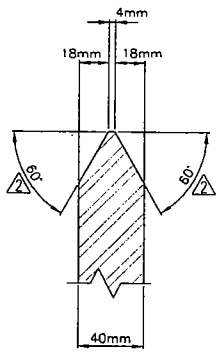

DETAIL 1 -

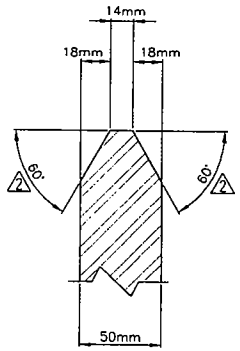

DETAIL 2 -

NOTE:

1. VERIFY O.D. OF STIFFENING RING WITH I.D. OF ROLLED TUBE.

DISTRICT	COUNTY	ROUTE	KILOMETER POST TOTAL PROJECT	BRIDGE NO.	CALTRANS CONTRACT NO.
04	SF	80	13.2/13.9	34-0006L/R	04-0120F4

CALTRANS SHEETS 841 THRU 845
DESIGN REF: HINGE K DETAILS NO. 1 & NO. 2

Oregon Iron Works, Inc.

CAGE CODE	DRAWN	CHECKED	DATE	W/O
5Y009	JEC/HAG	DC	4/4/07	

SAN FRANCISCO OAKLAND BAY BRIDGE EAST SPAN SEISMIC SAFETY PROJECT

SELF-ANCHORED SUSPENSION BRIDGE (SUPERSTRUCTURE & TOWER)
HINGE K PIPE BEAM

FUSE BEAM RING STIFFENER

ZONE	REV.	DATE	DESCRIPTION	DRWN BY	CHK'D BY	APPRV'D BY	APPRV'D DATE
	2	2/4/08	REVISE ANGLE PER OIW	JEC	BP		
	1	9/26/07	REVISE PER APPROVAL	JEC	JC		
	0	4/4/07	FOR APPROVAL	HAG	DC		

THE INFORMATION / DATA CONTAINED ON THIS DRAWING / FILE / DOCUMENT (WHETHER IN ELECTRONIC OR HARD FORMAT AND COPY) CONTAINS PROPRIETARY AND CONFIDENTIAL INFORMATION OF OREGON IRON WORKS, INC. (OIW), 9700 SE LAWNFIELD ROAD, CLACKAMAS, OREGON. THE DISCLOSURE, RELEASE, DISTRIBUTION, OR UNAUTHORIZED USE OF THIS INFORMATION / DATA WITHOUT THE EXPRESS WRITTEN CONSENT OF OIW IS EXPRESSLY PROHIBITED.

NEXT ASSEMBLY: 2244-123

JOB # - BID ITEM - DRWG NO.: 2244-125

REV. 2

Magnetic Particle & Visual Examination Report		DATE:	Tuesday, March 31, 2009
PROJECT		OIW Report Number:	
SFOBB Hinge K Pipe Beam		2244-MT-112	
Job #	2244	Reference Previous Report #	
Item	b125, a124-3	N/A	
Drawing	2244-123 sht 1 of 2 Rev4		

*** Welds listed below~ 100% FVT, Final examination unless otherwise noted.**

Part / Weld Identification	Visual Inspection		NDE			Requirement / NOTE
	Accept	Reject	Accept	Reject	%MT	
b125, Ht# D3147-7	X		X			The weld build-up is currently being processed. MT of one side is done
						WPS 3046 was used w/.045 wire
						Also, reference WRR 2244 11

~Comments~

Length of Weld End			Weld Joint WM3-02, WM3-03				
Length of Reject None			Welder ID None				
Procedure #	QC~113 Rev. 3		Current:	AC	x	DC	
Spec./Standard #	AWS D.5 2002		Carbon Steel				
Equipment/Model:	Parker Probe / DA~400		Serial #	14737			
Pole Spacing:	8"max	Method Type:	Dry Visible Powder	Mfr / Color	Circle Systems / 63, Red		

Inspector # 1:	Rob Walters	Signature:	[signature]
CWI #	98050691		
NDE Certification:	Level II	Dates:	3/31/2009
Inspector # 2:		Signature:	
CWI #			
NDE Certification:	Level II	Date:	
Inspector # 3:		Signature:	
CWI #			
NDE Certification:	Level II	Date:	
Reviewed By	QCM	Signature:	[signature]
		Date:	3/31/09

AMERICAN BRIDGE/FLUOR ENTERPRISES, a JV
P.O. BOX 23223 Oakland, CA 94623
Phone (510) 419-0120 / Fax (510) 839-0666

NCR PROPOSED RESOLUTION

To: CALTRANS - SAS Superstructure
333 Burma Road
Oakland CA 94607

Attention: Pursell, Gary
Resident Engineer

Ref: 05.03.06-000202

Subject: NCR No. OIW-0011

Dated: **20-Nov-2009**

Contract No.: 04-0120F4
04-SF-80-13.2 / 13.9

Job Name: SAS Superstructure

Document No.: **ABF-NPR-000428 Rev: 00**

Contractor's Proposed Resolution:

Reference Resolution: Supporting heat calculations for the resolution of NCR-000234 are attached. OIW requests closure of this NCR.

Supporting heat calculations for the resolution of NCR-000234 are attached. OIW requests closure of this NCR.

Submitted by: Bowers, James

Attachment(s): ABF-NPR-000428R00;

Caltrans' comments:

Status: CLO

Date: 03-Feb-2010

The heat input calculations comply with WPS 3046R3 provided in ABF-SUB-000550R12.

The NCR is resolved.

Submitted by: Collins, Warren

Date: 03-Feb-2010

Attachment(s):

OREGON IRON WORKS, INC.
9700 S.E. LAWNFIELD ROAD • CLACKAMAS, OREGON 97015
TELEPHONE (503) 653-6300 • FAX (503) 653-5870

Date: November 19,2009

HINGE K PIPE BEAMS
Contract No. 04-0120F4
NCR - 000234 / OIW - 0011

Description: Supporting Heat Input Calculations for resolution of NCR-0011 as requested, November 18, 2009 by Mohammad Fatemi.

Reference Documents:

***State NCR Report No. NCR-000234, dated 19-Mar-2009.**

***OIW Transmittal TL-224-00416 dated April 1,2009 including OIW SL-2244-00054, dated April 1, 2009. Including Weld Repair reports, MT reports.**

***OIW Transmittal TL-224-00414 dated May 26,2009 Weekly Inspection Report for 3.16.09 thru 3.20.09**
***OIW WPS 3046 Rev 3**

Heat Input Calculation, AWS D1.5, 2002, Section 5.12:

$$\text{Heat Input (Kilojoules/mm)} = \frac{\text{Amperage x Voltage x 0.06}}{\text{Travel Speed (mm/minute)}}$$

Shop Observation data from WRR 3.16.09 thru 3.20.09

Actual Amps: 220 Actual Volts: 26

Travel Speed from WPS 3046 Rev 3 = 191 - 228 mm/ minute

Resulting Heat input range: 191 mm/minute = 1.79 Kj/mm
228 mm/minute = 1.50 Kj/mm

Acceptable Heat input range per Special Provisions: 1.5 minimum to 3.5 maximum Kj/mm

Sincerely,

Tom Tomovick
OIW, QCM

DEPARTMENT OF TRANSPORTATION
DIVISION OF ENGINEERING SERVICES
Office of Structural Materials
Quality Assurance and Source Inspection

Bay Area Branch
690 Walnut Ave.St. 150
Vallejo, CA 94592-1133
(707) 649-5453
(707) 649-5493

Contract #: 04-0120F4
Cty: SF/ALA Rte: 80 PM: 13.2/13.9
File #: xx.25A

QUALITY ASSURANCE -- NON-CONFORMANCE RESOLUTION

Location: Clackamas, Oregon **Report No:** NCS-000381
Prime Contractor: American Bridge/Fluor Enterprises, a JV **Date:**
Submitting Contractor: Oregon Iron Works Clackamas, Or. **NCR #:** OIW-0011

Type of problem:

Welding	☑	**Concrete**	☐	**Other**	☐	
Welding	☐	**Curing**	☐	**Procedural**	☐	**Bridge No:** 34-0006
Joint fit-up	☐	**Coating**	☐	**Other**	☐	**Component:**
Procedural	☑	**Procedural**	☐	**Descripton:**		

Date the Non-Conformance Report was written: 19-Mar-2009

Description of Non-Conformance:

OIW's Quality Control did not identify that OIW production has exceeded the welding electrode diameter limitations as listed in Table 5.3 by decreasing the electrode diameter by more than one standard size. The welding was performed on interior stiffener rings to HPS 485 Pipe Beam Fuse (Pc, Mk a124-3). Welding procedure specification (WPS) used during the build up welding was WPS No. 3046 Rev 3. WPS 3046 is for Hobart FCAW filler metal 1.6mm (1/16") diameter. OIW actually used Hobart FCAW .045" (1.2mm) diameter electrode. OIW does not have an approved WPS for the .045" diameter welding electrode nor have they performed a PQR to support the welding.

OIW production performed welding build up (due to the gap tolerance exceeding 5mm) on interior ring stiffener MK#a125 and MK#b125. Length of weld build up that was deposited was approximately 890 mm (a125) and approximately 3,320mm (b125). Weld joints numbers are listed as WM3-06, WM3-07, WM3-02 &WM3-03.

Contractor's proposal to correct the problem:

Unknown at this time.

Corrective action taken:

Did corrective action require Engineer's approval? ☐ **Yes** ☑ **No**
If so, name of Engineer providing approval: **Date:**
Is Engineer's approval attached? ☐ **Yes** ☑ **No**

Comments:

This report is for the purpose of determining conformance with the contract documents and is not for the purpose of making repair or fit for purpose recommendations. Should you require recommendations concerning repairs or remedial efforts please contact , who represents the Office of Structural Materials for your project.

QUALITY ASSURANCE -- NON-CONFORMANCE RESOLUTION

(Continued Page 2 of 2)

Inspected By:	Fatemi,Mohammad	Quality Assurance Inspector
Reviewed By:	Fatemi,Mohammad	QA Reviewer