04-0120F4
04-SF, ALA-80-
12.2/14.3, 0.0/2.7

SFOBB East-Span
Seismic Retrofit
Project (SAS)

STATE OF CALIFORNIA
DEPARTMENT OF TRANSPORTATION

# Assistant Resident Engineer Report

Robert Kobal Week of 2013-4-29

**SAS Bridge Travelers/Skyway cleanup**

**Mon 2013-4-29**
Attended general staff meeting.

Attended ABF/CT senior staff meeting.

Attended Champions meeting.

Attended make-up Safety Standown meeting.

Worked on Skyway traveler decking material inventory for CCO 272 and the YBITS project.

**Tue 2013-4-30**
Attended corridor coordination meeting

Worked on traveler test procedure, CCO 272 pricing, CCO 317, and checking the bridge air line hookup at the YBI substation and on the bridge.

**Wed 2013-5-1**
Attended the Pre SSO items status meeting.

Worked on bridge air line hookup at the YBI substation and on the bridge.

Met with METS to discuss next steps in investigating water in the Skyway bikepath. METS boroscope investigation of the path of water into the bikepath identifies a path through cope holes from one cell to another except through one stiffener plate. Some of the video show possible corrosion coming from the area where the bikepath panel joint cover plate screws are, however the investigation last week where these screws were removed did not provide conclusive evidence that water is penetrating through these holes. They want to do another smoke test to see if additional openings can be identified. A plan is proposed (see attached) and work is planned for the first week of June.

Worked on Traveler testing plan.

'13 JUN-4 AM10:16 26694

**Thur 2013-5-2**
Attended Safety meeting.

Prepared for and lead the Traveler meeting- see meeting notes. I incorporated the group's comments into the Bikepath traveler testing plan.

ABF has modified the traveler erection plan to use a different crane for the SAS travelers. Because this is the contractor's means and methods, the erection submittal is not required to be revised.

ABF reinstalled the bikepath traveler balcony floor beams per RFI 3288 direction. (CCO 96)

I directed ABF to remove the water out of the remaining Skyway bikepath deck panels now that there is traveler access.

**Friday 2013-5-3**
Prepared for Bikepath traveler testing next week.

Reviewed CCO 315 plan sheets.

ABF completed assembly of the traveler supplementary platforms and began disassembling so that they could be stored and hoisted on the SAS travelers, anticipated for next week.

Robert Kobal
Senior TE

Robert Kobal/HQ/Caltrans/CAGov
04/30/2013 03:54 PM

To akreger@sasbridge.com, andrew.baumberger@tylin.com, aprchlik@altavistasolutions.com, Bill Zanetich/D04/Caltrans/CAGov@DOT, Christopher Ade Akinsanya/HQ/Caltrans/CAGov@DOT, Bill Casey/D04/Caltrans/CAGov@DOT, james.duxbury@tylin.com

cc

bcc

Subject Water in Skyway bikepath resolution status meeting- SAS small conference room

Confirming that we will meet this wednesday, 10:30, SAS small conference room
Agenda:
discuss METS proposed investigation plan

Bikepath Investigation Proposal.pdf

discuss results of recent investigation
Next steps?

TEST PLAN DISCUSSION

NEED DIMENSIONS FOR HOLE LOCATIONS - TO TYLIN

USE MCM - BILL HOWE

- NEED METAL TO CLOSE HOLE.
- SEAL WELD.

- MAY 28 TARGET TO START.

BIKEPATH WATER IN PANELS MTG 5/1/13

# Please Sign in

| Name | Agency/ Functional unit |
| --- | --- |
| ROB KOBAL | CT |
| YONGXIN LIU | CT |
| ADAM KREGER | METS. |
| Mahbub Hossain | CT |
| Doug COE | CT |
| Aaron Prchlik | METS |
| ANDREW BAUMBERGER | |
| BILL HOWE | CT |

| MARK | DATE | DESCRIPTIONS | BY | CH'D | CCO# |
|---|---|---|---|---|---|
| 6 | 01/05/04 | SPECIFY CHAMFER IN DIAPHRAGM | MS | SS | |
| 5 | 12/15/03 | REVISE WELDS TO BE CONSISTENT WITH RAILING DETAILS | MS | SA | |
| 4 | 12/15/03 | ADD END DIAPHRAGM STIFFENER PLS | MS | SA | |
| 3 | 12/15/03 | REVISE DETAILS FOR ADDITIONAL ERECTION TOLERANCE | MS | SA | |

REVISIONS

CONTRACT CHANGE ORDER NO. ____
SHEET ____ OF ____

Caltrans Metric

3

| DIST. | COUNTY | ROUTE | KILOMETER POST TOTAL PROJECT | SHEET NO. | TOTAL SHEETS |
|---|---|---|---|---|---|
| 04 | SF, Ala | 80 | 13.9/14.3, 0.0/1.6 | 869R3 | 978 |

REGISTERED ENGINEER - CIVIL
6-4-01
PLANS APPROVAL DATE

REGISTERED PROFESSIONAL ENGINEER Madan Kumar Sah No. 59203 Exp. 06/30/03 CIVIL STATE OF CALIFORNIA

The State of California or its officers or agents shall not be responsible for the accuracy or completeness of electronic copies of this plan sheet.

T.Y. LIN / MOFFATT & NICHOL
825 BATTERY STREET
SAN FRANCISCO, CA 94111

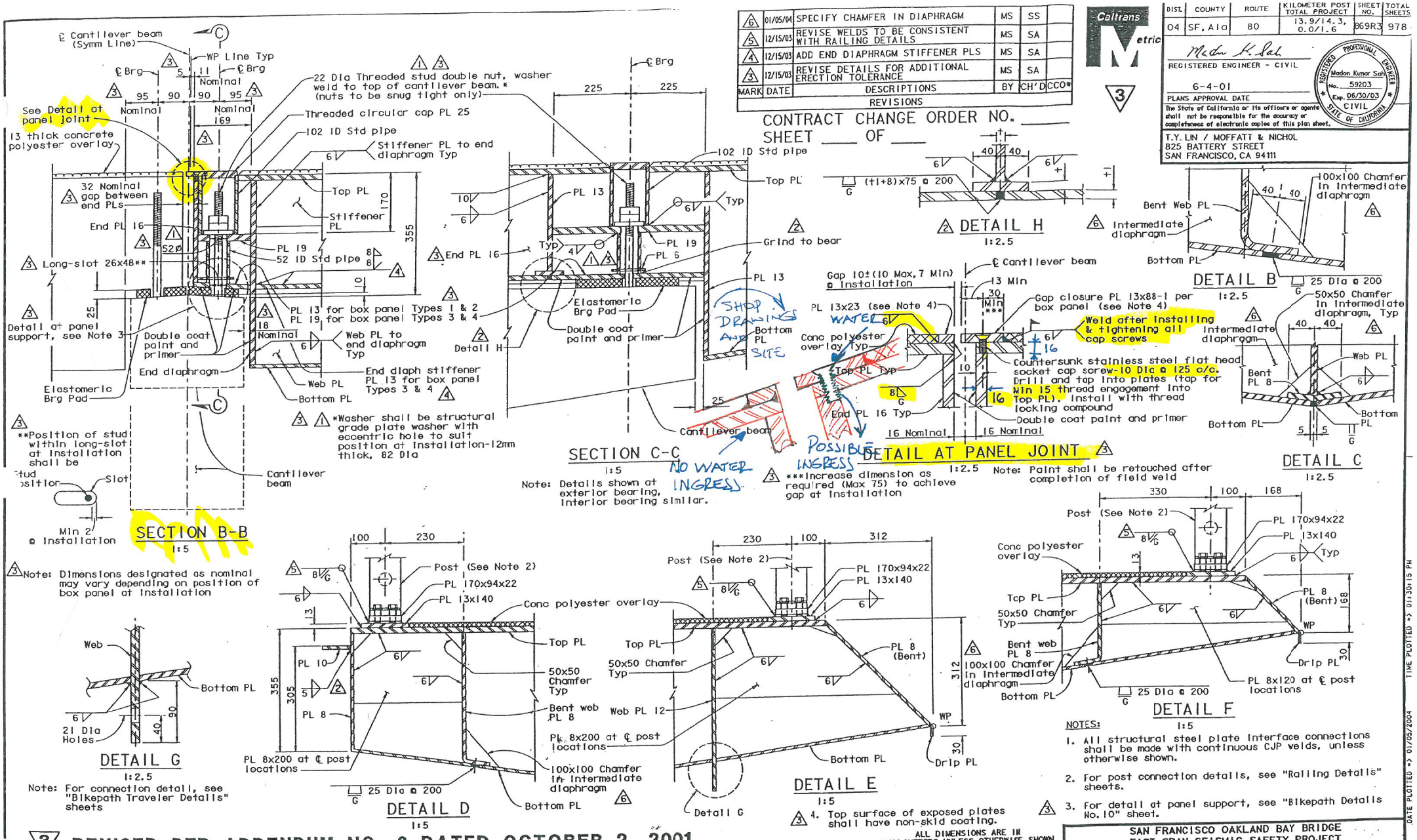


NOTES:

1. All structural steel plate interface connections shall be made with continuous CJP welds, unless otherwise shown.
2. For post connection details, see "Railing Details" sheets.
3. For detail at panel support, see "Bikepath Details No. 10" sheet.
4. Top surface of exposed plates shall have non-skid coating.

ALL DIMENSIONS ARE IN MILLIMETERS UNLESS OTHERWISE SHOWN

3 REVISED PER ADDENDUM NO. 3 DATED OCTOBER 2, 2001

| MARK | DATE | DESCRIPTIONS | BY | CH'D |
|---|---|---|---|---|
| 2 | 01/16/03 | REVISE WELDS | MS | SS |
| 1 | 01/16/03 | PROVIDE OVERSIZE HOLES FOR BOX PANEL CONNECTION | MS | SS |

DESIGN OVERSIGHT 1/9/04
SIGN OFF DATE

DESIGN BY M. Sah CHECKED C. Werts
DETAILS BY F. Hung CHECKED C. Werts
QUANTITIES BY K. Cormier CHECKED J. Leventini

PREPARED FOR THE STATE OF CALIFORNIA DEPARTMENT OF TRANSPORTATION

Sajid Abbas
PROJECT ENGINEER

BRIDGE NO. 34-0006L/R
KILOMETER POST 13.9/14.3, 0.0/1.6
DISREGARD PRINTS BEARING EARLIER REVISION DATES

CU 04
EA 012021

SAN FRANCISCO OAKLAND BAY BRIDGE
EAST SPAN SEISMIC SAFETY PROJECT

SKYWAY STRUCTURES

BIKEPATH DETAILS NO. 3

SHEET 437 OF

REVISION DATES (PRELIMINARY STAGE ONLY) 5/28/98 10/20/98 11/20/98 12/20/98 01/20/99 02/20/99 11/20/99 01/05/04

Rev. Date: 5-18-98

ORIGINAL SCALE IN MILLIMETERS FOR REDUCED PLANS 0 10 20 30 40 50 60 70 80 90 100

FILE => X:\TYLin International\Mission Control\CCO-file-updates\CCO Working Files\Bikepath Details\akbwd02.dgn

USERNAME => DKWOK DATE PLOTTED => 01/05/2004 TIME PLOTTED => 01:30:15 PM

| DIST. | COUNTY | ROUTE | KILOMETER POST TOTAL PROJECT | SHEET NO. | TOTAL SHEET |
|---|---|---|---|---|---|
| 04 | SF, Ala | 80 | 13.9/14.3, 0.0/1.6 | 874R4 | 978 |

Caltrans Metric

REGISTERED ENGINEER - CIVIL

6-4-01

PLANS APPROVAL DATE

The State of California or its officers or agents shall not be responsible for the accuracy or completeness of electronic copies of this plan sheet.

REGISTERED PROFESSIONAL ENGINEER Madan Kumar Sah No. 59203 Exp. 06/30/03 CIVIL STATE OF CALIFORNIA

T.Y. LIN / MOFFATT & NICHOL
825 BATTERY STREET
SAN FRANCISCO, CA 94111

3

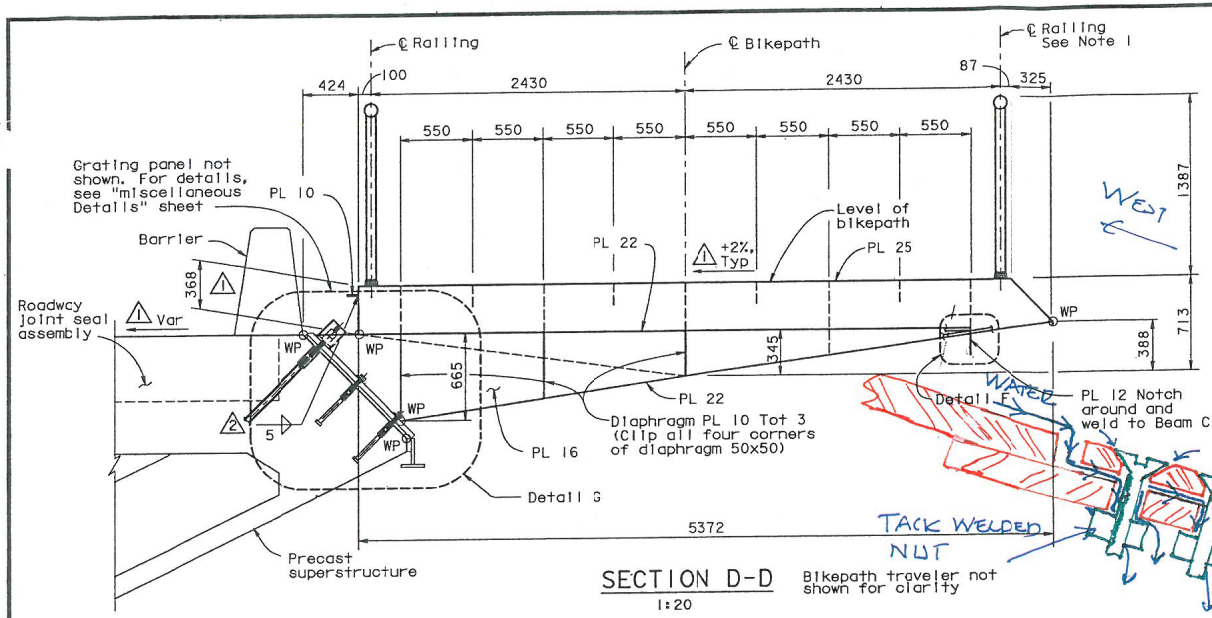


SECTION D-D
1:20

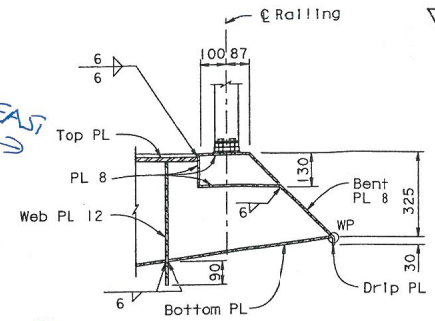


DETAIL D
1:10

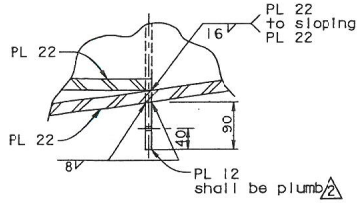


DETAIL F
1:5

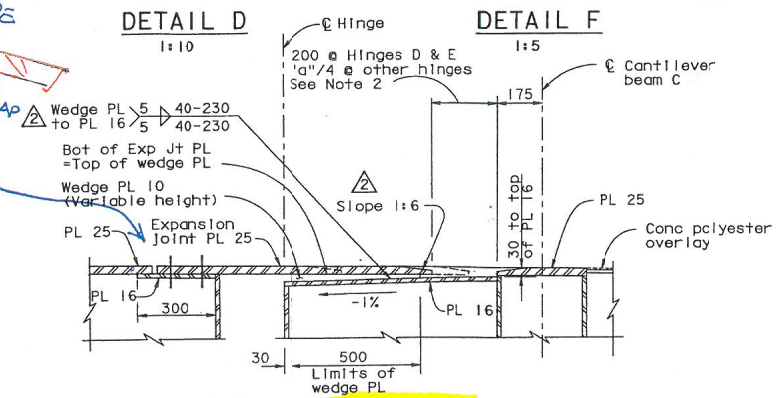


DETAIL E
1:10

4 * Provide 40x76 long-slot holes in base PL for PT bars

4 Cap for PT bars. For cap details, see "Bikepath Details No. 5" sheet

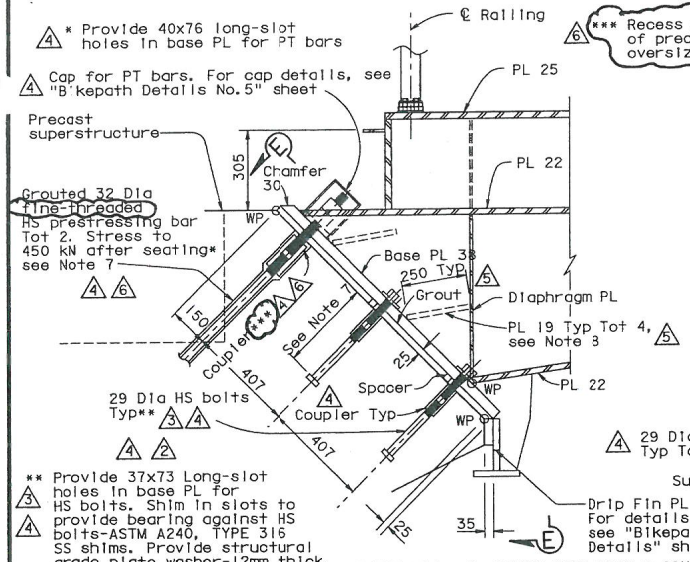


** Provide 37x73 Long-slot holes in base PL for HS bolts. Shim in slots to provide bearing against HS bolts-ASTM A240, TYPE 316 SS shims. Provide structural grade plate washer-12mm thick, 146 diameter. Hardened washer shall also be provided over the plate washer.

DETAIL G
1:10

CANTILEVER BEAM C CONNECTION TO PRECAST SUPERSTRUCTURE (CANTILEVER BEAM B CONECTION SIMILAR)

Note: For Cantilever Beam C Connection to Steel Superstructure See "Bikepath Details No. 10" sheet.

*** Recess coupler 15 Min from edge of precast segment. Provide oversize duct for the coupler

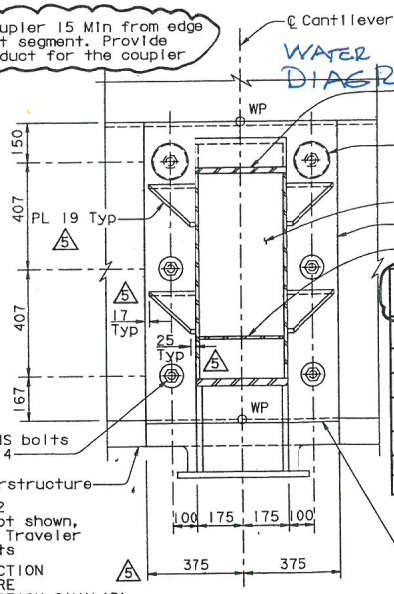


SECTION E-E
1:10

| MARK | DATE | DESCRIPTIONS | BY | CH'D | CCO# |
|---|---|---|---|---|---|
| 6 | 03/30/04 | SPECIFY FINE-THREADED PT BARS. CALLOUT OVERSIZE DUCT & RECESS FOR PT BAR COUPLERS | MS | SS | |
| 5 | 12/15/03 | ADD BASE PL STIFFENERS. REVISE WIDTH OF BASE PL | MS | SA | |
| 4 | 12/15/03 | REVISE EMBEDS AT EXPANSION JOINT | MS | SA | |
| 3 | 07/18/03 | PROVIDE OVERSIZE HOLES FOR BEAM CONNECTION | MS | SS | |
| 2 | 07/18/03 | REVISE WELD & BOLT GRIP LENGTH. CLARIFY SLOPE & PLUMB PLATE | MS | SS | |
| 1 | 10/07/02 | ADD CANTILEVER BEAM SLOPE | MS | CR | |

REVISIONS

CONTRACT CHANGE ORDER NO. ____
SHEET ___ OF ___

5 8. Stiffeners are oriented parallel to bottom PL of the cantilever beam. For spacing, see "Bikepath Details No. 9" sheet.

NOTES:

1. For railing details, see "Railing Details" sheets.
2. Dimension "a" is gap between faces of hinge segments at time of installation of bikepath panels. See "Expansion Joint Details No. 1" sheet.
3. All structural steel plate interface connections shall be made with continuous CJP welds, unless otherwise shown.
4. Bikepath structure shown horizontal for convenience. Railing and railing posts on bikepath shall be plumb. (1)
5. Rails for bikepath traveler shall be plumb. (1)
6. ~~Shorten grip of lower bolt to 300 in Frame 4.~~ (2)
7. For length and anchorage of PT bars and for length of HS bolts, see appropriate "Hinge Details" sheets. (4)

3 REVISED PER ADDENDUM NO. 3 DATED OCTOBER 2, 2001

4 Note: Slot in base PL not shown. Washers are schematically shown (NTS).

ALL DIMENSIONS ARE IN MILLIMETERS UNLESS OTHERWISE SHOWN

SAN FRANCISCO OAKLAND BAY BRIDGE
EAST SPAN SEISMIC SAFETY PROJECT

SKYWAY STRUCTURES

BIKEPATH DETAILS NO. 8

DESIGN OVERSIGHT 4/8/04

SIGN OFF DATE

Rev. Date: 5-18-98

| | | | |
|---|---|---|---|
| DESIGN | BY M. Sah | CHECKED C. Werts | |
| DETAILS | BY F. Hung | CHECKED C. Werts | |
| QUANTITIES | BY K. Cormier | CHECKED J. Levantini | |

PREPARED FOR THE STATE OF CALIFORNIA DEPARTMENT OF TRANSPORTATION

Sajid Abbas
PROJECT ENGINEER

BRIDGE NO. 34-0006L/R
KILOMETER POST 13.9/14.3, 0.0/1.6

CU 04
EA 012021

ORIGINAL SCALE IN MILLIMETERS FOR REDUCED PLANS 0 10 20 30 40 50 60 70 80 90 100

DISREGARD PRINTS BEARING EARLIER REVISION DATES

REVISION DATES (PRELIMINARY STAGE ONLY) 02/15/00 05/22/00 11/27/00 12/26/00 02/26/01 06/29/01 10/22/02 07/18/03 12/15/03 03/30/04

SHEET 442 OF

# SFOBB SKYWAY BIKEPATH
# CORROSION SOURCE INVESTIGATION AND EVALUATION

## PURPOSE

1. Identify likely source/s of the air/water that resulted in presence of water within the box girders.
2. Characterize the cause and extent of the ongoing corrosion.
3. Recommend, as deemed necessary, means to address the source of the air/moisture, conceptual corrosion mitigation options, or steps for further investigation.

## FIELD INVESTIGATION PROCEDURE

1. Access the selected bottom soffit plate of the Skyway bikepath panels using the Traveler.
    a. This procedure will be completed on three box girders each representing a different condition:
        i. 1309AZR Held significant volume of water (greater than 50 gallons).
        ii. 1209SR Held limited amount of water (less than 5 gallons).
        iii. 1209F Not known to contain any water.
    b. Additional panels will be tested only if necessary. Once conclusive evidence of the infiltration source is identified, testing will commence. The number of panels tested will be dependent upon obtaining such evidence.
2. Drill 2ea – 50mm and 1ea – 300 mm diameter openings at selected locations on bottom soffit plate (See Attachment 1).
    a. To avoid contaminating the steel disc from drilling lubricant, use only selected drilling lubricant which does not contain any chlorine-, sulfur-, or nitrogen-bearing components.
    b. Preserve and pedigree the steel discs from making the openings for laboratory analysis.
    c. Utilize borescope with articulating head to inspect panel interior.
3. Connect 2" hose of theatrical fog testing equipment (See Attachment 2 for equipment information) to Hole #1 and begin to introduce fog substance (See Attachment 3 for MSDS) into the chamber while Hole #2 is still open.
4. Once fog has infiltrated the entire box segment and has begun to exit from Hole #2, it will be plugged with a valve and pressure regulator.
    a. The regulator will be monitored such that internal pressure never exceeds 2.0 PSI.
5. The entire outside surface of the bikepath will be inspected for escaping fog.

## LABORATORY ANALYSIS OF STEEL DISCS

1. Observe visually for extent of corrosion product and patterns in the topography of the corrosion product indicative of pitting/metal loss.
2. Examine using light and scanning electron microscopes to evaluate extent of pitting and determine elemental composition of corrosion product using scanning electron microscopy with energy dispersive x-ray spectroscopy.
3. Analyze corrosion product using x-ray diffraction to determine crystalline composition.
4. Remove corrosion product using an acid immersion procedure from ASTM G1 to allow observations of the underlying substrate and measure degree of metal loss/pitting.
5. Identify and quantify anions present in the water samples using ion chromatography. From the information you have sent, we noticed that the water was tested for iron and chloride content only.

**ANALYSIS AND REPORT PREPARATION**

1. Analyze the data obtained from the field investigation and laboratory analysis.
2. Prepare a report including results of the testing, findings, conclusions and recommendations. The recommendations shall include means to address the source of the air/moisture, conceptual corrosion mitigation options or steps for further investigation as deemed appropriate.

Attachment A: Drilling Layout
Attachment B: Theatrical Fog Testing Equipment
Attachment C: Theatrical Fog MSDS

# Attachment A: Drilling Layout

Note 1: Holes shall be drilled no closer than 4" from all plate stiffeners
Note 2: Lubricants used shall contain no chlorine, sulfur, or nitrogen

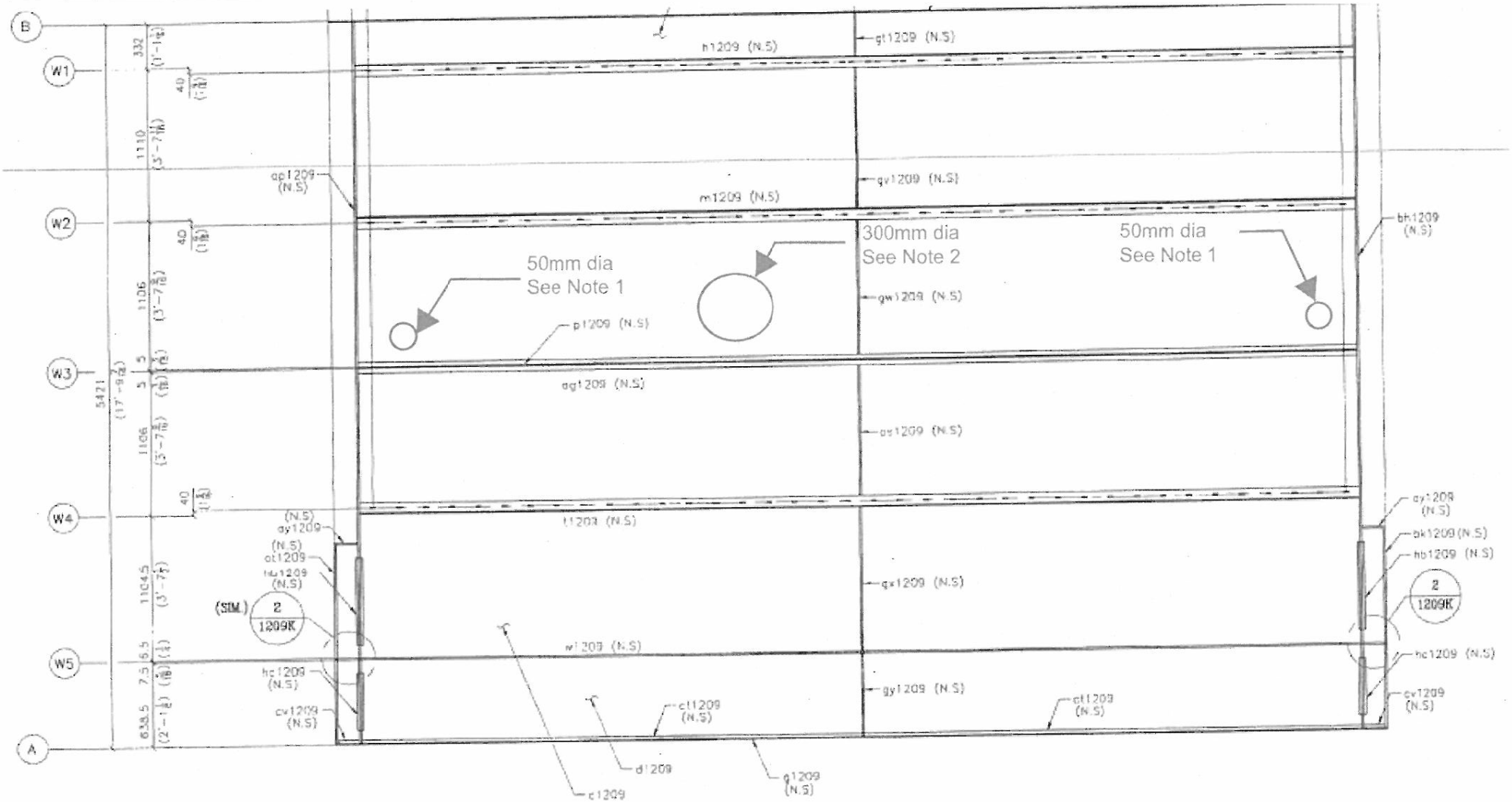


DEVELOPED BOTTOM PLAN

# Attachment B: Theatrical Fog Testing Equipment

## CORONA VICOUNT SMOKE GENERATOR

The **VICOUNT** smoke generator represents state-of-the-art technology and uses only a fraction of the amount of fluid used in conventional water-based generators. Capable of continuous smoke output and remote operation, the Vicount is ideally suited for a full range of applications: Fire fighting, evacuation training, airflow visualization, leak detection, etc.

### THE SMOKE

- Dry and safe
- Extremely persistent
- Non toxic, non irritant, non contaminant
- Non conductive, non corrosive, non flammable
- Non staining
- Leaves no residue
- Resistant to high temperatures - 180° C (355° F)
- Harmless to computers, cameras, electronics and other sensitive equipment and machinery
- Can be ducted - aided by a fan if appropriate
- Minimal use of smoke oil
- Tested by the Canadian Centre for Occupational Health and Safety
- Fluid meets USP purity standards

### THE GENERATOR

- Compact and robust
- Precision machined, solid steel heater block with removable spiral form core for easy servicing
- Two cartridge heaters provide uniform heating throughout block
- Heat sensing at block core
- No recycle time
- Variable smoke output (zero - maximum)
- Solid state switching with digital temperature control
- Fluid level sight-glass
- Automatic self purge (zero maintenance)
- CE accreditation
- ISO 9001: 2000 Quality assurance

### PRINCIPLES OF OPERATION

Corona smoke oil is broken down into a fine mist by adding an inert gas such as $CO_2$ or Nitrogen. The mist is passed under pressure into a heat exchanger, where it vaporizes. The vapor condenses on reaching the air to form a visible, dry, dense "smoke". The liquid particles produced by the Vicount have a diameter much smaller than that of its competitors. They hold less than one hundredth the amount of liquid and drop at a rate that is fourteen times slower. The smoke produced by the Vicount is resistant to temperatures of up to 180° C (355° F), making the unit ideal for training in heated areas or chambers where water-based smokes will quickly break down. Smoke fluid consumption is reduced by up to 90% when compared with water-based smokes in similar circumstances, while creating a much denser, smoke filled environment. The Vicount can produce smoke at maximum output continuously. No re-heating cycle is required.

| SPECIFICATIONS | VICOUNT 1300 1.1 kW | VICOUNT 5000 1.1kW | VICOUNT 5000 2.2kW |
|---|---|---|---|
| Weight: | 26lbs. (12kg) | 37lbs. (17kg) | 38lbs. (17.25kg) |
| Size (H x W x L): | 14½" x 7" x 16"<br>(37 x 18 x 41 cm) | 21½" x 7" x 16"<br>(54 x 18 x 41 cm) | 21½" x 7" x 16"<br>(54 x 18 x 41 cm) |
| Smoke output: at 3 feet (1m) visibility: | • 0-5,300 cu.ft . ($150m^3$)/min | • 0-5,300 cu.ft . ($150m^3$)/min | • 0-10,240 cu.ft. ($290m^3$)/min |
| Smoke particle size: | 0.2 - 0.3 micron | 0.2 - 0.3 micron | 0.2 - 0.3 micron |
| Running time at max. output: | 40 minutes | 2 hours 25 minutes | 1 hour 45 minutes |
| Fluid tank capacity: | 2 pints (1300 ml) | 10 pints (4800 ml) | 10 pints (4800 ml) |
| Oil consumption at 120 psi: | 4.2 pints (1900 ml)/hour | 4.2 pints (1900 ml)/hour | 7.6 pints (3600 ml)/hour |
| Power consumption: | 1.1 KW | 1.1 KW | 2.2 KW |
| Power supply: | 110V, 60 Hz, 11A | 110V, 60 Hz, 11A | 110V, 60 Hz, 22A |
| Warm up time from cold: | 3 minutes | 3 minutes | 10 minutes |

**STANDARD FEATURES:**

Digital controls;15 foot (4.5 m) cable on/off remote switch;
automatic self purge system; thermal cut out;
pressure relief valve; gas and oil filters.

**OPTIONS:**

2" or 3" (52 or 75mm) ducting tube attachment adapter;
flexible tubing; regulator; fan; wireless remote control.

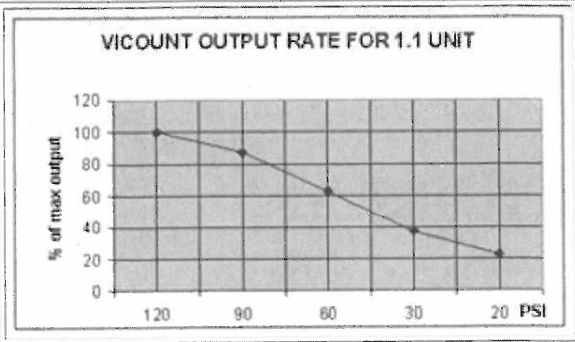


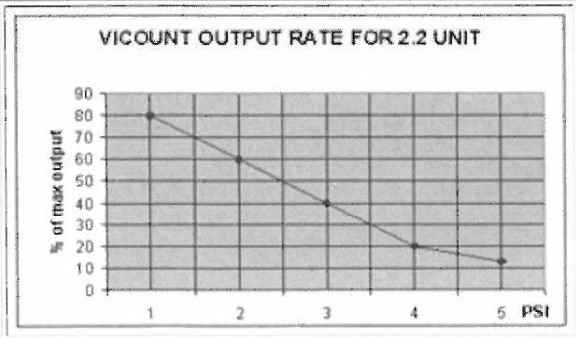

Attachment C: Fog MSDS

# MATERIAL SAFETY DATA SHEET

## PRODUCT IDENTIFICATION AND USE

Product: Corona Smoke Fluid 135 and Corona Smoke Fluid 180
Product use: Generators producing an artificial fog (Vicount series, Aviator, Artem, Aerotech, Cirrus, Sprinkler testing system)
Supplier: Corona Integrated Technologies Inc., 6215 Overstone Drive,
West Vancouver, B.C, Canada V7W 1X7.
Telephone: 1-888-878-9433
*Emergency telephone number: 1-888-878-9433*

**No hazards for emergency response are known.**

## COMPOSITION INFORMATION

**Main ingredient:** White Mineral Oil* (CAS # 8042-47-5; complies with Food and Drug Administration Regulation 178.3570 code of Federal Regulations, Title 21).

## IMMEDIATE HEALTH EFFECTS

**Eye:** Not expected to cause prolonged or significant eye irritation.
**Skin:** Contact with the skin is not expected to cause prolonged or significant irritation. Contact with the skin is not expected to cause an allergic skin response. Not expected to be harmful to internal organs if absorbed through the skin.
**Ingestion:** Not expected to be harmful if swallowed.
**Inhalation:** Not expected to be harmful if inhaled. Contains a petroleum-based mineral oil. May cause respiratory irritation or other pulmonary effects following prolonged or repeated inhalation of oil mist at airborne levels above the recommended mineral oil mist exposure limit. Symptoms of respiratory irritation may include coughing and difficulty breathing.

## FIRST AID

**Eye:** No specific first aid measures are required. As a precaution, remove contact lenses, if worn, and flush eyes with water.
**Skin:** No specific first aid measures are required. As a precaution, remove clothing and shoes if contaminated. To remove the material from skin, use soap and water.
**Ingestion:** No specific first aid measures are required. Do not induce vomiting. As a precaution, get medical advice.
**Inhalation:** No specific first aid measures are required. If exposed to excessive levels of material in the air, move the exposed person to fresh air. Get medical attention if coughing or respiratory discomfort occurs.

## FIRE AND OTHER PROTECTION ISSUES

**Classification:** OSHA Classification (29 CFR 1910.1200): Not classified by OSHA as flammable or combustible.

**NFPA Ratings:** Health: 0 Flammability: 1 Reactivity: 0

**HMIS Ratings:** Health: 0 Flammability: 1 Reactivity: 0

**Flashpoint:** (Cleveland Open Cup) 129°C (265°F) (Min)

**Autoignition:** No Data Available

**Flammability (Explosive) Limits (% by volume in air):** Lower: Not Applicable Upper: Not Applicable

**Extinguishing Media:** Use water fog, foam, dry chemical or carbon dioxide ($CO_2$) to extinguish flames.

**Protective measures:** Eliminate all sources of ignition in vicinity of spilled material.

**General Handling Information:** Avoid contaminating soil or releasing this material into sewage and drainage systems and bodies of water.

**Static Hazard:** Electrostatic charge may accumulate and create a hazardous condition when handling this material. For more information, refer to OSHA Standard 29 CFR 1910.106, 'Flammable and Combustible Liquids', National Fire Protection Association (NFPA 77, 'Recommended Practice on Static Electricity', and/or the American Petroleum Institute (API) Recommended Practice 2003, 'Protection Against Ignitions Arising Out of Static, Lightning, and Stray Currents'.

**Container Warnings:** Container is not designed to contain pressure. Do not use pressure to empty container or it may rupture with explosive force.

## PERSONAL PROTECTION CONSIDERATIONS

**Eye/Face Protection:** No special eye protection is normally required.
**Skin Protection:** No special protective clothing is normally required.

**Respiratory Protection:** No respiratory protection is normally required. If user operations generate an oil mist, determine if airborne concentrations are below the occupational exposure limit for mineral oil mist. If not, wear an approved respirator that provides adequate protection from the measured concentrations of this material.

## PHYSICAL AND CHEMICAL PROPERTIES

(the data are typical values and do not constitute a specification)

| | |
|---|---|
| **Color:** | Colorless |
| **Physical State:** | Liquid |
| **Odor:** | Petroleum odor |
| **pH:** | Not Applicable |
| **Vapor Pressure:** | <0.01 mmHg @ 37.8°C (100°F) |
| **Vapor Density (Air = 1):** | >1 |
| **Boiling Point:** | >260°C (500°F) |
| **Solubility:** | Soluble in hydrocarbons; insoluble in water |
| **Freezing Point:** | Not Applicable |
| **Melting Point:** | Not Applicable |
| **Specific Gravity:** | 0.82 - 0.86 @ 15.6°C (60.1°F) / 15.6°C (60.1°F) |
| **Viscosity:** | 7.5 cSt - 90 cSt @ 40°C (104°F) (Min) |
| **Chemical Stability:** | This material is considered stable under normal ambient and anticipated storage and handling conditions of temperature and pressure. |
| **Incompatibility:** | May react with strong acids or strong oxidizing agents, such as chlorates, nitrates, peroxides, etc. |
| **Hazardous Decomposition Products:** | None known (None expected) |
| **Hazardous Polymerization:** | Hazardous polymerization will not occur. |
| **Environmental implication:** | This material is considered inherently biodegradable. |

## TRANSPORT INFORMATION

**DOT Shipping Description:** PETROLEUM OIL, N.O.I.B.N.; NOT REGULATED AS A HAZARDOUS MATERIAL FOR TRANSPORTATION UNDER 49 CFR

**IMO/IMDG Shipping Description:** NOT REGULATED AS DANGEROUS GOODS FOR TRANSPORTATION UNDER THE IMDG CODE

**ICAO/IATA Shipping Description:** NOT REGULATED AS DANGEROUS GOODS FOR TRANSPORTATION UNDER ICAO

## REGULATORY INFORMATION

**EPCRA 311/312 Categories:**

1. Immediate (Acute) Health Effects: NO
2. Delayed (Chronic) Health Effects: NO
3. Fire Hazard: NO
4. Sudden Release of Pressure Hazard: NO
5. Reactivity Hazard: NO

**Chemical Inventories:** All components comply with the following chemical inventory requirements: AICS (Australia), DSL (Canada), EINECS (European Union), KECI (Korea), PICCS (Philippines), TSCA (United States).

**New Jersey RTK Classification:** Under the New Jersey Right-to-Know Act L. 1983 Chapter 315 N.J.S.A. 34:5A-1 et. seq., the product is to be identified as follows: PETROLEUM OIL

**WHMIS Classification:** This product is not considered a controlled product according to the criteria of the Canadian Controlled Products Regulations. Corona Integrated Technologies Inc. has no control over the management practices or manufacturing processes of parties handling or using this material. The information presented here pertains only to the product as shipped in its intended condition as described herein.

Effective Date: 8/20/2010 Date Printed: 9/21/2010

The information herein is given in good faith, but no warranty, express or implied, is made.

***For more details on main ingredient** (CAS# 8042-47-5) **see: http://chem2.sis.nlm.nih.gov/chemidplus/**

Prepared by Corona Integrated Technologies Inc.
Verified by New Concept Chemical Products LLC, 3815 Bakerview Spur #4, Bellingham, WA 98226, USA
Verified by Concept Engineering Ltd., 7 Woodlands Business Park, Maidenhead, Berks, SL6 3UA, England.

CORONA INTEGRATED TECHNOLOGIES INC.
www.smokemachines.com
6215 Overstone Drive, West Vancouver, BC, Canada V7W 1X7
Tel: 604-878-9433 admin@smokemachines.com