STATE OF CALIFORNIA
DEPARTMENT OF TRANSPORTATION

Form HC-10A (Rev. 6/80)

Job Stamp
04-0120F4
SFOBB SAS

Const. Calendar Day No. 21
Project Work Day No. 1231
Date 09/30/2009

Shift Hours Start 7:00 Stop 3:30 PM
Inspector Shift 7:00 AM to 3:30 PM

ASSISTANT RESIDENT ENGINEER'S

CONTRACTOR – ABFJV

EQUIPMENT AND/OR LABOR:

Equip. #	NO. MEN	DESCRIPTION (Of Equipment or Labor)	HOURS - ITEM NO. #38 Str. Concrete, Bridge	# 48 Bar Reinforcement Steel	#34 Pre-stress CIP Conc. at W2	CCO for VOIDS Removal	PT Forms Installation for grouting	CCO for hand rails for Labor Day	Electrical Box work			IDLE OR DOWN	REMARKS Name	Contractor
1	1	Gen. Foreman	6		2								Terry Cronk	ABF
2	1	Laborer	8										Rigiberto Campos	ABF
3	1	Elevator Operator	8										Howard Schroyer	ABF.
4	1	Pile Driver Foreman	8										Nigel Lohse	ABF
5	1	Pile Driver	8										Kurt Chaisson	ABF
6	1	Pile Driver	8										Jesse Johnasen	ABF
7	1	Operator Apprentice/oiler	8										Ross Scott	ABF
8	1	Pile Driver	3						5				Richie Yambo	ABF
9	1	Pile Driver	3						5				Jamal Whitney	ABF
10	1	Pile Driver										8	Danny Schwartz	ABF school
11	1	OEP	8										Joe Shawn	ABF
Subcontractors		SDI											See Matt's diary	
	1	Crane LR 1300	8										Help Temporary Towers also	ABF
	1	1st Man Lift	8											ABF Elec. Work, Temp towers
	1	2nd Man Lift										8		ABF
	1	Lincoln Vantage Welding M/C 768-50-4005										8		ABF
	1	Lincoln Vantage Welding M/C 768-50-4009										8		ABF at ground
	1	MQ Power Generator 220	8											ABF Main power
	1	Ingersoll Rand Air compressor 20-2183	8											ABF central
	1	Forklift Hertz Rental 544D-10	8											ABF
	1	Pickup	8											ABF
	1	Elevator	8											ABF

Weather: clear morning, 57 F low 67 high. Medium winds.

Description of Operation:

REC'D H31 OCT-15 #011209
093009

- ABF is working on clean up at ground and at the deck level.
  - ABF is using 3 dumpsters to collect the trash from formwork removal.

- ABF is performing the miscellaneous tasks.
  - Terry was building oil spill holding boxes out of 2x4s with plastic sheets for use on Temporary Towers.
  - ABF is working on electrical openings to be relocated or covered as shown on Pier W2 Detail No 7 drawing 453 of 1204.
  - ABF is building scaffolding to cut and reconcrete the existing slab of Pier W2W at ground level as shown on Pier W2 Detail 2 on drawing 448 of 1204.

- ABF continues cleaning the surfaces at the Vertical Preastressed rods and vertical strands and the blockouts for Transverse Tendons.
  - They are using water hose at north and south PT rod locations and chiselling at south end blockout.

- SDI started Friday 9/25/09 to insert the strands though the top bearing plates.
  - There had some initial problems as the plasting protective sleeve with grease on the strands was getting shaved off little bit.
  - As of Monday, SDI has installed about 50 % of the strands in the 1st hole of Vertical Tied Downs.
  - The progress seems to be too slow and the pushing the strands alone may take few months.
  - This morning they seem to have cleared major peoblems and it appears they can finish one vertical PT with 61 strands in almost 1 day. As of today they installed all remaining strands in the 1st hole and 23 strands in the 2nd hole.
- SDI instlled the shim plates for the bottom bearing plates in the north foundation well yesterday.
- SDI has its own Generator & Forklift on top and all the equipment needed to perform its operations.

- Gil, Lalit and Matt talked to Jim Davidson.
  - He clarified that there is no pour scheduled for tomorrow as Terry informed yesterday.
  - Jim was informed that the transverse tendons CT 11 to 15 needs to be protected against corrosion as these will stay there for 2-3 years.
    - Jim will look in to it.

Additional Work at or outside of the W2 Site:

- CC Myers has started to rework on the moved out portion of the bridge.
- They working on lowerng the moved out portion of the bridge.
- CC Myers continues dismanteling the existing portion of the bridge which was not moved and has been isolated because of SSD.

Lalit Mathur, P.E. _____ Trans Engineer (D)/Asst. Struct. Rep

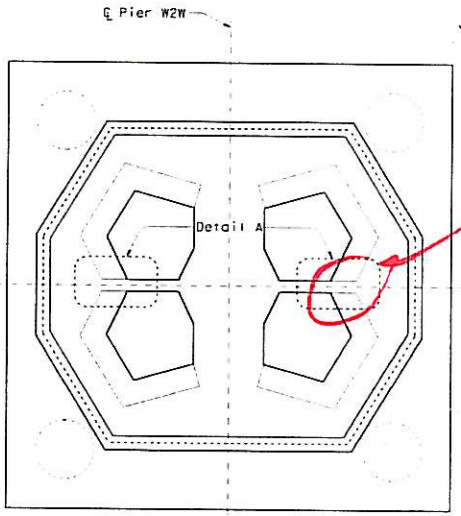

PLAN (Pier W2W shown, Pier W2E similar)
1:100 (Cover slab not shown for clarity)

conc. to be removed and recast.

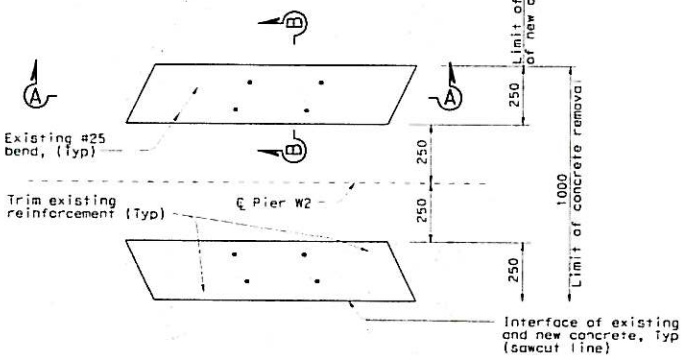

DETAIL A
1:10

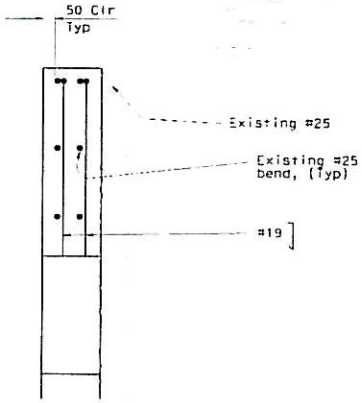

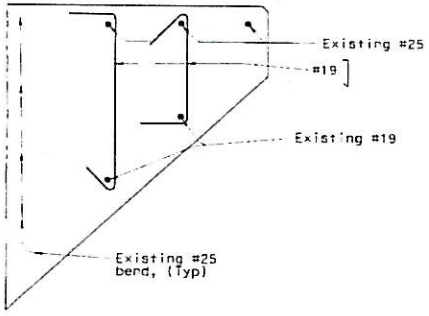

SECTION A-A
1:10

SECTION B-B
1:10

CORBEL REPAIR PROCEDURE

1. Remove existing concrete within limits shown. Existing reinforcement shall be clean and undamaged.
2. Trim and bend existing reinforcement as shown. Install new reinforcement as shown.
3. Cast new concrete (f'c = 35 Mpa @ 56 days) within limits shown. Surfaces of existing concrete that will be in contact with new concrete shall be thoroughly cleaned before placing new concrete.
4. The Contractor shall coordinate this work with his other operations.

100 % PS&E

ALL DIMENSIONS ARE IN MILLIMETERS UNLESS OTHERWISE SHOWN

DIST	COUNTY	ROUTE	KILOMETER POST TOTAL PROJECT	SHEET NO.	TOTAL SHEETS
04	SF	80	13.2/13.9	453	1204

REGISTERED ENGINEER - CIVIL
12-6-04
PLANS APPROVAL DATE
The State of California or its officers or agents shall not be responsible for the accuracy or completeness of electronic copies of this plan sheet.
REGISTERED PROFESSIONAL ENGINEER Marwan M. Nader No. C 054426 Exp. 12/31/05 CIVIL STATE OF CALIFORNIA

T.Y. LIN / MOFFATT & NICHOL
825 BATTERY STREET
SAN FRANCISCO, CA 94111

Caltrans now has a web site! To get to the web site, go to: http://www.dot.ca.gov

R. Valizadeh/V. Tsan/Y.L./M.L./F.C.
DESIGN OVERSIGHT
Ron Valizadeh / Vang Tsan / Y Liu
SIGN OFF DATE 10/20/04

	BY	CHECKED
DESIGN	N. Vo	M. Nader
DETAILS	N. Vo	M. Nader
QUANTITIES	N. Vo	J. Duxbury

PREPARED FOR THE STATE OF CALIFORNIA
DEPARTMENT OF TRANSPORTATION

R. Manzanarez
PROJECT ENGINEER

CU 04
EA 0120F1

BRIDGE NO. 34-0006L/R
KILOMETER POST 13.2/13.9

SAN FRANCISCO OAKLAND BAY BRIDGE
EAST SPAN SEISMIC SAFETY PROJECT
SELF-ANCHORED SUSPENSION BRIDG
(SUPERSTRUCTURE & TOWER)
PIER W2 DETAILS NO.7

Rev. Date 5-18-98

ORIGINAL SCALE IN MILLIMETERS FOR REDUCED PLANS 0 10 20 30 40 50 60 70 80 90 100

DISREGARD PRINTS BEARING EARLIER REVISION DATES

SHEET 36

DIST.	COUNTY	ROUTE	KILOMETER POST TOTAL PROJECT	SHEET NO.	TOTAL SHEETS
04	SF	80	13.2/13.9	448	1204

REGISTERED ENGINEER - CIVIL

12-6-04
PLANS APPROVAL DATE

The State of California or its officers or agents shall not be responsible for the accuracy or completeness of electronic copies of this plan sheet.

T.Y. LIN / MOFFATT & NICHOL
825 BATTERY STREET
SAN FRANCISCO, CA 94111

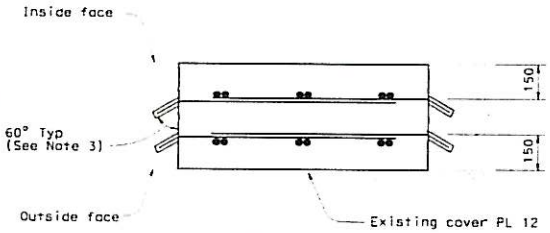

SECTION A-A
1:10

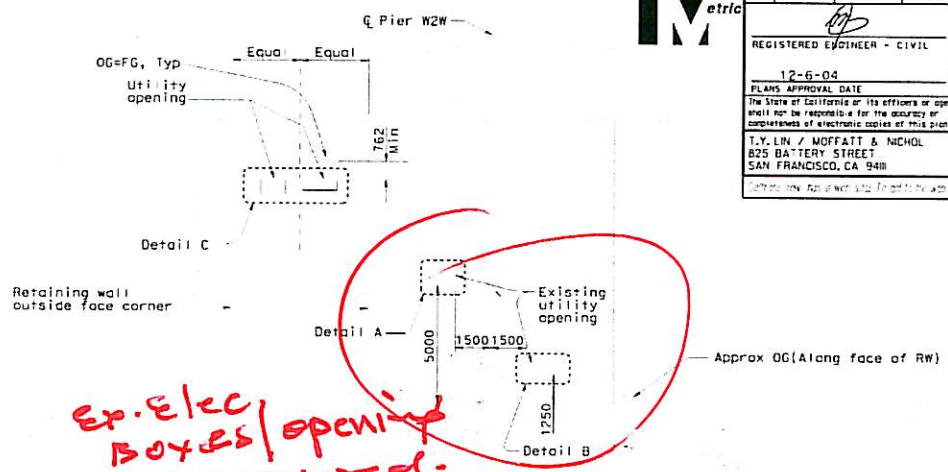

Ex. Elec Boxes/opening to be covered.

VIEW E-E (Developed) (hidden lines not shown for clarity)
1:100

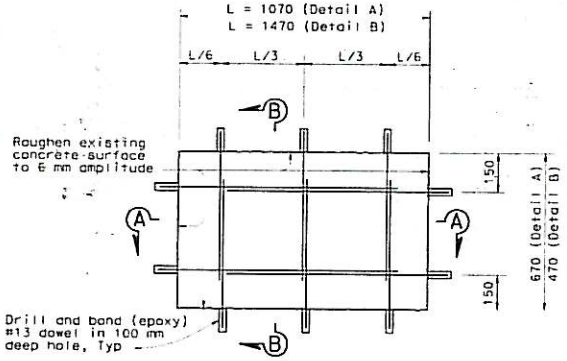

DETAIL A (Detail B similar)
1:10

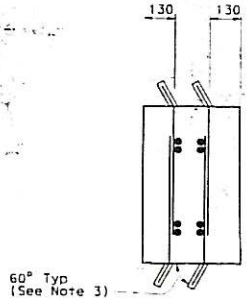

SECTION B-B
1:10

LEGEND:

OF - Outside face = Far face
IF - Inside face = Near face

OPENING REPAIR PROCEDURE:

1. All work shall be done from inside the retaining wall.
2. Roughen inside concrete faces of existing openings.
3. Drill and bond dowels to all surfaces.
4. Cast new concrete (f'c=35 Mpa @ 56 days) to plug up openings. Roughened inside concrete faces shall be thoroughly cleaned before placing new concrete. Existing steel cover plates shall remain in place to be used as concrete formwork.
5. The Contractor shall coordinate this work with his other operations.

NOTES:

1. For Detail C, see "Pier W2 Details No.3" sheet. 3
2. For wall thickness and batter, see "Pier W2 Details No.6" sheet. 3
3. Skewed holes are intended to accomodate access of drilling equipment. The Contractor may drill holes normal (90°) to concrete surface.

3 REVISED PER ADDENDUM NO. 3 DATED NOVEMBER 7, 2005

ALL DIMENSIONS ARE IN MILLIMETERS UNLESS OTHERWISE SHOWN

100 % PS&E

R. Valizadeh/V. Toan/Y.L./W.L./F.C. DESIGN OVERSIGHT Roger Valizadeh / Vanyo Toan / Y. Lin SIGN OFF DATE 10/13/05	DESIGN BY N. Vo	CHECKED M. Nader	PREPARED FOR THE STATE OF CALIFORNIA DEPARTMENT OF TRANSPORTATION	R. Manzanarez PROJECT ENGINEER	BRIDGE NO. 34-0006L/R	SAN FRANCISCO OAKLAND BAY BRIDGE EAST SPAN SEISMIC SAFETY PROJECT
	DETAILS BY N. Vo	CHECKED G. Baker			KILOMETER POST 13.2/13.9	SELF-ANCHORED SUSPENSION BRIDGE (SUPERSTRUCTURE & TOWER)
	QUANTITIES BY N. Vo	CHECKED G. Baker				PIER W2 DETAILS NO.2

Rev. Date 5-18-98

ORIGINAL SCALE IN MILLIMETERS FOR REDUCED PLANS 0 10 20 30 40 50 60 70 80 90 100

CU 04
EA 0120F1

DISREGARD PRINTS BEARING EARLIER REVISION DATES

SHEET 31

DATE: 9-30-09

FOREMAN: TERRY CRONK JOB NO.: 660110

First Work Period Times		Operations Cease	Second Work Period Times	
Start: 7:00	Finish: 12:00		Start: 12:40	Finish: 3:30

American Bridge / FLUOR
A JOINT VENTURE

WEATHER: Clear

M T (W) TH F SA S

NAME		CLASSIFICATION	WORK DESCRIPTION	Super vision SDI	P.T. form work	Punch list	Super vision	Site clean up	electrical box Move	Scaffold build	
			COST CODE →								
			TOTAL HOURS ↓								
CRONK, TERRY	1	PDRF	ST 8	1			1			6	
			OT								
LOHSE, NIGEL	2	PDRF	ST 8		2	2	2	2			
			OT								
			ST								
			OT								
CHAISSON, K.	3	PDR	ST 8		8						
			OT								
JOHANSEN, J.	4	PDR	ST 8		8						
			OT								
			ST								
			OT								
			ST								
			OT								
			ST								
			OT								
			ST								
			OT								
WHITNEY, JAMAL	5	PDRA4	ST 8					3	5		
			OT								
YAMBAO, R.S.	6	PDRA7	ST 8					3	5		
			OT								

Pier W2 work pkg Defect 7 453/1204 Due 0

Planning work Pier Duty 448/1204 Defect Pier W2 = 2.

SUPERVISOR'S DAILY REPORT

- SDI onsite
- P.T. Formework
- Punchlist items / SWEEPE issues
- Supervision
- Site Clean-Up
- Electrical Box Move

BREAKS AND MEALS

Were employees afforded an opportunity for the morning rest period?	(Y) N	If No explain:
Were employees afforded an opportunity for the scheduled meal period?	(Y) N	If No explain:
Were employees afforded an opportunity for the afternoon rest period?	(Y) N	If No explain:

ACCIDENTS & INCIDENTS

EQUIPMENT REPORT

EQUIPMENT NO.	DESCRIPTION	HOURS	ISSUES/REPAIRS
	Liebherr Crawler		

FOREMAN'S DAILY TIME SHEET

DATE: 9-30-09

FOREMAN: Terry Cronk JOB NO.: 660110

First Work Period Times		Operations Cease	Second Work Period Times	
Start: 7:00	Finish: 12:00		Start: 12:40	Finish: 3:30

American Bridge / FLUOR
A JOINT VENTURE

WEATHER: Clear

M T (W) TH F SA S

NAME	CLASSIFICATION		WORK DESCRIPTION	W2 CRANE & EQ OPERS	TEMP ELEV OPERATOR	Pressure WASH P.T. Blast	Site Clean				
			COST CODE →	0311210	0118000						
			TOTAL HOURS ↓								
CAMPOS, R.C. 7	LBR	ST	8			6	2				
		OT									
		ST									
		OT									
		ST									
		OT									
SCOTT, JEFF	OESEF1	ST									
		OT									
SHOWMAN, JOE 8	OESEF1	ST	8	8							
		OT									
ROSS, SCOTT 9	OEA3	ST	8	8							
		OT									
SCHROYER, H.B. 10	OEMMH	ST	8		8						
		OT	.5		.5						
		ST									
		OT									
		ST									
		OT									
		ST									
		OT									
SCHWARTZ, DANNY School	LBRA3	ST									
		OT									

SUPERVISOR'S DAILY REPORT

BREAKS AND MEALS

Were employees afforded an opportunity for the morning rest period?	(Y / N)	If No explain:
Were employees afforded an opportunity for the scheduled meal period?	(Y / N)	If No explain:
Were employees afforded an opportunity for the afternoon rest period?	(Y / N)	If No explain:

ACCIDENTS & INCIDENTS

EQUIPMENT REPORT

EQUIPMENT NO.	DESCRIPTION	HOURS	ISSUES/REPAIRS