STATE OF CALIFORNIA
DEPARTMENT OF TRANSPORTATION

Form HC-10A (Rev. 6/80)

Job Stamp
04-0120F4
SFOBB SAS

Const. Calendar Day No. 964
Project Work Day No 1174
Date 08/04/2009

Shift Hours Start 7:00 Stop 3:30 PM
Inspector Shift 7:00 AM to 3:30 PM

ASSISTANT RESIDENT ENGINEER'S

CONTRACTOR – ABFJV

EQUIPMENT AND/OR LABOR:

Equip. #	NO. MEN	DESCRIPTION (Of Equipment or Labor)	HOURS - ITEM NO. #38 Str. Concrete, Bridge	# 48 Bar Reinforcement Steel	#34 Pre-stress CIP Conc. at W2							IDLE OR DOWN	REMARKS Name	Contractor
1	1	Gen. Foreman	8										Terry Cronk	ABF
2	1	Laborer	8										Rigiberto Campos	ABF
3	1	Pile Driver/Welder	8										Henry Wheat	ABF
4	1	Elevator Operator	8										Howard Schroyer	ABF
5	1	Pile Driver Foreman	8										Nigel Lohse	ABF
6	1	Pile Driver	8										Kurt Chaisson	ABF
7	1	Pile Driver	8										Jesse Johnasen	ABF
8	1	Operator Apprentice/oiler										8	Ross Scott	ABF
9	1	2nd Crane Operator	8										Ben Scott	ABF
10	1	Pile Driver	8										Richie Yambo	ABF
11	1	Pile Driver	8										Jeff Scott	ABF school
12	1	Pile Driver/Welder	8										Harry Wheat	ABF
13	1	Pile Driver	8										Jamal Whitney	ABF
14	1	Pile Driver	8										Danny Schwartz	ABF
15	1	Oiler	8										Anthony Leon	ABF new hired 8/2/09
	1	Crane LR 1300	8											ABF
	1	2nd crane RT-160	8											ABF
	1	1st Man Lift S-125	8									8		ABF
	1	2nd Man Lift S-125										8		ABF
	1	3rd Man Lift S-125												ABF Rental
	1	Lincoln Vantage Welding M/C 768-50-4005	8											ABF
	1	Lincoln Vantage Welding M/C 768-50-4009	8											ABF at ground
	1	MQ Power Generator 220	8											ABF Main power
	1	MQ Power Generator 400										8		ABF Main power top
	1	Ingersoll Rand Air compressor 20-2183	8											ABF central
	1	Forklift Hertz Rental 544D-10	8											ABF

REC'D H31 SEP-17 H010976

	1	Pickup	8											ABF
	1	Elevator	8											ABF

Weather: Sunny morning, 52 F low 65 F high. Med. Medium winds.

Description of Operation:

ABF is working on clean up at ground.
ABF is using 3 dumpster to collect the trash from formwork removal.

As of now, ABF has removed all 21 out of 21 columns supporting the deck.
ABF needs to remove only 3 columns and one lateral support beam fom the north foundation well.

The Bigge system and the supporting stay on the top and the ABF installed two pairs of beams under the deck.
The bigge system and the beams will be removed later on.

ABF lowered the platform on Friday successfully.
ABF is checking support brackets for load transfer from Bigge System to the brackets supported by embedded rods.
ABF's crew were checking the lowered platform for any damage.
ABF crew brought down the hanging 2 x 4 at the north and south block out form work supports. They are adding supports to full depth to lowered platform.
A check of the bottom of the W2 did not show any appreciable problems. There were few nails embedded in concrete from the bottom deck plywwod and were being pulled/bent by ABF.
ABF is cleanng all debris from top of the lowered platform.
ABF and rebar guys were planning on how to install the epoxy rebars in the closure pour. No installation work was performed.
ABF is removing the plastic blockouts, round shaped, at the bottom of the Vertical PT 12-15 dia strands at the E-Line as shown Sections B-B and C-C on drawing 508R2 of 1204. There are 16 such strand for E-Line and 16 for W-Line.

ABF's Jim Davidson & Charles forwarded the Mix Design information to be used for Thursday's pour for the cover slab for Vertical Tie Downs.
The site was extremely busy as the crew from South Side Detour were pouring foundations as well.

Additional Work at or outside of the W2 Site:

- CC Myers continues to work on foundations near W3. The foundation work seems to be coming to completion.
- CC Myers has erected last but one (group of 4) of the columns for the South Side Detour. They continue to erect additional towers/columns.
    - CC Myers had built the most of foundations and are ready for supporting columns.
    - Today CC Myers started to excavate additional foundations on the north and east of W3. These are additioanl foundations to support the columns for south side detour project.

- ABF continues to erect the Frames for Temporary Tower Columns G.
    - ABF is installing the collars at the W2 piers to tie the Temporary Tower. ABF has finished connecting the E-Line truss to the Collar.
    - ABF continues to connect the collar for W-Line to the W2 pier and the Trusses.

Lalit Mathur, P.E. Trans Engineer (D)/Asst. Struct. Rep

DIST.	COUNTY	ROUTE	KILOMETER POST TOTAL PROJECT	SHEET NO.	TOTAL SHEETS
04	SF	80	13.2/13.9	506R2	1204

REGISTERED ENGINEER - CIVIL

12-6-04

PLANS APPROVAL DATE

The State of California or its officers or agents shall not be responsible for the accuracy or completeness of electronic copies of this plan sheet.

T.Y. LIN / MOFFATT & NICHOL
825 BATTERY STREET
SAN FRANCISCO, CA 94111

Caltrans now has a web site! To get to the web site, go to: http://www.dot.ca.gov

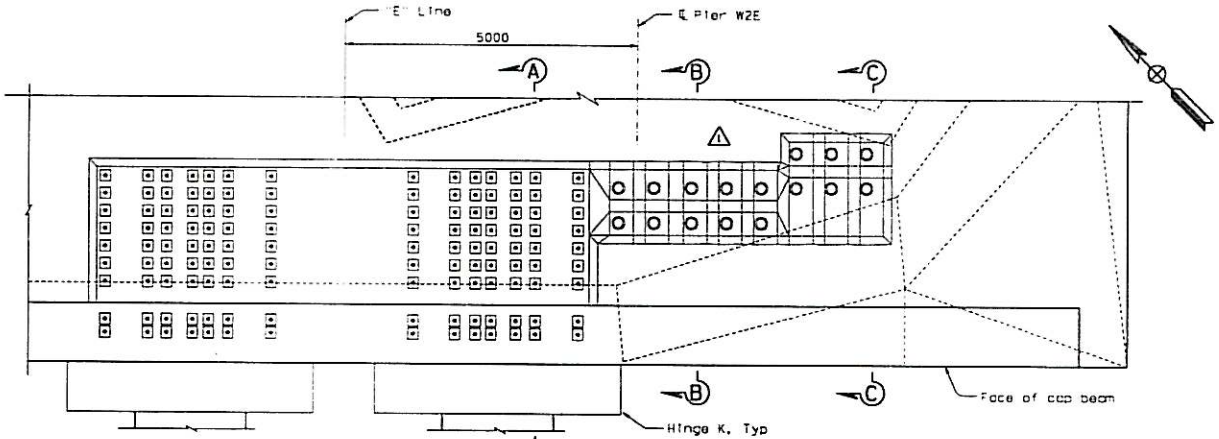

PLAN
1:40

(36 Dia post-tension rod and 12-15 Dia strand tendon blockouts)

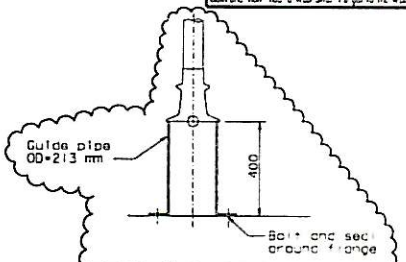

2 DEAD END GUIDE PIPE
NTS (see Note 6)

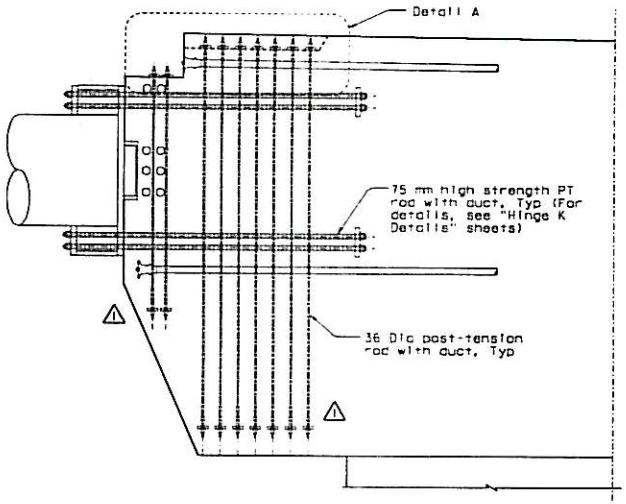

SECTION A-A
1:40

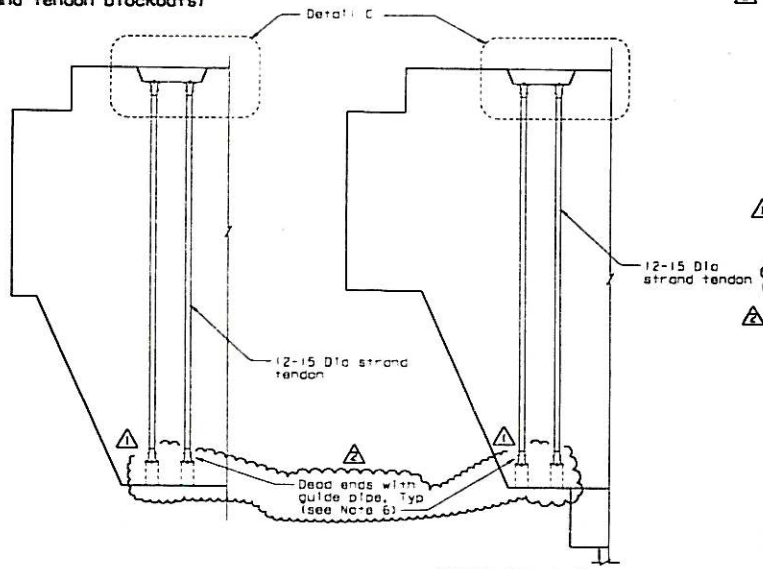

SECTION B-B
1:40

SECTION C-C
1:40

ALL DIMENSIONS ARE IN MILLIMETERS UNLESS OTHERWISE SHOWN

NOTES:

1. Cap beam reinforcement not shown for clarity.
2. Local confining spiral reinforcement for tendon anchors shall be provided by PT tendon hardware supplier.
3. Blockouts on the cap beam "E" Line shown, blockouts on the cap beam "W" Line similar.
4. (1) For Details A and C, see "W2 Cap Beam Blockout Details No. 12" sheet.
5. For additional prestressing details, see "Prestressing Notes" sheet.
6. (2) Contractor shall coordinate the dead end guide pipe details with the PT Supplier and shall submit them to the Engineer for review and approval. Contractor shall grout the guide pipe after stressing operations have been completed.

FOR REVISIONS ONLY

MARK	DATE	DESCRIPTIONS	BY	CH'D	CCO#
2	01/31/07	CORROSION PROTECTION	JD	AS	16
1	07/21/06	W2 CAP BEAM ISD	JD	NV	23

REVISIONS

CONTRACT CHANGE ORDER NO. ____
SHEET ___ OF ___

SAN FRANCISCO OAKLAND BAY BRIDGE
EAST SPAN SEISMIC SAFETY PROJECT
SELF-ANCHORED SUSPENSION BRIDGE
(SUPERSTRUCTURE & TOWER)

W2 CAP BEAM BLOCKOUT DETAILS NO. 11

R. Vallzadeh/V. Tsan/Y.L./N.L./F.C.
DESIGN OVERSIGHT
STCN OPT DATE 01/31/07

DESIGN	BY J. Sun	CHECKED M. Chen	
DETAILS	BY J. Duxbury	CHECKED M. Chen	
QUANTITIES	BY S. Shi	CHECKED D. Harrison	

PREPARED FOR THE STATE OF CALIFORNIA DEPARTMENT OF TRANSPORTATION

R. Manzanarez
PROJECT ENGINEER

BRIDGE NO. 34-0006L/R
KILOMETER POST 13.2/13.9
CU 04
EA 0120F1

SHEET 91R2

FILE => I:\80\04-012001\aca\contract plans and ccos\cco#16\cbcbd11.dgn

DATE PLOTTED => 15 MAR 2007 TIME PLOTTED => 15:35:58
USERNAME => vlantor
100 % PSAE

OREMAN'S DAILY TIME SHEET

ATE: 8-4-09

OREMAN: Nigel Lohse JOB NO.: 660110

First Work Period Times		Operations Cease	Second Work Period Times	
Start: 7:00	Finish: 12:00		Start: 12:40	Finish: 3:30

American Bridge / FLUOR. A JOINT VENTURE

EATHER: Overcast

M (T) W TH F SA S

NAME	CLASSIFICATION		WORK DESCRIPTION	W2 CRANE & EQ OPERS	TEMP ELEV OPERATOR	CONCRETE PREP	Handrail Stairs Scaffold				
			COST CODE →	0311210	0118000	0315220					
			TOTAL HOURS ↓								
AMPOS, R.C.	LBR	ST	8				8				
		OT									
		ST									
		OT									
Scott, Jeff		ST	8	8							
		OT									
COTT, BEN	OEJ2	ST	8	8							
		OT									
HOMAS, DALE	OEPD1	ST									
		OT									
OSS, SCOTT School week	OEA2	ST									
		OT									
CHROYER, H.B.	OEMMH	ST	8		8						
		OT	.5		.5						
Brown, Anthony		ST	8	8							
		OT									
		ST									
		OT									
~~ONTRERAS, BYRON~~	LBR	ST									
		OT									
CHWARTZ, DANNY	LBRA3	ST	8			8					
		OT									

SUPERVISOR'S DAILY REPORT

Concrete Prep — Find missing Formsavers

BREAKS AND MEALS

Were employees afforded an opportunity for the morning rest period?	(Y) N	If No explain:	
Were employees afforded an opportunity for the scheduled meal period?	(Y) N	If No explain:	
Were employees afforded an opportunity for the afternoon rest period?	(Y) N	If No explain:	

ACCIDENTS & INCIDENTS

EQUIPMENT REPORT

EQUIPMENT NO.	DESCRIPTION	HOURS	ISSUES/REPAIRS

Rev 0 (07-07-08)

)REMAN'S DAILY TIME SHEET

ATE: 8-4-09

)REMAN: NIGEL LOHSE JOB NO.: 660110

First Work Period Times		Operations Cease	Second Work Period Times	
Start: 7:00	Finish: 12:00		Start: 12:40	Finish: 3:30

American Bridge / FLUOR
A JOINT VENTURE

EATHER: Overcast

M (T) W TH F SA S

NAME	CLASSIFICATION		WORK DESCRIPTION	W2	False work Prep	Handrail Stairs Scaffold					
			COST CODE →								
			TOTAL HOURS ↓								
ONK, TERRY	PDRF	ST	8	8							
		OT									
HSE, NIGEL	PDRF	ST	8	8							
		OT									
~~AMS~~, A.	PDR	ST									
		OT									
AISSON, K.	PDR	ST	8			8					
		OT									
HANSEN, J.	PDR	ST	8			8					
		OT									
EAT, HARRY	PDR	ST	8		8						
		OT									
EAT, HENRY	PDR	ST	8		8						
		OT									
		ST									
		OT									
LLEY, ~~ABAS~~	PDRA4	ST									
		OT									
ITNEY, JAMAL	PDRA4	ST	8			8					
		OT									
MBAO, R.S.	PDRA7	ST	8			8					
		OT									

SUPERVISOR'S DAILY REPORT

- RPS onsite
- Continue to Prep Falsework / Fix all Handrail, Stairs & Scaffolding

BREAKS AND MEALS

Were employees afforded an opportunity for the morning rest period?	(Y) N	If No explain:	
Were employees afforded an opportunity for the scheduled meal period?	(Y) N	If No explain:	
Were employees afforded an opportunity for the afternoon rest period?	(Y) N	If No explain:	

ACCIDENTS & INCIDENTS

EQUIPMENT REPORT

EQUIPMENT NO.	DESCRIPTION	HOURS	ISSUES/REPAIRS
	Liebherr		
	90T Hydro		
	Gradall		

Rev 0 (07-07-08)

358

CEMEX

4750-A Norris Canyon Road
San Ramon, CA 94583
(925) 866-2983 - Fax

Technical Services

Cemex Submittal Cover Sheet

Company: AMERICAN BRIDGE **Attn:** JIM DAVIDSON

Fax/Email: jdavidson@abfjv.com **Submittal #:** 18144

Project: SAS SUPERSTRUCTURE **Date:** 6/16/09

East Bay Division

	Sales Person	Office Number	Cell Number	Fax Number	E-mail (@cemex.com)
	John Rios - Oak.	(510) 533-5093	(408) 506-3655	(661) 885-4140	john.rios
	Rick Martinez - S.R.	(925) 426-2107	(925) 200-3215	(661) 215-6310	richard.martinez

Metro/South/West Bay Division

✓	Kevin Hoy - S.Carlos.	(415) 643-2946	(650) 333-5357	(661) 215-6372	patrickk.hoy
	John Christ - S.Carlos		(408) 421-8179	(661) 215-6326	john.christ
	Jeff King - S.F.	(415) 643-2945	(925)998-5022	(661) 215-6416	jeff.king
	Rick Cook - S.C.	(408) 969-4933	(408) 205-8992	(661) 215-6309	rick.cook
	Walt Niestemski		(650) 773-4224	(661) 885-4169	walter.niestemski

Sacramento Division

	Heather Bowdish		(707) 580-3138	(661) 215-6597	hbowdish@cemexusa
	Larry Campbell S.A.	(530) 626-3590	(530) 363-2855	(661) 885-4132	larrya.campbell
	Russ Evanski		(916) 337-0507	(661) 885-4157	russell.evanskir
	Tony Skulick		(916) 934-8276	(661) 215-6098	tony.skulick
	Curt Higgins		(707) 580-4405		chiggins@cemexusa
	Darla Allen		(916) 240-1696	(661) 885-4151	darlaa.allen

Mix #		Mix #	
Mix #		Mix #	
Mix #	1441508	Mix #	
Mix #		Mix #	
Mix #		Mix #	
Mix #		Mix #	
Mix #		Mix #	
Mix #		Mix #	

TECHNICAL SERVICES LABORATORY
4750 Norris Canyon Road, Suite A
San Ramon, CA 94583

Telephone: (925) 866-2780 Fax: (925) 866-2983

June 30, 2009

American Bridge/Fluor
Fax: 510-808-4601
Attn: Jim Davidson

Project Reference: SAS Superstructure
Subject: New Mix Number

During CEMEX's recent conversion to SAP/Command Batch operating system the mix formula 1412995 was provided as alternate for mix #161145. The alternate formula was corrupted; please disregard this previously provided mix number

Attached is an alternate mix number for the Class 1: Mid Range mix (161145). When ordering concrete for upcoming concrete placement, please use mix #1441508. This formula is proportioned to be an equivalent match for mix #161145.

This is only an administrative correction; the proportioning and performance characteristics of the concrete mix formula are not changed.

Respectfully,

Bob Foley
QC Manager, Bay Area Region
CEMEX

cc: Kevin Hoy

6/30/2009

East Bay Division			
	Salesperson	Phone #	Fax #
	Marci Castellani	(925) 784-8101	(661) 215-6439
	John Rios	(408) 506-3655	(661) 885-4140
	Rick Martinez	(925) 200-3215	(661) 215-6310
	Dispatch	East/West Bay Metro	(925) 866-1177 (925) 249-2640

Customer: **American Bridge**

Submittal #: 18253

Attn.: Jim Davidson

RE: SAS Superstructure

Dear Jim Davidson:

Concrete mixes have been proportioned in accordance with the requirements of the American Concrete Institute (ACI) sections 318, 301 or 211, California Department of Transportation (CalTrans), U.B.C. and/or C.B.C.

Mix Number	Description	Usage
1441508	M3 475KG F25% 12.5MM P HS M W	Class 1: Mid Range

When placing orders for this project, please order by mix number.

Concrete supplied to this project will meet or exceed the design strength specified on the delivery ticket when evaluated in accordance with ACI-318, ACI-301, and ASTM C-94. The measured slump must not exceed the maximum slump, and the concrete must be tested in strict accordance with the provisions of ASTM standards C-172, C-143, C-31, C-39 and C-617.

In accordance with ASTM C-94, please copy our office with all test results obtained on this concrete by independent testing laboratories. Mix designs will be adjusted as required by UBC section 1905 to maintain the noted strength level.

Respectfully,
CEMEX

Supplier: CEMEX

Customer: American Bridge
Attention: Jim Davidson

Date Issued: 6/30/2009

Project: SAS Superstructure
Submittal #: 18253

Plant: 4433
Pier 92

Mix #: 1441508 **Description: M3 475KG F25% 12.5MM P HS M W**
Use: Class 1: Mid Range

Material	Source	Description	ASTM	Specific Gravity	ml/m3	Weight (kg)	Volume
Type II-V	Type II/V	Cemex	C-150	3.15		356.0	0.11
Fly Ash F	Flyash	Headwaters Resources	C-618	2.38		119.0	0.05
Fine Aggregate	Orca Concrete San	Polaris Minerals Corp.	C-33	2.78		846.5	0.30
Type D Water Reducer &	Recover	Grace	C-494	1.00	640		0.00
Mid Range Water Reducer	Adva 140	Grace	C-494	1.00	2475		0.00
Type A Water Reducer	Wrda 64	Grace		1.00	1250		0.00
City	Water		C-94	1.00		158.0	0.16
Aggregate	Orca 12.5mm	Polaris Minerals Corp.	C-33	2.89		1010.0	0.35
Air							0.03
					TOTAL	**2490**	**1.00**

Specified F'c :	MPa	Designed Unit Weight:	2,489.5 kg./cu.m.
Specified Penetration:	mm	Designed W/C + P Ratio:	0.33
Specified Air:	2.50 %	Designed Volume:	1.00 cu.m.

NOTES:

CEMEX has no knowledge or authority regarding where this mix is to be placed , therefore it is the responsibility of the project architect/engineer, and or contractor to insure that the above designed mix parameters of compressive strength, water cement ratio, cement content, and air content, are appropriate for the anticipated environmental conditions (ie. ACI-318 sections 4.1-4.3, and the local Building Codes).

This submittal has been prepared for the above client and project ONLY. It is not to be used or reproduced by the client or any third party for any other project without the written permission of CEMEX.

COMMENTS:
* Mix #1441508 is equivalent to Mix #161145
* Please have your pumping company verify pumpability
* Please send compressive strength results to Cemex for statistical analysis.
* Slump limit of: 125- 175 mm

1992 - 2009 Digital Site Systems, Inc.

Quadrel iService SM

COMBINED AGGREGATE WORKSHEET

Attn:

Name:
Project:
Location:

Group
Mix # 1441508
Report

Workability & Coarseness Factors		Workability Factor	Coarseness Factor	Within Limits
	Actual	51.9	26.8	No
	Desired	36.0	60.0	Yes

Aggregate Information		Orca 12.5mm	Orca Concrete Sand	Combined Aggregate Grading	Mix Required Grading Limits Caltrans 12.5mm
Weight	(Kgs)	1010	847	1857	
Percent	by weight	54.40	45.60	100.00	
Volume	(m^3)	0.349	0.305	0.654	
Percent	by vol	53.44	46.56	100.00	
Spec Gr		2.89	2.78	2.84	
Cost	($/m. ton)				
Weight	Fraction				

GRADING Sieve Name	% Passing	% Passing	% Passing	% Lower	% Upper	Passes
2 in. (50 mm)			100.0	100.0	100.0	OK
1 1/2 in. (37.5 mm)			100.0	100.0	100.0	OK
1 in. (25 mm)			100.0	100.0	100.0	OK
3/4 in. (19 mm)	100.0		100.0	100.0	100.0	OK
1/2 in. (12.5 mm)	94.0		97.0	90.0	100.0	OK
3/8 in. (9.5 mm)	70.0	100.0	84.0	55.0	86.0	OK
No. 4 (4.75 mm)	12.0	99.0	52.0	45.0	63.0	OK
No. 8 (2.36 mm)	3.0	82.0	39.0	35.0	49.0	OK
No. 16 (1.18 mm)		68.0	33.0	25.0	37.0	OK
No. 30		46.0	23.0	15.0	25.0	OK
No. 50		22.0	12.0	5.0	15.0	OK
No. 100		5.0	4.0	1.0	8.0	OK
No. 200		1.0	1.9	0.0	4.0	OK
Pan	0.0	0.0	0.0			
Fineness Modulus	6.15	2.78	4.55	5.19	4.17	

COMBINED AGGREGATE WORKSHEET

Attn:

Name:
Project:
Location:

Group
Mix # 1441508
Report

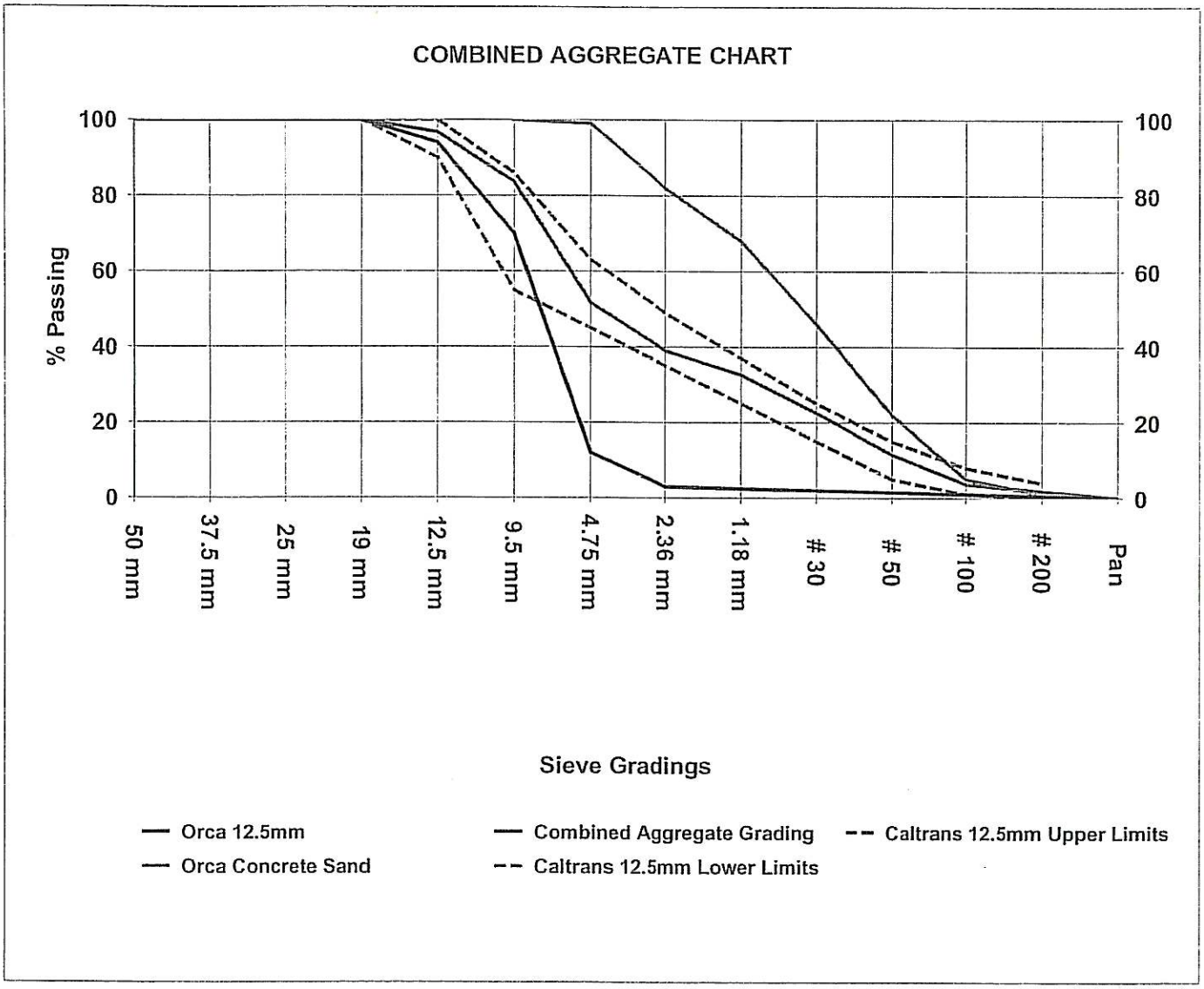

430 N. Vineyard Ave., Suite 500
Ontario, CA 91764
Telephone: (760) 381-7674
Fax: (760) 381-7644

CEMENT MILL TEST REPORT

Cement Identified as: **Date:** 7/12/2008

Type: II/V Low Alkali
Plant Location: Davenport, CA
Production Dates: **Beginning:** 6/1/08
Ending: 6/30/08 **Reference No.** 39625

STANDARD CHEMICAL REQUIREMENTS (ASTM C 114)	ASTM C 150 SPECIFICATIONS	TYPE I	TYPE II	TYPE V	TEST RESULTS
Silicon Dioxide (SiO2), %	Minimum	---	20.0	---	20.7
Aluminum Oxide (Al2O3), %	Maximum	---	6.0	---	4.0
Ferric Oxide (Fe2O3), %	Maximum	---	6.0	---	3.8
Calcium Oxide (CaO), %	---	---	---	---	63.5
Magnesium Oxide (MgO), %	Maximum	6.0	6.0	6.0	2.0
Sulfur Trioxide (SO3), %	Maximum	3.0	3.0	2.3 *	2.6
Loss on Ignition (LOI), %	Maximum	3.0	3.0	3.0	1.3
Insoluble Residue, %	Maximum	0.75	0.75	0.75	0.22
Alkalies (Na2O equivalent), % ***	Maximum	0.60	0.60	0.60	0.57
Tricalcium Silicate (C3S), %	---	---	---	---	61
Dicalcium Silicate (C2S), %	---	---	---	---	13
Tricalcium Aluminate (C3A), %	Maximum	---	8	5	4
Tetracalcium Aluminoferrite (C4AF), %	---	---	---	---	12
(C4AF + 2C3A) or (C4AF + C2F), %	Maximum	---	---	25	20
(C3S + 4.75 * C3A)%	Maximum	---	100	100	82
PHYSICAL REQUIREMENTS					
(ASTM C 204) Blaine Fineness, cm^2/gm	Minimum	2800	2800	2800	3930
(ASTM C 430) -325 Mesh, %	---	---	---	---	94.2
(ASTM C 191) Time of Setting (Vicat)					
Initial Set, minutes	Minimum	45	45	45	90
Final Set, minutes	Maximum	375	375	375	190
(ASTM C 451) False Set, % ***	Minimum	50	50	50	68
(ASTM C 185) Air Content, %	Maximum	12	12	12	8.0
(ASTM C 151) Autoclave Expansion, % **	Maximum	0.80	0.80	0.80	0.05
(ASTM C 187) Normal Consistency, %	---	---	---	---	24.4
(ASTM C 1038) Mortar Bar Expansion in Water, %	Maximum	0.020	0.020	0.020	0.006
(ASTM C 109) Compressive Strength, psi (MPa)					
1 Day	---	---	---	---	2180
3 Day	Minimum	1740 (12.0)	1450 (10.0)	1160 (8.0)	3520
7 Day	Minimum	2760 (19.0)	2470 (17.0)	2180 (15.0)	4130
28 Day (Strength from Preceeding Month)	Minimum	---	---	3050 (21.0)	5340
(CA Test 527) Mortar Bar Expansion in Water, %	Maximum	---	0.010	---	0.008
(CA Test 527) Mortar Bar Contraction in Air, %	Maximum	---	0.048	---	0.021

* *The performance of CEMEX Type II/V Low Alkali has proven to be improved with sulfur trioxide levels in excess of the 2.3% limit for Type V. Note D in ASTM C 150 allows for additional sulfate, provided expansion as measured by ASTM C-1038 does not exceed 0.020%.*
** Caltrans requires the autoclave expansion to be 0.50 maximum for Type II Modified portland cement.
*** The noted specification is an optional ASTM requirement.

CEMEX hereby certifies that this cement meets or exceeds the chemical and physical Specifications of:
ASTM C 150-05 for Type I, Type II and Type V Low Alkali portland cements,
CalTrans, Section 90-2.01 Type II Modified and Type V / Test 527, and
ASTM C 150-02a for Type I, Type II and Type V Low Alkali portland cements

By: Anna M. Castello
Quality Control Manager
CEMEX - Davenport Cement Plant
700 Highway 1, Davenport, CA 95017

CTL | THOMPSON

Chemical and Physical Analysis of Fly Ash

Developed For: *Headwaters Resources*
16817 - 155th Pl SE
Renton, WA 98058

Ticket: *8490*	Plant of Origin: *Bridger*	Sample Date Range: *11/10/2008*
Job: *14420*	Sample ID: *Br-108-08T*	to: *11/14/2008*
Report Date: *01/19/2009*	Docket: *10031968 - 10032084*	Date Received: *11/20/2008*

Chemical Composition (%)

(by Wyoming Analytical Laboratories, Inc.)

			ASTM C 618-08 Specifications	
			Class F	Class C
Total Silica, Aluminum, Iron:	*79.9*		70.0 Min	50.0 Min
Silicon Dioxide:		*56.1*		
Aluminum Oxide:		*19.4*		
Iron Oxide:		*4.4*		
Sulfur Trioxide:	*0.9*		5.0 Max	5.0 Max
Calcium Oxide:	*9.0*			
Moisture Content:	*0.1*		3.0 Max	3.0 Max
Loss on Ignition:	*0.4*		6.0 Max	6.0 Max
			California DOT Specifications	
Total Alkalies (as Na_2O):	*4.3*		5.0 Max	5.0 Max
Total Sodium Oxide:		*3.70*		
Total Potassium Oxide:		*0.85*		

Physical Test Results

		ASTM C 618-08 Specifications	
		Class F	Class C
Fineness, Retained on #325 Sieve (%):	*22.7*	34 Max	34 Max
Strength Activity Index (%)			
Ratio to Control @ 7 Days:	*85.2*		
Ratio to Control @ 28 Days:	*88.0*	75 Min	75 Min
Water Requirement, % of Control:	*93.4*	105 Max	105 Max
Soundness, Autoclave Expansion (%):	*0.02*	0.8 Max	0.8 Max
Drying Shrinkage, Increase @ 28 Days (%):	*0.00*	0.03 Max	0.03 Max
Density Mg/m^3:	*2.36*		

Comments:

COLORADO REGISTERED PROFESSIONAL ENGINEER ORVILLE R. WERNER II 14540 1/19/2009

CTL | Thompson Materials Engineers, Inc.

Orville R. Werner II

Orville R. Werner II, P.E.

Orca SAND & GRAVEL LTD.

Revised: June 01, 2008

ORCA WASHED GRAVEL 1/2" x No.4 (12.5 x 4.75mm)

The Orca concrete aggregates are produced at the Orca Quarry, Port McNeill, B.C., in a modern and efficient washing and processing plant opened in March 2007 and distributed via ocean-going ships or barges. The California Department of Transportation has established that aggregates from this source are innocuous with respect to Alkali Silica Reactivity and has approved them for use in reduced mineral admixture (flyash) concrete. The CalTrans reference number to be quoted for this gravel is 07-CAN-OQ-2.

GRADATION – PERCENTAGE PASSING

SIEVE	ORCA GRAVEL (Typical Values)		SPECIFICATIONS		
			CALTRANS Per: 90-3.01 (2006)		ASTM C33-03 Type 7
19.0 mm (3/4")	100		100		100
12.5 mm (1/2")	98		82 - 100		90 - 100
9.5 mm (3/8")	65	X = 70	55 - 85	X ± 15	40 - 70
4.75 mm (#4)	2		0 - 15		0 - 15
2.36 mm (#8)	<1		0 - 6		0 - 5

PROPERTIES

	TEST	ORCA	SPECIFICATIONS	
			CALTRANS	ASTM
Specific Gravity, bulk SSD	CT 206	2.88		
Absorption	CT 206	0.5		
Dry Rodded Unit Weight, pcf	CT 212	115		
Cleanness Value	CT 227	>80	75 Min.	
Durability	CT 229	90		
Sodium Sulfate Soundness	C-214	<1%	10% Max.	12% Max.
Magnesium Sulfate Soundness	C-88	<1%		18% Max.
Los Angeles Abrasion (500 Revs)	C-535	5%	45% Max.	50% Max.
Materials Finer Than No. 200	C-117	<0.5%		1.0% Max.
Alkali Silica Reactivity	C-1260	0.01% Innocuous		0.10%

Herb G. A. Wilson, Chief Operating Officer.

Orca Sand & Gravel Ltd. • 6505 Island Highway • Port McNeill • BC • V0N 2R0
Telephone: (604) 628-3353 Facsimile: (604) 628-3354

Orca SAND & GRAVEL LTD.

Revised: June 01, 2008.

ORCA WASHED CONCRETE SAND

The Orca concrete aggregates are produced at the Orca Quarry, Port McNeill, B.C., in a modern and efficient washing and processing plant opened in March 2007 and distributed via ocean-going ships or barges. The California Department of Transportation has established that aggregates from this source are innocuous with respect to Alkali Silica Reactivity and has approved them for use in reduced mineral admixture (flyash) concrete. The CalTrans reference number to be quoted for this sand is 07-CAN-OQ-1.
Independent laboratory concrete trial mixes using Orca 1" x #4 gravel and Orca washed concrete sand produced results designated "Low Shrinkage" in accordance with test method ASTM C157 (Modified).

GRADATION – PERCENTAGE PASSING

SIEVE SIZE		ORCA SAND (Typical Values)		SPECIFICATIONS		
				CALTRANS Per: 90-3.01 (2006)		ASTM C 33-03
9.50 mm (3/8")		100.0		100		100
4.75 mm (#4)		99		95 – 100		95 – 100
2.36 mm (#8)		81		65 – 95		80 – 100
1.18 mm (#16)	"A"	68	X = 68	58 – 78	X ± 10	50 – 85
600 µm (#30)	"B"	49	X = 46	37 – 55	X ± 9	25 – 60
300 µm (#50)	"C"	25	X = 26	20 – 32	X ± 6	5 – 30
150 µm (#100)		6		2 – 12		0 – 10
75 µm (#200)		<2		0 – 8		0 – 3
	A – B	19		10 – 40		
	B – C	24		10 – 40		
Fineness Modulus		2.65 – 2.85				2.3 – 3.1

PROPERTIES

	TEST	ORCA	SPECIFICATIONS	
			CALTRANS	ASTM
Specific Gravity, bulk SSD	CT 206	2.78		
Absorption	CT 206	0.5		
Dry Rodded Unit Weight, pcf	CT 212	115		
Sand Equivalent	CT 217	85	75 Min.	
Durability	CT 229	80		
Sodium Sulfate Soundness	C-214	<2%	10% Max.	10% Max.
Magnesium Sulfate Soundness	C-88	<1%		15% Max.
Relative Mortar Strength	C-87	110%	95% Min.	
Materials Finer Than No. 200	C-117	<2%	8% Max.	3% Max.
Alkali Silica Reactivity	C-1260	0.01% Innocuous		0.10%

Herb G. A. Wilson, Chief Operating Officer.

Orca Sand & Gravel Ltd. • 6505 Island Highway • Port McNeill • BC • V0N 2R0
Telephone: (604) 628-3353 Facsimile: (604) 628 3354

Grace Construction Products

W.R. Grace & Co. - Conn.
293 Wright Brothers Avenue
Livermore, CA 94550

T 925-443-9700

www.graceconstruction.com

3/26/2009

Erick Francisco
Cemex
4750 Norris Canyon Rd Ste A
San Ramon, California 94583

Project Name: Various
Product Selected: ADVA® 140

This is to certify that the ADVA 140, a High Range Water Reducer, as manufactured and supplied by Grace Construction Products, W.R. Grace & Co. – Conn., is formulated to comply with the Specifications for Chemical Admixtures for Concrete, ASTM: C494, Type A, F, AASHTO: M194, Type A, F.

ADVA 140 does not contain calcium chloride or chloride containing compounds as a functional ingredient. Chloride ions may be present in trace amounts contributed from the process water used in manufacturing.

The foregoing is in addition to and not in substitution for our standard Conditions of Sale attached.

Mike Gardner
Western Region Technical Services Manager

Grace Construction Products

W.R. Grace & Co. – Conn.
293 Wright Brothers Avenue
Livermore, CA 94550

T 925-443-9700

www.graceconstruction.com

3/24/2009

Eric Waisanen
CEMEX
4750 Norris Canyon Rd.
San Ramon, California 94583

Project Name: Various
Product Selected: WRDA® 64

This is to certify that the WRDA 64, a Water Reducer, as manufactured and supplied by Grace Construction Products, W.R. Grace & Co. – Conn., is formulated to comply with the Specifications for Chemical Admixtures for Concrete, ASTM: C494, Type A, D, AASHTO: M194, Type A, D.

WRDA 64 does not contain calcium chloride or chloride containing compounds as a functional ingredient. Chloride ions may be present in trace amounts contributed from the process water used in manufacturing.

The foregoing is in addition to and not in substitution for our standard Conditions of Sale attached.

Mike Gardner
Western Region Technical Services Manager

Grace Construction Products

W.R. Grace & Co. – Conn.
293 Wright Brothers Avenue
Livermore, CA 94550

T 925-443-9700

www.graceconstruction.com

3/24/2009

Eric Waisanen
CEMEX
4750 Norris Canyon Rd.
San Ramon, California 94583

Project Name: Various
Product Selected: Recover®

This is to certify that the Recover, a Hydration Stabilizer, as manufactured and supplied by Grace Construction Products, W.R. Grace & Co. – Conn., is formulated to comply with the Specifications for Chemical Admixtures for Concrete, ASTM: C494, Type D, AASHTO: M194, Type D.

Recover does not contain calcium chloride or chloride containing compounds as a functional ingredient. Chloride ions may be present in trace amounts contributed from the process water used in manufacturing.

The foregoing is in addition to and not in substitution for our standard Conditions of Sale attached.

Mike Gardner
Western Region Technical Services Manager