STATE OF CALIFORNIA
DEPARTMENT OF TRANSPORTATION

Form HC-10A (Rev. 6/80)

Job Stamp
04-0120F4
SFOBB SAS

Const. Calendar Day No. 714
Project Work Day No. 924
Date **11/26/2008**

Shift Hours Start 7.00 Stop 3:30
Inspector Shift 7:00 AM to 3:30 PM

**ASSISTANT RESIDENT ENGINEER'S**

## CONTRACTOR – ABFJV

RECD *09 JAN-05 #008203

EQUIPMENT AND/OR LABOR:

| Equip. # | NO. MEN | DESCRIPTION (Of Equipment or Labor) | HOURS - ITEM NO. #38 Str. Concrete, Bridge | # 48 Bar Reinforcement Steel | | | | | | | | IDLE OR DOWN | REMARKS Name | Contractor |
|---|---|---|---|---|---|---|---|---|---|---|---|---|---|---|
| 1 | 1 | Gen. Foreman | | | | | | | | | | | Terry Cronk | ABF E2 |
| 2 | 1 | Pile Driver | | | | | | | | | | | Tony Crieghton | ABF E2 |
| 3 | 1 | Pile Driver | | | | | | | | | | | George Mcneil | ABF E2 |
| 4 | 1 | Laborer | 8 | | | | | | | | | | Jose Molina | ABF |
| 5 | 1 | Laborer | 8 | | | | | | | | | | Rigiberto Campos | ABF |
| 6 | 1 | Pile Driver J/M | 8 | | | | | | | | | | Audre Hudson | ABF |
| 7 | 1 | Pile Driver/Welder | 8 | | | | | | | | | | Henry Wheat | ABF |
| 8 | 1 | Elevator Operator | | | | | | | | | | | Howard Schroyer | ABF vacation |
| 9 | 1 | Pile Driver Foreman | 8 | | | | | | | | | | Nigel Lohse | ABF |
| 10 | 1 | Pile Driver | 8 | | | | | | | | | | Aaron Gilpatrick | ABF |
| 11 | 1 | Pile Driver | 8 | | | | | | | | | | Andrew Adams | ABF |
| 12 | 1 | Pile Driver | 8 | | | | | | | | | | Kurt Chaission | ABF |
| 13 | 1 | Pile Driver | | | | | | | | | | | Jesse Johnasen | ABF E2 |
| 14 | 1 | Crane Operator | 8 | | | | | | | | | | Richard | ABF |
| 15 | 1 | Operator Apprentice/oiler | 8 | | | | | | | | | | Ross Scott | ABF |
| 16 | 1 | Pile Driver | 8 | | | | | | | | | | Abasi Delley | ABF |
| 17 | 1 | Pile Driver | | | | | | | | | | | Kenneth Reynolds | ABF E2 |
| 18 | 1 | Labor | 8 | | | | | | | | | | Joseph Ruiz | ABF |
| 19 | 1 | Elevator Operator Apprentice | 8 | | | | | | | | | | Doug Green | ABF Temp |
| | | Iron workers | | | | | | | | | | | Tim Greenlee etc | ABF/RSC |
| | 1 | Old Crane 1300 | | | | | | | | | | | Crane | ABF |
| | 1 | 1st Man Lift S-125 | | | | | | | | | | | | Hertz Rental |
| | 1 | Lincoln Vantage Welding M/C 768-50-4005 | | | | | | | | | | 8 | | ABF |
| | 1 | Lincoln Vantage Welding M/C 768-50-4009 | | | | | | | | | | 8 | | ABF |
| | 1 | Lincoln Vantage Welding M/C 768-30-4032 | | | | | | | | | | 8 | | Hertz Rental |
| | 1 | Lincoln Vantage Welding M/C 768-30-4014 | | | | | | | | | | | | Hertz Rental, deck |
| | 1 | MQ Power Generator 220 | | | | | | | | | | | | ABF Main power |
| | 1 | MQ Whisper Watt 7000 549-07-5006 | | | | | | | | | | | | ABF deck |



46.02

| | | | | | | | | | | | | | | |
|---|---|---|---|---|---|---|---|---|---|---|---|---|---|---|
| | 1 | MQ Whisper Watt 7000 549-20-4007 | | | | | | | | | | | | ABF |
| | 1 | MQ Whisper Watt 7000 549-20-4044 | | | | | | | | | | 8 | | ABF |
| | 1 | Ingersoll Rand Air compressor 20-2183 | | | | | | | | | | 8 | | ABF central |
| | 1 | Ingersoll Rand Air Compressor 006-18-4293 | | | | | | | | | | 8 | | ABF |
| | 1 | Ingersoll Rand Air Compressor 185R | | | | | | | | | | 8 | | ABF Deck |
| | 1 | Ingersoll Rand Air Compressor 006-18-4297 | | | | | | | | | | 8 | | ABF |
| | 1 | Ingersoll Rand Flood Lights 536-40-6831 | | | | | | | | | | | | ABF power |
| | 1 | Genie 541-4000N Flood Lights 536-40-7044 | | | | | | | | | | | | ABF |
| | 1 | Genie 541-4000N Flood Lights 536-40-4839 | | | | | | | | | | | | ABF |
| | 1 | Genie 541-4000N Flood Lights 536-40-4843 | | | | | | | | | | | | ABF |
| | 1 | Genie 541-4000N Flood | | | | | | | | | | | | ABF |
| | 1 | Genie 541-4000N Flood | | | | | | | | | | | | ABF deck power |
| | 1 | Forklift Hertz Rental 544D-10 | 8 | | | | | | | | | | | ABF |
| | 1 | Pickup | 8 | | | | | | | | | | | ABF |
| | 1 | Elevator | 8 | | | | | | | | | | | ABF |

**Weather**: Coudy morning, slightlywindy & cold, High 61F Low 48F, Rain started around 10 AM.

**Description of Operation:**

Iron workers are working for Pour 5.
They are installing the rebars.
They are installing the longitudinal ducts off the east wall to the cages.

ABF continues installing the Thermal Control Piping for Pour-5.
ABF continues cleaning up on the top and at the ground level.

ABF continues sand blasting the Pour-4 rebars and surface. Today they are trying to remove all the used blasting sand from the pour 4 area before the rains begin.

As of now, 14 transverse ducts to need to be connected on north end on the top and 6 longitudinal ducts on the south side. CBT 1 through 8 are all done. CBT 9 through 22 are to be connected. CBT 23 through 36 are done. Longitudinal ducts 1B to 5B and 43 are yet to be installed. See drawings 462, 463, 464 and 470.

ABF surveyors are working marking elevations on the rebars for concrete pour.

It started raining in the late morning. RSC left about 11 AM and ABF stopped working at noon time.

## Additional Work at or outside of the W2 Site:

a) The contractor continues to erect trusses for Temporary Towers A & B on E-Line.
b) ABF is removing the rocks at Tower C location. The removed locations will be filled with native soils removed originally and sitting on spoils near by.
c) The Safety Meeting generally held on Thursdays was rescheduled for today at 8 AM because of Thanks Giving Holiday tomorrow. Mohammed Awal made presentation on grouting operations, its hazards and safety precautions to be taken before and during grouting operations.
d) The Concrete Meeting scheduled for 8 AM today was postponed to 9 AM today because of Safety Meeting. Informed Jim Davidson of this. He agreed of this after checking the availability of WDC Conference Room.
    - Jim Davidson informed that SDI is coordinating to have CT pickup Samples in Europe.
    - W2's Pour 5 seems to on schedule.
    - For E2, Boom support Calculations are being checked by CT's Francis.

- ABF got punch list for E2's pour.
- There are 5 new RFIs and all RFIs are being addressed by CT.
- There is no change in schedules for pours at W2 and E2.
- Gil informed Jim that there should be no equipment on the SKWY. There are lot of tire marks by ABF equipment and ABF will have to clean these.
- Curing for E2 will be per plan.
- ABF will review the Cap forms and will install the thermal blankets.
- Gil asked to double check the time limit imposed.
- A Pre-pour meeting will be held on Wednesday at 1:30 PM.
- ABF already has a chiller and Cooling equipment on site.
- The chiller will be started on Wednesday.
- ABF is fixing all the thermal control piping.
- RSC will most likely be out on Monday.
- The 1st concrete truck will be on site on Friday 12/5/08 at 9 PM.
- There will be 2 pumps.
- The concreting will start on SW side.
- Dave Dave Adams is checking the elevations.
- Gil will double check that CC Myers is not concreting on the same weekend.

Lalit Mathur, P.E. Trans Engineer (D)/Asst. Struct. Rep

| DISTRICT | COUNTY | ROUTE | KILOMETER POST TOTAL PROJECT | SHEET NO. | TOTAL SHEETS |
|---|---|---|---|---|---|
| 04 | SF | 80 | 13.2/13.9 | 462R3 | 1204 |

Caltrans now has a web site! To get to the web site, go to: http://www.dot.ca.gov

| MARK | DATE | DESCRIPTIONS | BY | CH'D | CCO# |
|---|---|---|---|---|---|
| 3 | 05/04/07 | W2 CAP BEAM ISD RESOLUTION | JD | AS | 3451 |
| 2 | 01/31/07 | CORROSION PROTECTION | JD | AS | 16 |
| 1 | 07/21/06 | W2 CAP BEAM ISD | JD | NV | 23 |

REVISIONS

CONTRACT CHANGE ORDER NO. ____
SHEET ____ OF ____

FOR REVISIONS ONLY

REGISTERED ENGINEER - CIVIL

12-6-04
PLANS APPROVAL DATE

The State of California or its officers or agents shall not be responsible for the accuracy or completeness of electronic copies of this plan sheet.

T.Y. LIN / MOFFATT & NICHOL
825 BATTERY STREET
SAN FRANCISCO, CA 94111

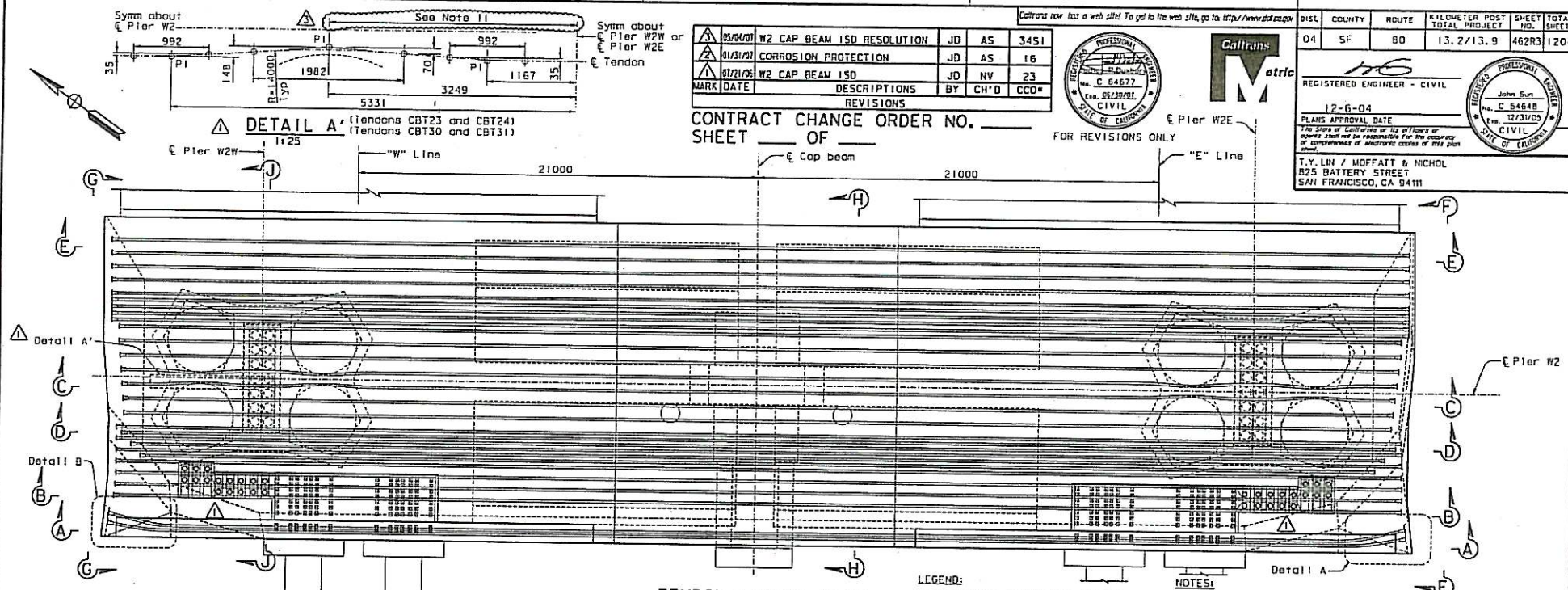


DETAIL A'
1:25
(Tendons CBT23 and CBT24)
(Tendons CBT30 and CBT31)

TENDON LAYOUT PLAN
1:100
(W2 Cap Beam Continuity PT Tendons not shown for clarity)

LEGEND:
CBT-Cap Beam Transverse Tendon

NOTES:

1. All W2 cap beam transverse tendons are ASTM A416 Grade 270 (fu=1860 MPa), low relaxation, 27-15 Dia seven wire strand PT, unless specified otherwise. For additional prestressing details, see "Prestressing Notes" sheet.
2. For Section A-A, see "W2 Cap Beam Post-Tensioning Details No.2" sheet.
3. For Sections B-B through E-E, see "W2 Cap Beam Post-Tensioning Details No.3" sheet.
4. For Sections F-F through J-J, see "W2 Cap Beam Post-Tensioning Details No.4" sheet.
5. For bikepath details near cap beam, see "Bikepath Details" sheets.
6. For PT blockout dimensions, see "W2 Cap Beam Blockout Details" sheets.
7. Jacking force in the W2 cap beam transverse tendons (CBT1-CBT36) shall be 5265 kN typical.
8. For general stressing sequence, see "Pier W2 Construction Sequence" sheet.
9. For "W2 Cap Beam Post-Tensioning Details" sheets, the Contractor shall verify all controlling field dimensions before ordering or fabricating any material.
10. W2 cap beam elevations are to top of finished concrete and do not include overlay thickness.

ALL DIMENSIONS ARE IN MILLIMETERS UNLESS OTHERWISE SHOWN

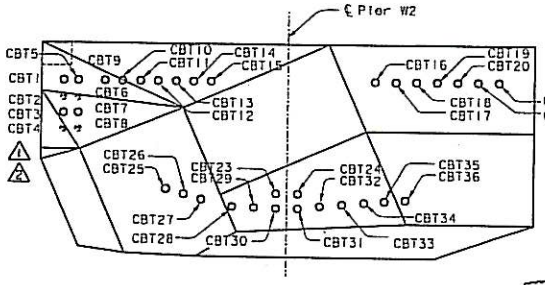


TENDON DESIGNATION
1:80

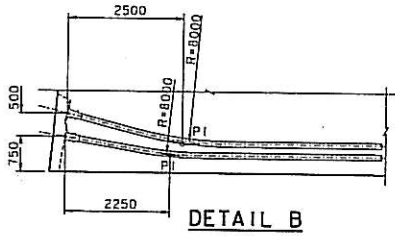


DETAIL B
1:50
(Tendons CBT1 and CBT5)
(Tendons CBT2 thru CBT8 similar)

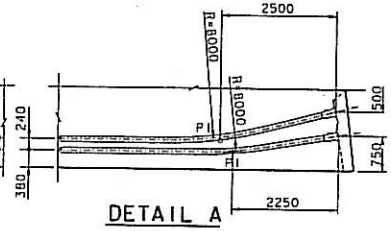


DETAIL A
1:50
(Tendons CBT1 and CBT5)
(Tendons CBT2 thru CBT8 similar)

11. At the Contractor's option, the tendon profile may be straightened, subject to review and approval of the Engineer.

A. Valizadeh/V. Tsan/Y.L./W.L./F.C.
DESIGN OVERSIGHT
Y. Lin
SIGN OFF DATE 05/04/07

| | | | |
|---|---|---|---|
| DESIGN | BY J. Sun | CHECKED M. Chen | |
| DETAILS | BY J. Duxbury | CHECKED M. Chen | |
| QUANTITIES | BY S. Shi | CHECKED D. Harrison | |

PREPARED FOR THE STATE OF CALIFORNIA DEPARTMENT OF TRANSPORTATION

A. Manzanarez
PROJECT ENGINEER

BRIDGE NO. 34-0006L/R
KILOMETER POST 13.2/13.9

CU 04
EA 0120F1

SAN FRANCISCO OAKLAND BAY BRIDGE
EAST SPAN SEISMIC SAFETY PROJECT
SELF-ANCHORED SUSPENSION BRIDGE
(SUPERSTRUCTURE & TOWER)

# W2 CAP BEAM POST-TENSIONING DETAILS NO. 1

SHEET 045R3

Rev. Date: 3-18-98

ORIGINAL SCALE IN MILLIMETERS FOR REDUCED PLANS

DISREGARD PRINTS BEARING EARLIER REVISION DATES

FILE => I:\bb\04-0120f1\sds\contract plans and ccos\ccos in progress\cco*34s1\bbccp101.dgn

DATE PLOTTED => 22 MAY 2007 TIME PLOTTED => 12:25:14

USERNAME => jsun

100 % PSAE

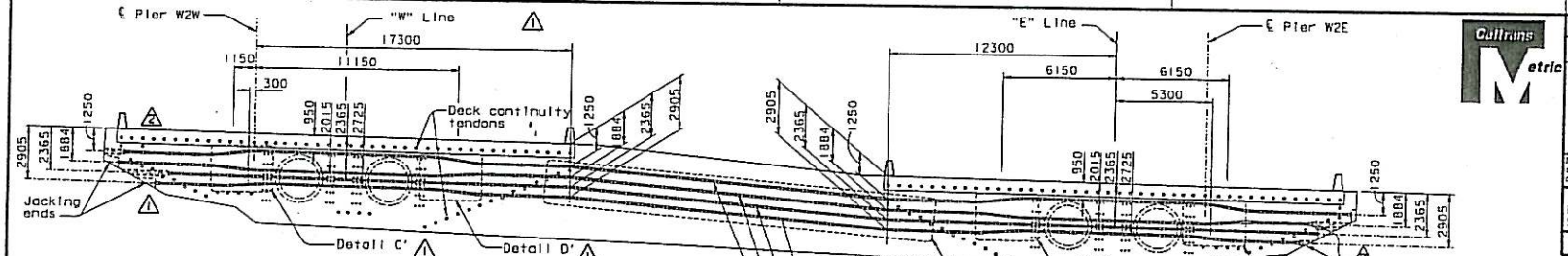


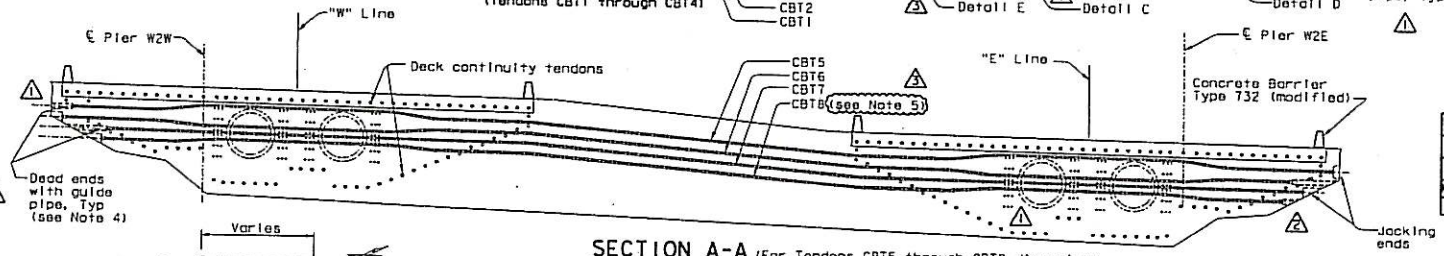


## SECTION A-A

1:125 (For Tendons CBT5 through CBT8 dimensions, see Tendon CBT1 through CBT4 dimensions)

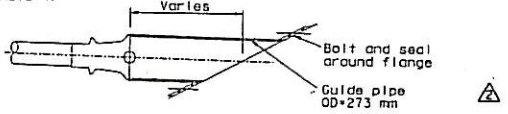


## DEAD END GUIDE PIPE

NTS (see Note 4)

NOTES:

5. CBT ducts 4 and 8 may be spliced through Jacking Frame Blocking Installation Blockout. For Jacking Frame opening details, see "W2 Cap Beam Dimension Details No. 3" sheet.

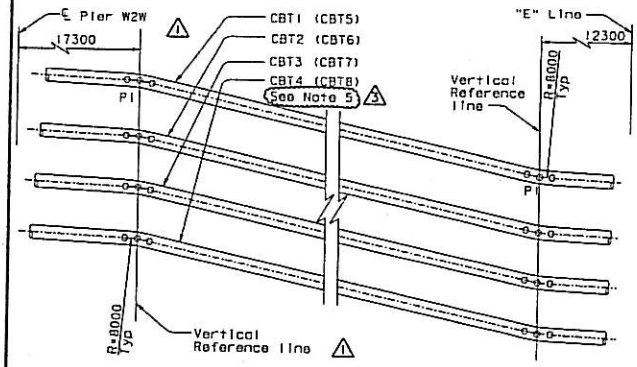


## DETAIL E

NTS

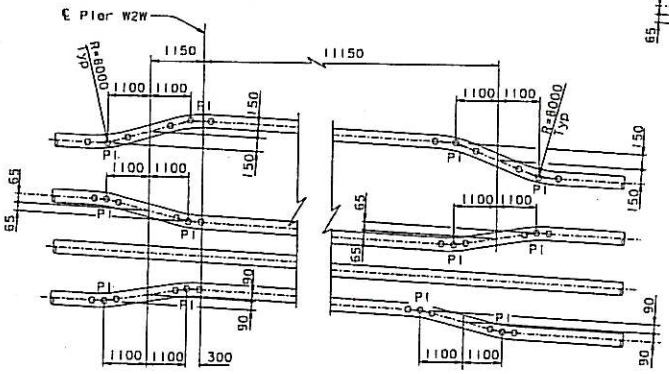


## DETAIL C'

NTS

## DETAIL D'

NTS

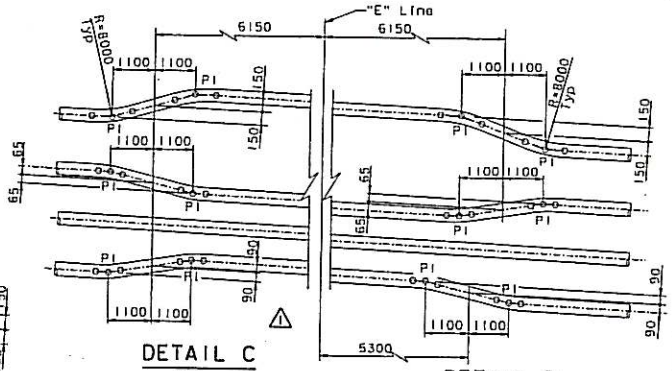


## DETAIL C

NTS

## DETAIL D

NTS

NOTES:

1. For additional details, see "W2 Cap Beam Post-Tensioning Details No.1" sheet.
2. For PT blockout details, see "W2 Cap Beam Blockout Details" sheets.
3. For deck continuity tendon details, see "W2 Cap Beam Post-Tensioning Details No.5" through "W2 Cap Beam Post-Tensioning Details No.12" sheets.
4. Contractor shall coordinate the dead end guide pipe details with the PT System Supplier and shall submit them to the Engineer for review and approval. Contractor shall grout the guide pipe after stressing operations have been completed.

ALL DIMENSIONS ARE IN MILLIMETERS UNLESS OTHERWISE SHOWN

| DISTRICT | COUNTY | ROUTE | KILOMETER POST TOTAL PROJECT | SHEET NO. | TOTAL SHEETS |
|---|---|---|---|---|---|
| 04 | SF | 80 | 13.2/13.9 | 463R3 | 1204 |

REGISTERED ENGINEER - CIVIL

12-6-04

PLANS APPROVAL DATE

The State of California or its officers or agents shall not be responsible for the accuracy or completeness of electronic copies of this plan sheet.

REGISTERED PROFESSIONAL ENGINEER John Sun No. C 54648 Exp. 12/31/05 CIVIL STATE OF CALIFORNIA

T.Y. LIN / MOFFATT & NICHOL
825 BATTERY STREET
SAN FRANCISCO, CA 94111

Caltrans now has a web site! To get to the web site, go to: http://www.dot.ca.gov

REGISTERED PROFESSIONAL ENGINEER No. C 64677 Exp. 06/30/07 CIVIL STATE OF CALIFORNIA

FOR REVISIONS ONLY

| MARK | DATE | DESCRIPTIONS | BY | CH'D | CCO# |
|---|---|---|---|---|---|
| 3 | 05/04/07 | W2 CAP BEAM ISD RESOLUTION | JD | AS | 3451 |
| 2 | 01/31/06 | CORROSION PROTECTION | JD | AS | 16 |
| 1 | 01/21/06 | W2 CAP BEAM ISD | JD | NV | 23 |

REVISIONS

A. Vaziazadeh/V. Tsan/Y.L./W.L./F.C.
DESIGN OVERSIGHT
SIGN OFF DATE 05/04/07
Rev. Date: 3-15-05

| | | | |
|---|---|---|---|
| DESIGN | BY J. Sun | CHECKED W. Chen | |
| DETAILS | BY J. Duxbury | CHECKED W. Chen | |
| QUANTITIES | BY S. Shi | CHECKED D. Harrison | |

PREPARED FOR THE STATE OF CALIFORNIA DEPARTMENT OF TRANSPORTATION

R. Manzanarez
PROJECT ENGINEER

BRIDGE NO. 34-0006L/R
KILOMETER POST 13.2/13.9

ORIGINAL SCALE IN MILLIMETERS FOR REDUCED PLANS

CU 04
EA 0120F1

DISREGARD PRINTS BEARING EARLIER REVISION DATES

REVISION DATES (PRELIMINARY STAGE ONLY)

SAN FRANCISCO OAKLAND BAY BRIDGE
EAST SPAN SEISMIC SAFETY PROJECT
SELF-ANCHORED SUSPENSION BRIDGE
(SUPERSTRUCTURE & TOWER)

# W2 CAP BEAM POST-TENSIONING DETAILS NO. 2

SHEET 046R3

FILE => I:\DD\04-01201\sds\contract plans and ccs\ccs\in progress\ccs*3451\dsccp102.dgn

DATE PLOTTED => 22 MAY 2007 TIME PLOTTED => 12:10:55

USERNAME => pbrown

100% PS&E

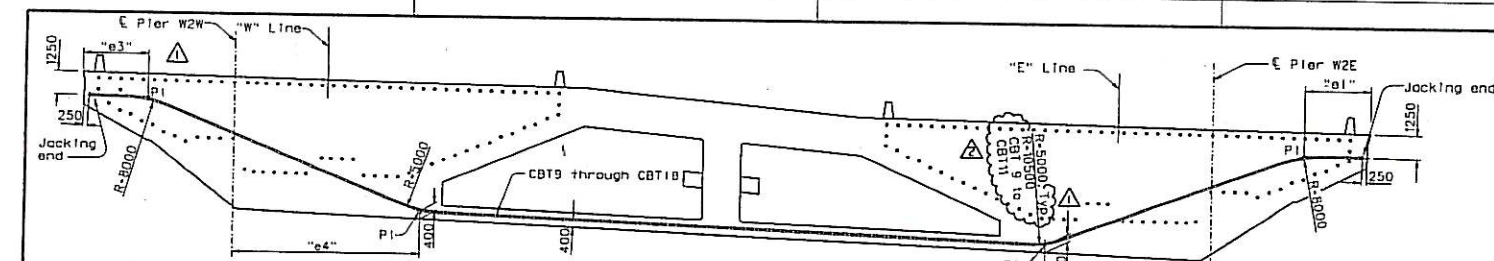


SECTION B-B
1:125

Tendon CBT9 shown for CBT10 through CBT18 see Table

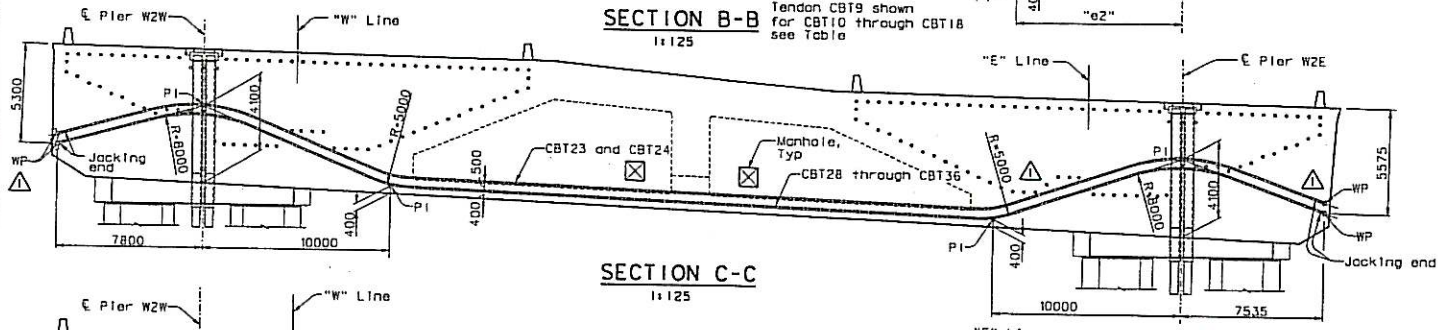


SECTION C-C
1:125

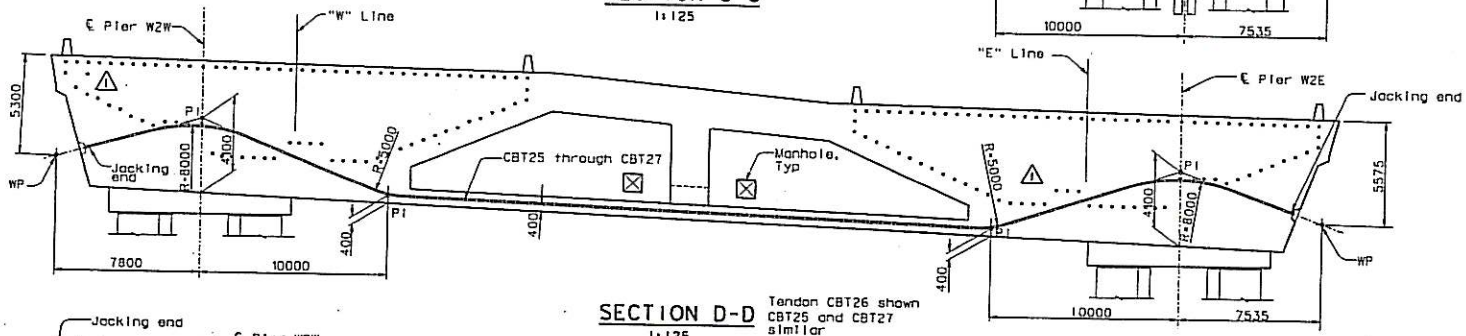


SECTION D-D
1:125

Tendon CBT26 shown CBT25 and CBT27 similar

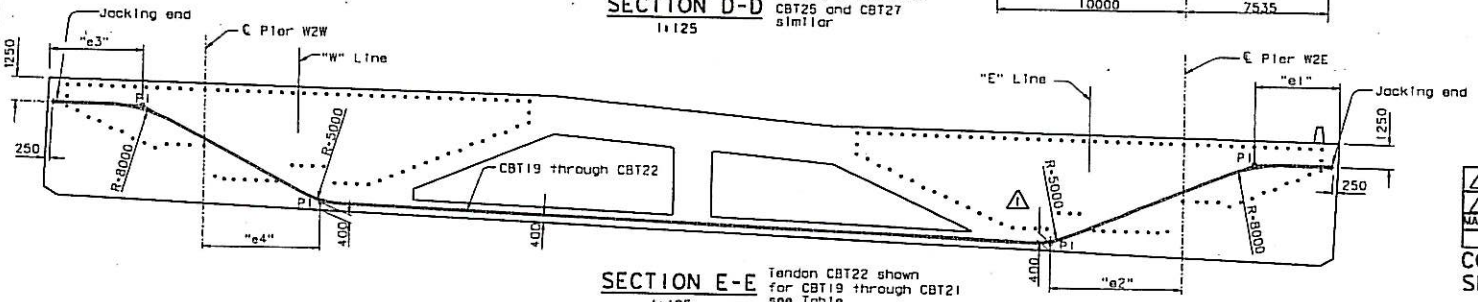


SECTION E-E
1:125

Tendon CBT22 shown for CBT19 through CBT21 see Table

| CBT | e1 | e2 | e3 | e4 |
|---|---|---|---|---|
| 9-12 | 3500 | 9250 | 3500 | 10000 |
| 13-18 | 3500 | 10000 | 3500 | 10000 |
| 19 | 3500 | 10000 | 3500 | 10000 |
| 20 | 3500 | 9000 | 3500 | 8750 |
| 21 | 3500 | 8000 | 3600 | 7500 |
| 22 | 4500 | 7000 | 5000 | 6250 |

NOTES:

1. For additional details, see "W2 Cap Beam Post-Tensioning Details No.1" sheet.
2. For PT blockout details, see "W2 Cap Beam Blockout Details" sheets.

FOR REVISIONS ONLY

| MARK | DATE | DESCRIPTIONS | BY | CH'D | CCO# |
|---|---|---|---|---|---|
| 2 | 02/15/07 | W2 CAP BEAM ISD RESOLUTION | JD | AS | 34 |
| 1 | 01/21/06 | W2 CAP BEAM ISD | JD | NV | 23 |

REVISIONS

CONTRACT CHANGE ORDER NO. ____
SHEET ___ OF ___

ALL DIMENSIONS ARE IN MILLIMETERS UNLESS OTHERWISE SHOWN

| DISC | COUNTY | ROUTE | KILOMETER POST TOTAL PROJECT | SHEET NO. | TOTAL SHEETS |
|---|---|---|---|---|---|
| 04 | SF | 80 | 13.2/13.9 | 464R2 | 1204 |

REGISTERED ENGINEER - CIVIL
12-6-04
PLANS APPROVAL DATE

The State of California or its officers or agents shall not be responsible for the accuracy or completeness of electronic copies of this plan sheet.

T.Y. LIN / MOFFATT & NICHOL
825 BATTERY STREET
SAN FRANCISCO, CA 94111

Caltrans now has a web site! To get to the web site, go to: http://www.dot.ca.gov

R. Vallizadeh/Y. Tsan/Y.L./W.L./F.C.
DESIGN OVERSIGHT
SIGN OFF DATE 02/16/07

| | | | |
|---|---|---|---|
| DESIGN | BY J. Sun | CHECKED M. Chen | |
| DETAILS | BY J. Duxbury | CHECKED M. Chen | |
| QUANTITIES | BY S. Shi | CHECKED D. Harrison | |

PREPARED FOR THE STATE OF CALIFORNIA DEPARTMENT OF TRANSPORTATION

R. Menzanarez
PROJECT ENGINEER

BRIDGE NO. 34-0006L/R
KILOMETER POST 13.2/13.9

CU 04
EA 0120F1

SAN FRANCISCO OAKLAND BAY BRIDGE
EAST SPAN SEISMIC SAFETY PROJECT
SELF-ANCHORED SUSPENSION BRIDGE
(SUPERSTRUCTURE & TOWER)

# W2 CAP BEAM POST-TENSIONING DETAILS NO. 3

SHEET 047R2

ORIGINAL SCALE IN MILLIMETERS FOR REDUCED PLANS

DISREGARD PRINTS BEARING EARLIER REVISION DATES

FILE => f:\oba\04-012001\sas\contract plans and ccs\ccs\in progress\ccs*34\sacpt03.dgn

USERNAME => oldmanpaie PLOTTED => 16 MAR 2007 TIME PLOTTED => 07:41:16

100 % PS&E

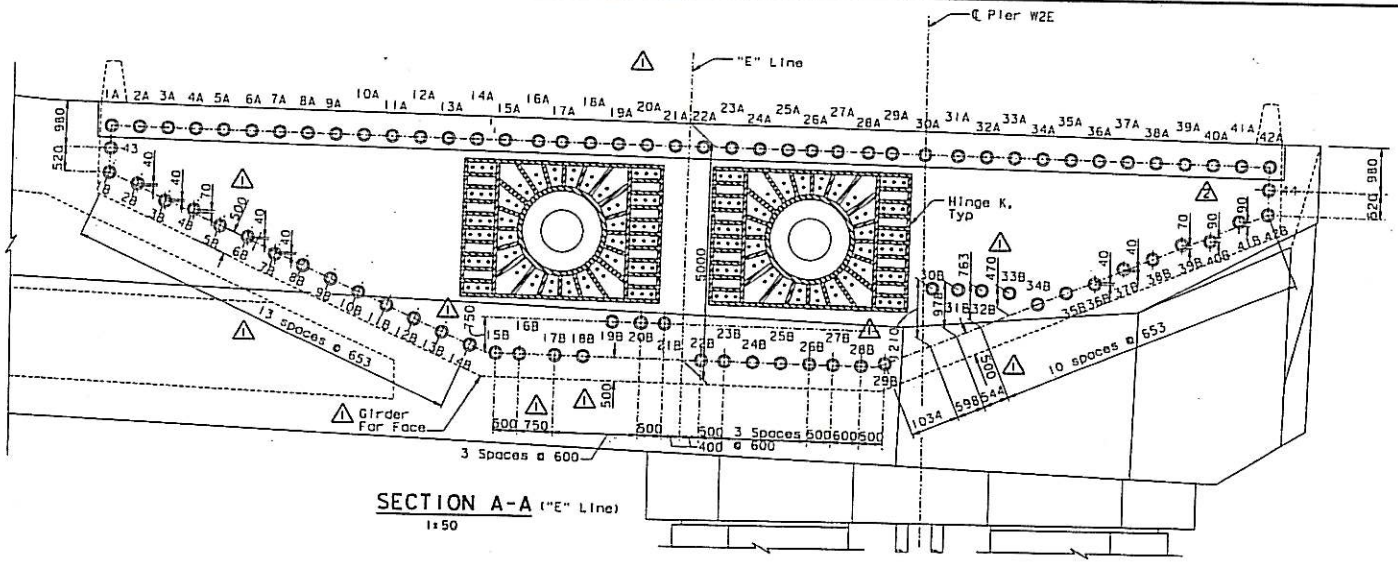


SECTION A-A ("E" Line)
1:50

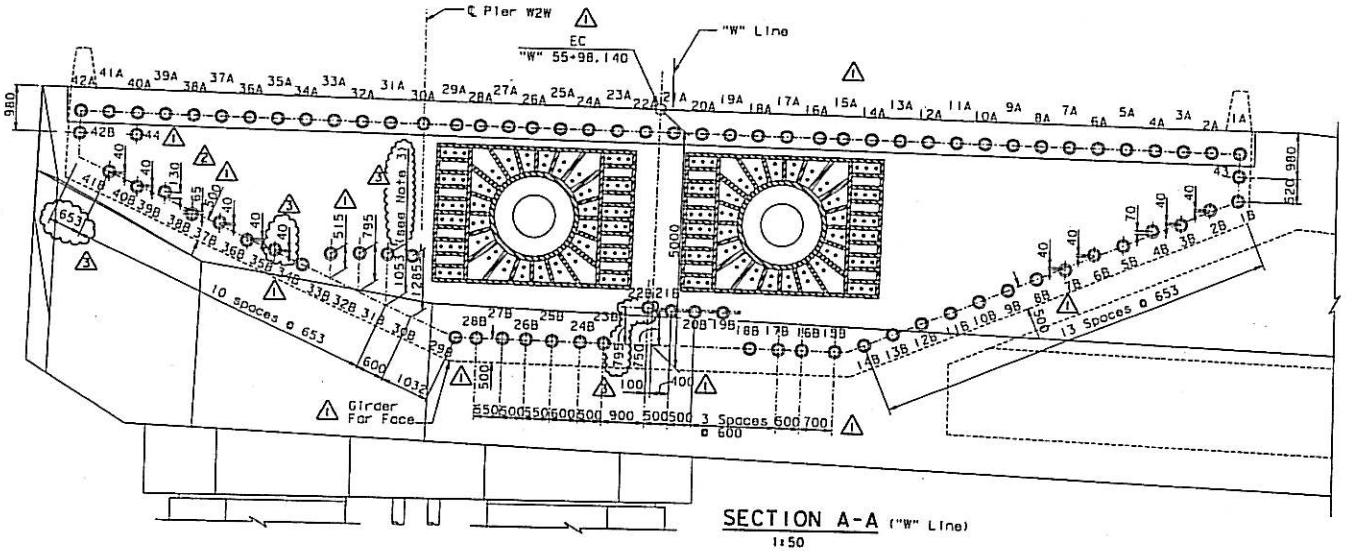


SECTION A-A ("W" Line)
1:50

NOTES:

1. For additional details, see "W2 Cap Beam Post-Tensioning Details No. 5" and "W2 Cap Beam Post-Tensioning Details No. 7" sheets.
2. Jacking force in the W2 cap beam continuity tendons (1A-42A, 1B-42B, 43 & 44) shall be 5265 kN typical.
3. Offset dimensions are measured perpendicular to a 2% slope, typical.

FOR REVISIONS ONLY

| MARK | DATE | DESCRIPTIONS | BY | CH'D | CCO# |
|---|---|---|---|---|---|
| 3 | 02/16/07 | W2 CAP BEAM ISD RESOLUTION | JD | AS | 34 |
| 2 | 01/31/07 | CORROSION PROTECTION | JD | AS | 16 |
| 1 | 07/21/06 | W2 CAP BEAM ISD | JD | NV | 23 |

REVISIONS

CONTRACT CHANGE ORDER NO. ____
SHEET ____ OF ____

100 % PS&E

| DIST. | COUNTY | ROUTE | KILOMETER POST TOTAL PROJECT | SHEET NO. | TOTAL SHEETS |
|---|---|---|---|---|---|
| 04 | SF | 80 | 13.2/13.9 | 470R3 | 1204 |

REGISTERED ENGINEER - CIVIL
12-6-04
PLANS APPROVAL DATE

The State of California or its officers or agents shall not be responsible for the accuracy or completeness of electronic copies of this plan sheet.

T.Y. LIN / MOFFATT & NICHOL
825 BATTERY STREET
SAN FRANCISCO, CA 94111

Caltrans now has a web site! To get to the web site, go to: http://www.dot.ca.gov

ALL DIMENSIONS ARE IN MILLIMETERS UNLESS OTHERWISE SHOWN

R. Vdlizadeh/V. Tocn/Y.L./W.L./F.C.
DESIGN OVERSIGHT
Ron Vdlizadeh / Vincent Tocn / Y. Lin
SIGN OFF DATE 02/16/07
Rev. Date: 5-15-98

| | | | |
|---|---|---|---|
| DESIGN | BY J. Sun | CHECKED M. Chen | |
| DETAILS | BY J. Duxbury | CHECKED M. Chen | |
| QUANTITIES | BY S. Shi | CHECKED D. Harrison | |

PREPARED FOR THE STATE OF CALIFORNIA DEPARTMENT OF TRANSPORTATION

R. Manzanarez
PROJECT ENGINEER

BRIDGE NO. 34-0006L/R
KILOMETER POST 13.2/13.9

SAN FRANCISCO OAKLAND BAY BRIDGE
EAST SPAN SEISMIC SAFETY PROJECT
SELF-ANCHORED SUSPENSION BRIDGE
(SUPERSTRUCTURE & TOWER)

# W2 CAP BEAM POST-TENSIONING DETAILS NO. 9

ORIGINAL SCALE IN MILLIMETERS FOR REDUCED PLANS 0 10 20 30 40 50 60 70 80 90 100

CU 04
EA 0120F1

DISREGARD PRINTS BEARING EARLIER REVISION DATES

REVISION DATES (PRELIMINARY STAGE ONLY)

SHEET 053R3

FILE => f:\bb\04-012001\sds\contract plans and cco\cco\in progress\cco=34\aecp109.dgn

USERNAME => allshansky DATE PLOTTED => 16 MAR 2007 TIME PLOTTED => 07:50:57